Gas Discharge Tube

GDT

- Fast Response
- Low Capacitance
- High Current Rating
- High Insulation Resistance
- Stable Performance Over Surface Life
- RoHS & REACH Compliant

Please refer to the datasheet of each series.

https://setsafe.com/Products/Over-Voltage-Protection/Gas-Discharge-Tube-GDT.html

2026

SET safe | SET fuse

Providing Total Solution for High Standard Safety Circuit Protection

Gas Discharge Tube（GDT）

Gas Discharge Tube (GDT) is a single-gap or multi-gap switching overvoltage protection device. Under normal circumstances, the GDT is in a high-impedance state; when suffer a surge, the GDT will change from a high-impedance state to a low-impedance state, and release the surge energy to the ground, reducing the residual voltage of the circuit, thereby protecting the equipment circuit or protect the human body from the hazards of transient overvoltage. GDT is formed by high-temperature sealing of metal electrodes, metallized ceramics, inert gas or other mixed gases.

Gas Discharge Tube (GDT) are widely used in overvoltage protection of signals, power supplies and various ports.

SETsafe | SETfuse's Gas Discharge Tube products have a voltage of 70 ~ 4500 V, a flow (@8/20 μs) 0.5 ~ 200 kA, a full range of safety certifications including: UL, cUL, TUV, and meet the RoHS, REACH requirements.

All Rights Reserved by Xiamen SET Electronics Co., Ltd. 2024-2026 V1.1

Catalogue

1 Feature & Model List Overview 1

2 Glossary 5

3 Attention 7

4 Product Series 8

Description, Feature, Applications, Structure Diagrams, Electrical Characteristics, Reference Curve for Spark-over Voltage, Curve for Impulse Discharge Current, Application Example, Recommended Hand-soldering Parameters, Wave Soldering Parameters, Reflow Soldering Parameters.

4.1 SZxxxx-SMD series 13

4.2 SWxxxx-SMD series 16

4.3 SXxxxx-SMD series 19

4.4 SYxxxx-SMD series 22

4.5 SNxxxx-SMD series 25

4.6 SUxxxx-SMD series 28

4.7 SSxxxx-SMD series 31

4.8 SDxxxx-SMD series 34

4.9 SExxxx-SMD series 37

4.10 SKxxxx-SMD series 40

4.11 SCxxxx-SMD series 43

4.12 SFxxxx-SMD series 46

4.13 TSxxxx-SMD series 49

4.14 TZxxxx-SMD series 52

4.15 TYxxxx-SMD series 55

4.16 TRxxxx-SMD series 58

4.17 SDxxxx-L series 61

All Rights Reserved by Xiamen SET Electronics Co., Ltd. 2024-2026 V1.1

4.18 SFxxxx-L series 64
4.19 SExxxx-L series 67
4.20 TZxxxx-L series 70
4.21 TBxxxx-L series 73
4.22 TRxxxx-L series 76
4.23 SPAxxxx-xx series 79
4.24 SPBxxxx-xx series 82
4.25 SPCxxxx-xx series 86
4.26 SPJxxxx-xx series 89
4.27 SPIxxxx-xx series 92
4.28 SPHxxxx-xx series 95
4.29 SPKxxxx-xx series 98
4.30 SPPxxxx-xx series 101
4.31 SPRxxxx-xx series 104
4.32 SPSxxxx-xx series 107
4.33 SPVxxxx-xx series 110
4.34 SPZxxxx-xx series 113
4.35 SPOxxxx-xx series 116
4.36 TPAxxxx-xx series 119

All Rights Reserved by Xiamen SET Electronics Co., Ltd. 2024-2026 V1.1

Gas Discharge Tube (GDT) Features & Model List Overview

DC Spark-over Voltage (V) \ Model	13	16	19	22	25	28	31	34	37
4500	○	○	○	○	○	○	○	○	SE (-SMD)
4000	○	○	○	○	○	○	○	○	SE (-SMD)
3600	○	○	○	○	○	○	○	○	SE (-SMD)
3000	○	○	○	○	○	○	○	○	SE (-SMD)
2500	○	○	○	○	○	○	○	○	SE (-SMD)
2000	○	○	○	○	○	○	○	○	SE (-SMD)
1500	○	○	○	○	○	○	○	○	SE (-SMD)
1200	○	○	○	○	○	○	○	○	SE (-SMD)
1000	○	○	○	○	○	○	○	○	SE (-SMD)
800	○	SW (-SMD)	SX (-SMD)	SY (-SMD)	SN (-SMD)	SU (-SMD)	SS (-SMD)	SD (-SMD)	SE (-SMD)
600	○	SW (-SMD)	SX (-SMD)	SY (-SMD)	SN (-SMD)	SU (-SMD)	SS (-SMD)	SD (-SMD)	SE (-SMD)
470	○	SW (-SMD)	SX (-SMD)	SY (-SMD)	SN (-SMD)	SU (-SMD)	SS (-SMD)	SD (-SMD)	SE (-SMD)
420	○	SW (-SMD)	SX (-SMD)	SY (-SMD)	SN (-SMD)	SU (-SMD)	SS (-SMD)	SD (-SMD)	SE (-SMD)
400	SZ (-SMD)	SW (-SMD)	SX (-SMD)	SY (-SMD)	SN (-SMD)	○	○	○	○
350	○	SW (-SMD)	SX (-SMD)	SY (-SMD)	SN (-SMD)	SU (-SMD)	SS (-SMD)	SD (-SMD)	SE (-SMD)
300	SZ (-SMD)	SW (-SMD)	SX (-SMD)	SY (-SMD)	SN (-SMD)	○	○	○	○
250	○	○	○	○	○	SU (-SMD)	SS (-SMD)	SD (-SMD)	SE (-SMD)
230	SZ (-SMD)	SW (-SMD)	SX (-SMD)	SY (-SMD)	SN (-SMD)	SU (-SMD)	SS (-SMD)	SD (-SMD)	SE (-SMD)
200	SZ (-SMD)	SW (-SMD)	SX (-SMD)	SY (-SMD)	SN (-SMD)	○	○	○	○
150	SZ (-SMD)	SW (-SMD)	SX (-SMD)	SY (-SMD)	SN (-SMD)	SU (-SMD)	SS (-SMD)	SD (-SMD)	SE (-SMD)
90	SZ (-SMD)	SW (-SMD)	SX (-SMD)	SY (-SMD)	SN (-SMD)	SU (-SMD)	SS (-SMD)	SD (-SMD)	SE (-SMD)
75	○	SW (-SMD)	SX (-SMD)	SY (-SMD)	SN (-SMD)	○	SS (-SMD)	SD (-SMD)	SE (-SMD)
70	○	○	○	○	SN (-SMD)	○	SS (-SMD)	SD (-SMD)	SE (-SMD)
Size (mm)	3.2 × 1.6 × 1.6	3.2 × 2.5 × 2.5	4.5 × 3.2 × 2.7	4.0 x 3.5 x 3.5	4.2 × 5.0 × 5.0	5.0 × 5.4 × 5.4	4.2 x 6.2 × 6.2	5.0 × 5.4 × 5.4	6.0 × 8.3 × 8.3
I_n (8/20 μs) (kA) Impulse Discharge Current	0.5	1	1 / 2	3	5	5 / 10	5	5	5 / 10 / 20
Product Structure								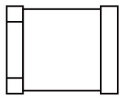	

SMD

All Rights Reserved by Xiamen SET Electronics Co., Ltd. 2024-2026 V1.1

Gas Discharge Tube (GDT) Features & Model List Overview

DC Spark-over Voltage (V) \ Model	40	43	46	49	52	55
4500	○	○	SF (-SMD)	○	○	○	○
4000	○	○	SF (-SMD)	○	○	○	○
3600	○	○	SF (-SMD)	○	○	○	○
3000	○	○	SF (-SMD)	○	○	○	○
2500	○	○	SF (-SMD)	○	○	○	○
2000	○	○	SF (-SMD)	○	○	○	○
1500	○	○	SF (-SMD)	○	○	○	○
1200	○	○	SF (-SMD)	○	○	○	○
1000	SK (-SMD)	○	SF (-SMD)	○	○	○	○
800	SK (-SMD)	SC (-SMD)	SF (-SMD)	○	○	○	○
600	SK (-SMD)	SC (-SMD)	SF (-SMD)	TS (-SMD)	TZ (-SMD)	TY (-SMD)	TR (-SMD)
470	○	SC (-SMD)	SF (-SMD)	TS (-SMD)	TZ (-SMD)	○	TR (-SMD)
420	SK (-SMD)	SC (-SMD)	SF (-SMD)	TS (-SMD)	TZ (-SMD)	TY (-SMD)	TR (-SMD)
400	○	○	○	○	○	○	○
350	SK (-SMD)	SC (-SMD)	SF (-SMD)	○	TZ (-SMD)	TY (-SMD)	TR (-SMD)
300	○	○	○	TS (-SMD)	○	○	○
250	○	SC (-SMD)	SF (-SMD)	○	○	TY (-SMD)	○
230	○	SC (-SMD)	SF (-SMD)	TS (-SMD)	TZ (-SMD)	TY (-SMD)	TR (-SMD)
200	○	○	○	TS (-SMD)	TZ (-SMD)	○	○
150	○	SC (-SMD)	SF (-SMD)	TS (-SMD)	TZ (-SMD)	○	TR (-SMD)
90	SK (-SMD)	SC (-SMD)	SF (-SMD)	TS (-SMD)	TZ (-SMD)	○	TR (-SMD)
75	○	SC (-SMD)	SF (-SMD)	○	TZ (-SMD)	○	○
70	○	SC (-SMD)	SF (-SMD)	○	○	○	○
Size (mm)	Φ8.0 × 2.2	6.0 × 8.3 × 8.3	6.0 × 6.0 × 6.0	6.8 x 3.5 x 3.5	7.6 × 5.0 × 5.0	7.8 x 5.0 x 5.0	10.0 x 8.3 x 8.3
I_n (8/20 μs) (kA) Impulse Discharge Current	10 / 20	20	3 / 5 / 10	3	5 / 10	5	10 / 20
Product Structure			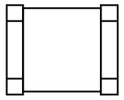	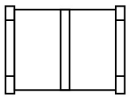	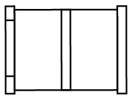	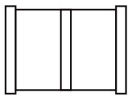
				SMD		

All Rights Reserved by Xiamen SET Electronics Co., Ltd. 2024-2026 V1.1

Gas Discharge Tube (GDT) Features & Model List Overview

DC Spark-over Voltage (V) \ Model	61	64	67	70	73	76
4500	○	SF (-L)	SE (-L)	○	○	○
4000	○	SF (-L)	SE (-L)	○	○	○
3600	○	SF (-L)	SE (-L)	○	○	○
3000	○	SF (-L)	SE (-L)	○	○	○
2500	○	SF (-L)	SE (-L)	○	○	○
2000	○	SF (-L)	SE (-L)	○	○	○
1500	○	SF (-L)	SE (-L)	○	○	○
1200	○	○	SE (-L)	○	○	○
1000	○	SF (-L)	SE (-L)	○	○	○
800	SD (-L)	SF (-L)	SE (-L)	○	○	○
600	SD (-L)	SF (-L)	SE (-L)	TZ (-L)	TB (-L)	TR (-L)
470	SD (-L)	SF (-L)	SE (-L)	TZ (-L)	TB (-L)	TR (-L)
420	SD (-L)	SF (-L)	SE (-L)	TZ (-L)	TB (-L)	TR (-L)
400	○	○	○	○	○	○
350	SD (-L)	SF (-L)	SE (-L)	TZ (-L)	TB (-L)	TR (-L)
300	○	○	○	○	○	○
250	SD (-L)	SF (-L)	SE (-L)	○	○	○
230	SD (-L)	SF (-L)	SE (-L)	TZ (-L)	TB (-L)	TR (-L)
200	○	○	○	TZ (-L)	○	○
150	SD (-L)	SF (-L)	SE (-L)	TZ (-L)	TB (-L)	TR (-L)
90	SD (-L)	SF (-L)	SE (-L)	TZ (-L)	TB (-L)	TR (-L)
75	SD (-L)	SF (-L)	SE (-L)	TZ (-L)	○	○
70	SD (-L)	SF (-L)	SE (-L)	○	○	○
Size (mm)	Φ5.0 × 5.0	Φ5.5 × 6.0	Φ8.0 × 6.0	Φ5.0 × 7.6	Φ6.0 × 8.2	Φ8.0 × 10.0
I_n (8/20 μs) (kA) Impulse Discharge Current	5	3 / 5 / 10	5 / 10 / 20	5 / 10	10	10 / 20
Product Structure	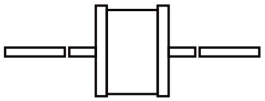				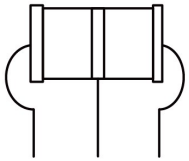	

DIP

All Rights Reserved by Xiamen SET Electronics Co., Ltd. 2024-2026 V1.1

Gas Discharge Tube (GDT) Features & Model List Overview

DC Spark-over Voltage (V) \ Model	79	82	86	89	92	95	98	101	104	107	110	113	116	119
4500	○	○	○	○	○	○	○	○	○	○	○	○	○	○
4000	○	○	○	○	○	○	○	○	○	○	○	○	○	○
3600	○	○	○	○	○	○	○	○	○	○	○	○	○	○
3000	○	○	○	○	○	○	○	○	SPR	○	○	○	○	○
2500	○	○	○	○	○	○	○	○	○	○	○	○	○	○
2000	○	SPB	○	○	○	○	○	○	SPR	○	○	○	○	○
1500	SPA	SPB	○	SPJ	SPI	○	○	○	○	○	○	○	○	○
1400	○	○	○	○	○	○	○	○	○	○	○	○	○	TPA
1000	○	SPB	SPC	SPJ	○	○	○	○	○	○	○	○	○	○
800	SPA	SPB	SPC	SPJ	SPI	SPH	SPK	SPP	SPR	SPS	SPV	SPZ	SPO	TPA
600	SPA	SPB	SPC	SPJ	SPI	SPH	SPK	SPP	SPR	SPS	SPV	SPZ	SPO	○
470	○	○	○	○	○	○	○	○	○	○	○	○	○	○
420	○	○	○	○	○	○	○	○	○	○	○	○	○	○
400	○	○	○	○	○	○	○	○	○	○	○	○	○	○
350	SPA	SPB	SPC	SPJ	SPI	SPH	○	○	○	○	SPV	SPZ	○	○
300	○	○	○	○	○	○	○	○	○	○	○	○	○	○
250	○	○	○	○	○	○	○	○	○	○	○	○	○	○
230	○	○	○	○	○	○	○	○	○	○	○	○	○	○
200	○	○	○	○	○	○	○	○	○	○	○	○	○	○
150	○	SPB	○	○	○	○	○	○	○	○	○	○	○	○
90	○	SPB	○	○	○	○	SPK	○	○	○	○	○	○	○
75	○	○	○	○	○	○	○	○	○	○	○	○	○	○
70	○	○	○	○	○	○	○	○	○	○	○	○	○	○
Size (mm)	Φ11.8 × 16.0	Φ11.8 × 6.2	Φ11.8 × 4.2	Φ16.0 × 4.5	Φ16.0 × 8.0	Φ18.0 × 6.7	Φ15.0 × 3.0	Φ30.0 × 12.0	Φ20.0 × 6.0	Φ24.0 × 10.0	Φ20.0 × 4.0	Φ11.8 × 12.0	Φ30.0 × 30.0	16 × 8.4 × 9.3
I_n (8/20 μs) (kA) Impulse Discharge Current	20 / 30 / 40	20		20 / 30	20 / 30 / 40	30	40	25 / 50 / 100	20 / 40	80	40	20 / 40	100	20
Product Structure														

High Current
(May increase each kind of connect mode according to the customer different demand.)

All Rights Reserved by Xiamen SET Electronics Co., Ltd. 2024-2026 V1.1

Glossary

Item	Description
V_s	**D.C.Spark-over Voltage** The voltage at which the GDT sparks over with slowly increasing d.c. voltage. — (IEC 61643-311)
V	**Impulse Spark-over Voltage** The highest Voltage which appears across the terminals of a GDT in the period between the application of an impulse of given wave-shape and the time when current begins to flow. — (ITU-T K.12)
V_a	**Arc Voltage** Voltage drop across the GDT during arc current flow. — (IEC 61643-311)
V_{gl}	**Glow Voltage** The peak value of the voltage drop across the GDT when a glow-current is flowing, It is sometimes called the glow mode voltage. — (ITU-T K.12)
8/20 μs	**8/20 Current Impulse** Current impulse with a nominal virtual front time of 8 μs and a nominal time to half-value of 20 μs. — (IEC 61643-11)
10/350 μs	**10/350 Current Impulse** Current impulse with a nominal virtual front time of 10 μs and a nominal time to half-value of 350 μs. — (IEC 61643-11)
1.2/50 μs	**1.2/50 Voltage Impulse** Voltage impulse with a nominal virtual front time of 1.2 μs and a nominal time to half-value of 50 μs. — (IEC 61643-11)
I	**Alternating Discharge Current** The r.m.s. value of an approximately sinusoidal alternating current passing through the gas discharge tube. — (ITU-T K.12)
I_n	**Nominal Discharge Current** Crest value of the current through the GDT having a current waveshape of 8/20 μs. — (IEC 61643-11)
I_{max}	**Maximum Discharge Current** Crest value of a current through the GDT having an 8/20 μs waveshape and magnitude according to the manufacturers specification. I_{max} is equal to or greater than I_n. — (IEC 61643-11)

All Rights Reserved by Xiamen SET Electronics Co., Ltd. 2024-2026 V1.1

I_{imp}	**Impulse Discharge Current** Crest value of a discharge current through the SPD with specified charge transfer Q and specified energy W/R in the specified time. — (IEC 61643-11)
U_p	**Voltage Protection Level** Maximum voltage to be expected at the SPD terminals due to an impulse stress with defined voltage steepness and an impulse stress with a discharge current with given amplitude and waveshape. — (GB 18802.11、IEC 61643-11)
U_C	**maximum r.m.s. voltage** Which may be continuously applied to the SPD's mode of protection. — (IEC 61643-11)
I_f	**follow current** Peak current supplied by the electrical power system and flowing through the SPD after a discharge current impulse. — (IEC 61643-11)
class I	**class I tests** Tests carried out with the impulse discharge current Iimp, with an 8/20 current impulse with a crest value equal to the crest value of Iimp, and with a 1.2/50 voltage impulse. — (IEC 61643-11)
class II	**class II tests** Tests carried out with the nominal discharge current I_n, and the 1.2/50μs voltage impulse. — (IEC 61643-11)

All Rights Reserved by Xiamen SET Electronics Co., Ltd. 2024-2026 V1.1

ATTENTION

Usage

1. Do not operate GDT in power supply networks, whose maximum operation voltage exceeds the minimum spark-overvoltage of the GDT.
2. The GDT may become hot in the event of longer periods of current stress (burn risk). In the event of overload the connectors may fail or the component may be destroyed.
3. If the contacts of GDT are defective, current load can cause sparks and loud noises.
4. When air pressure is from 55 kPa to 106 kPa. The relative altitude shall be +5000 m to –500 m.

Replacement

The GDT is a non-repairable product. For safety sake, please use equivalent GDT for replacement.

Storage

The packaged GDT should be placed in a dry, ventilation and non-corrosive environment.

Installation Position

Do not install the GDT in a touchable position.

Mechanical Stress

Do not take violent action such as knocking when assembling, to avoid product failure.

All Rights Reserved by Xiamen SET Electronics Co., Ltd. 2024-2026 V1.1

GDT
Gas Discharge Tube

Description

Gas Discharge Tube (GDT) is a single-gap or multi-gap switching overvoltage protection device. Under normal circumstances, the GDT is in a high-impedance state; when suffer a surge, the GDT will change from a high-impedance state to a low-impedance state, and release the surge energy to the ground, reducing the residual voltage of the circuit, thereby protecting the equipment circuit or protect the human body from the hazards of transient overvoltage. GDT is formed by high-temperature sealing of metal electrodes, metallized ceramics, inert gas or other mixed gases.Gas discharge tubes (GDT) are widely used in overvoltage protection of signals, power supplies and various ports.SETsafe | SETfuse's gas discharge tube products have a voltage of 70 ~ 4500 V, a flow (@8/20 μs) 0.5 ~ 200 kA, a full range of safety certifications including: UL, cUL, TUV, and meet the RoHS, REACH requirements.

Features

- Fast Response
- Stable Performance Over Surface Life
- High Current Rating
- Low Capacitance
- High Insulation Resistance
- RoHS & REACH Compliant

Applications

- WLAN XDSL
- CATV
- MDF
- Ethernet
- BTS (Base Station)
- Power Supply
- Antenna and RF
- Consumer Electronics
- Class Ⅰ Class Ⅱ and SPD
- N-PE Mode Protection In AC Power

Structure

SMD Type

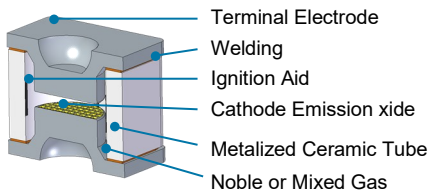

High Surge Type

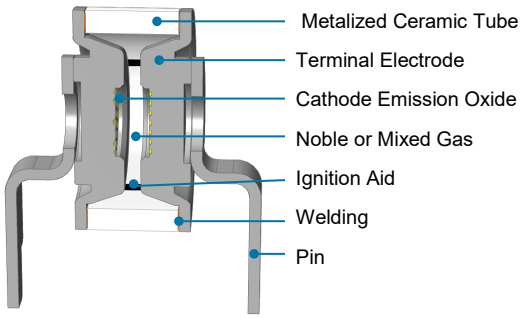

DIP Type

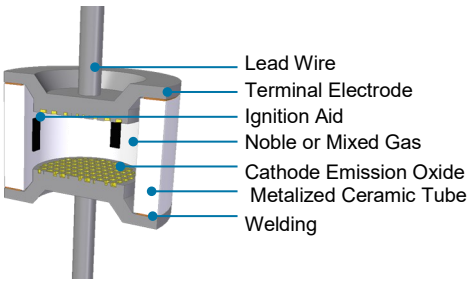

All Rights Reserved by Xiamen SET Electronics Co., Ltd. 2024-2026 V1.1

Electrical Characteristics

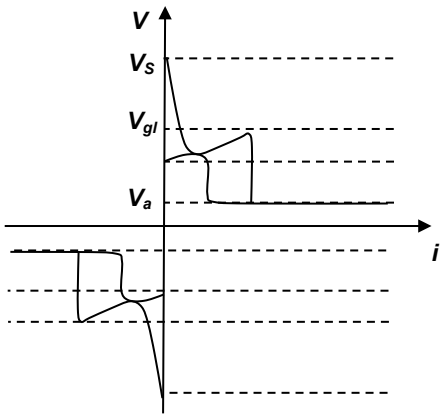

Relationship between Current and Voltage

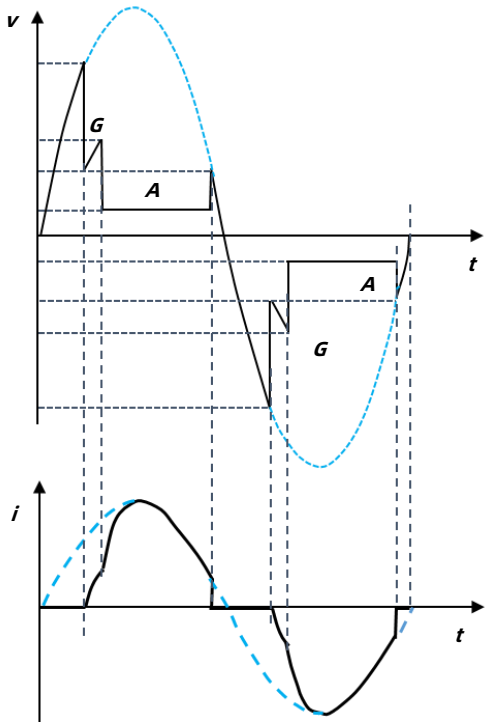

Time Variation Patterns of Voltage and Current

V_s : Spark-over Voltage
Vgl: Glow Voltage
Va : Arc Voltage
G : Glow Mode
A : Arc Mode

Reference Curve for Spark-over Voltage (Refer to 230 VDC)

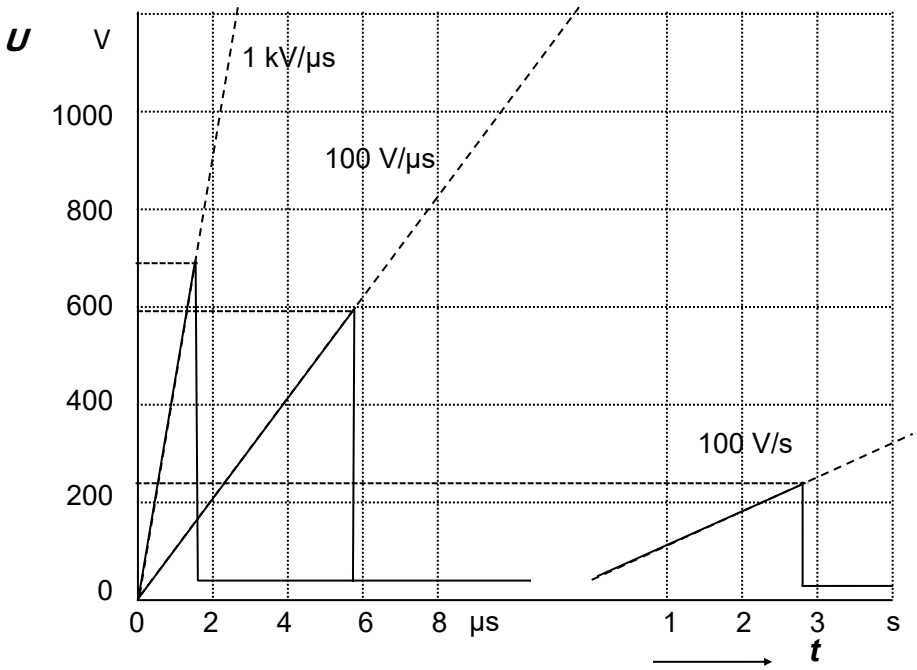

Dynamic Response
Impulse Spark-over Voltage
(100 V/μs,1 kV/μs)

Static Response
D.C. Spark-over Voltage (100 V/s)

All Rights Reserved by Xiamen SET Electronics Co., Ltd. 2024-2026 V1.1

Curve for Impulse Discharge Current (For Reference Only)

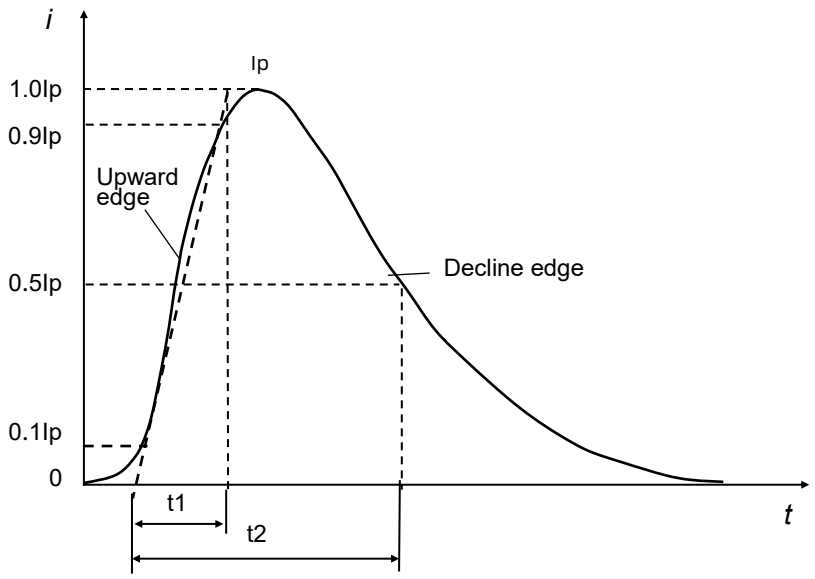

I_p: Peak current
t_1: Rise time in μs
t_2: Delay time to half value in μs

Application Example (For Reference Only)

AC Power Protection

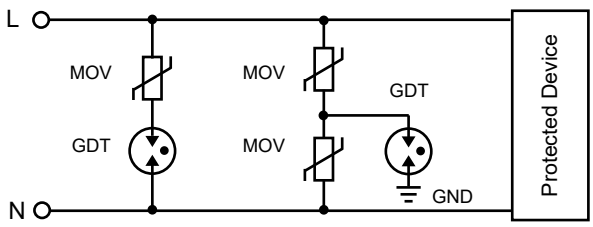

2-Electrod GDT Signal Circuit Protection

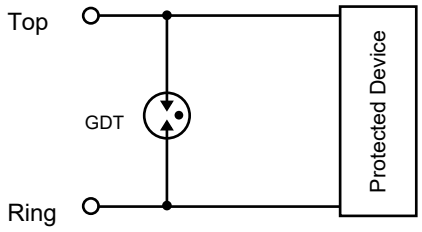

DC Power Protection

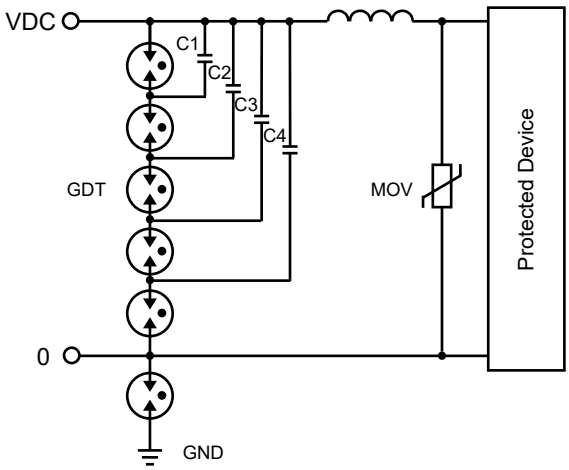

3-Electrod GDT Signal Circuit Protection

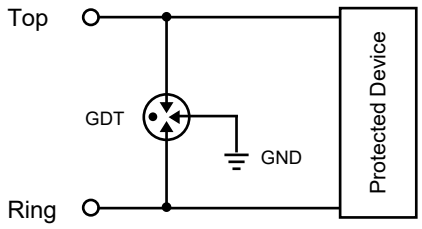

All Rights Reserved by Xiamen SET Electronics Co., Ltd. 2024-2026 V1.1

Recommended Hand-soldering Parameters (For Reference Only)

Items	Condition
Soldering Iron Temperature	350 °C (Max.)
Soldering Time	4 s (Max.)
Space between soldering point and product body	According to the guidance method

Wave Soldering Parameters (For Reference Only)

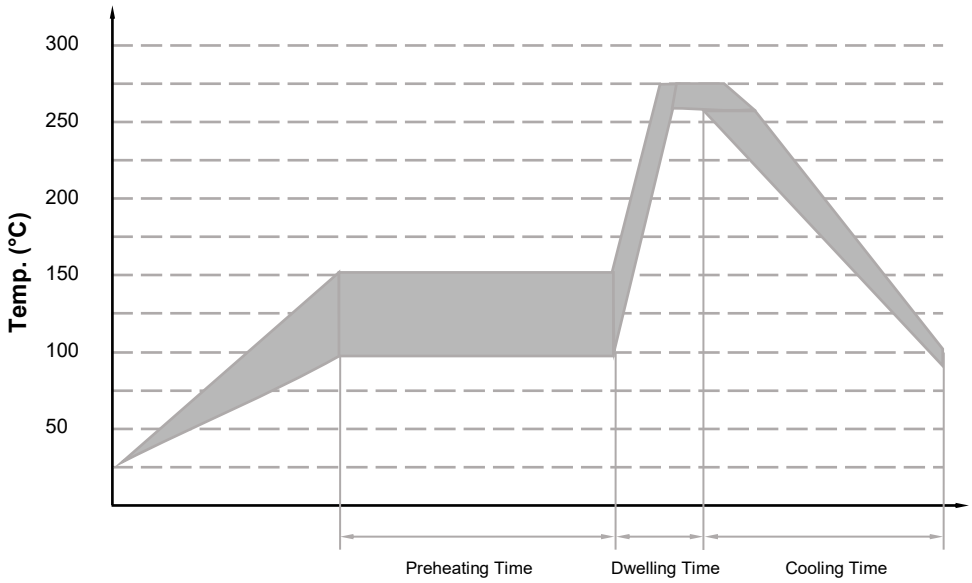

Item	Temp. (°C)	Time (s)
Preheating	90 to 150	< 150
Dwelling	255 to 280	3 to 10

All Rights Reserved by Xiamen SET Electronics Co., Ltd. 2024-2026 V1.1

Reflow Soldering Parameters (For Reference Only)

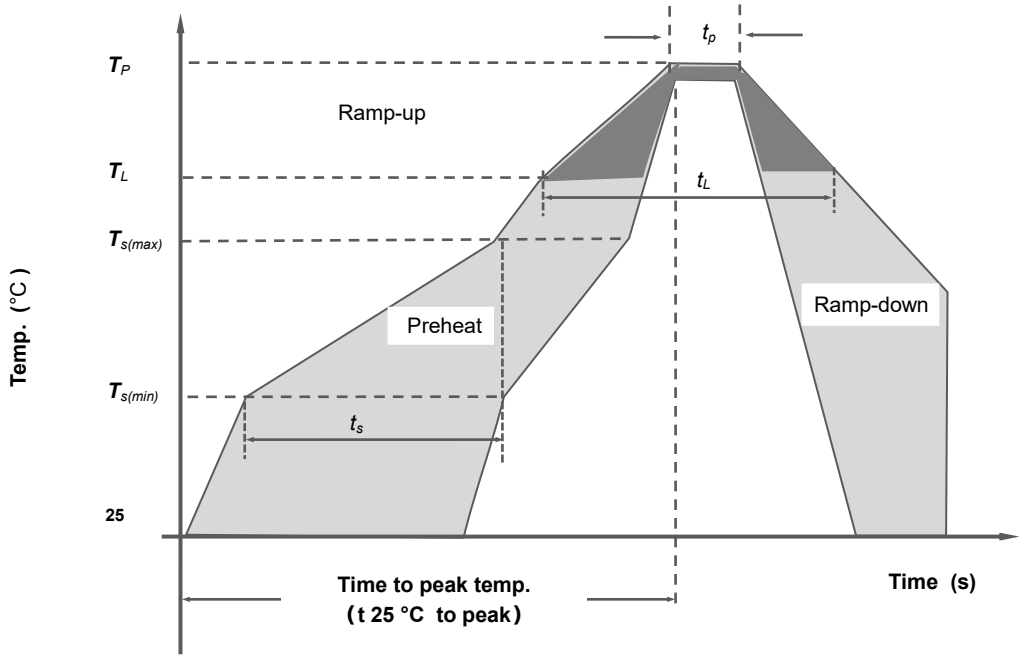

Reflow Condition		Pb-Free Assembly
Preheat	Temp. Min $T_{s(min)}$	150 °C
	Temp. Max $T_{s(max)}$	200 °C
	Time (Min to Max) t_s	(60 to 180) s
Average ramp up rate (Liquidus Temp. (T_L) to peak)		3 °C / second max
$T_{s\ (max)}$ to T_L Ramp-up Rate		5 °C / second max
Reflow	Temp. (T_L) (Liquidus)	217 °C
	Temp. (t_L)	(60 to 150) s
Peak Temp. (T_P)		(255 to 260) °C
Time within 5 °C of actual peak Temp. (t_P)		(10 to 30) s
Ramp-down Rate		6 °C / second max
Time 25 °C to peak Temp. (T_P)		8 minutes max
Do not exceed		260 °C

All Rights Reserved by Xiamen SET Electronics Co., Ltd. 2024-2026 V1.1

GDT
Gas Discharge Tube

SZ(-SMD) Series

Description

Gas Discharge Tube (GDT) is a single-gap or multi-gap switching overvoltage protection device. Under normal circumstances, the GDT is in a high-impedance state; when suffer a surge, the GDT will change from a high-impedance state to a low-impedance state, and release the surge energy to the ground, reducing the residual voltage of the circuit, thereby protecting the equipment circuit or protect the human body from the hazards of transient overvoltage. GDT is formed by high-temperature sealing of metal electrodes, metallized ceramics, inert gas or other mixed gases.

Features

- Fast Response
- Stable Performance Over Surface Life
- High Current Rating
- Low Capacitance
- High Insulation Resistance
- RoHS & REACH Compliant

Agency Information

Agency Symbol	Standards	The File No. and certification No. obtained by SETsafe | SETfuse
	UL497B	E513446

Applications

- POE
- Ethernet

Dimensions (mm)

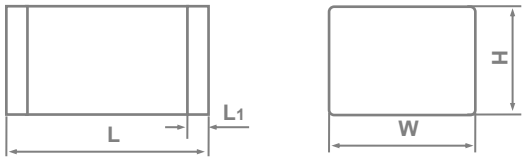

L	W	H	L_1
3.2 ± 0.3	1.6 ± 0.2	1.6 ± 0.2	0.3 ± 0.2

Part Numbering System

SZ 401 Z - SMD

- SMD: Lead Type (L: Lead wire, Brank: without Lead Wire, SMD)
- Z: Impulse Discharge Current (Z: 0.5 kA,)
- 401: D.C.Spark-over Voltage (100 V/s) (401: 40 × 10^1)
- SZ: Series: SZ (3.2 × 1.6 × 1.6 mm)

Recommendation Pad Size (mm)

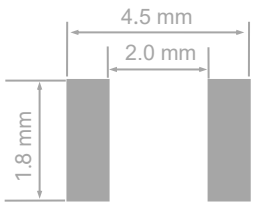

Reminder:
Part numbering system in the datasheet is only for selecting correct parameter and product features. Before placing order, please contact us for specifications and use the part number and product code in the specifications to place order to ensure the part is correct. Product code is the unique indentification.

All Rights Reserved by Xiamen SET Electronics Co., Ltd. 2024-2026 V1.1

Specifications

Model	D.C. Spark-over Voltage @100 V/s	Tolerance of V_s	Impulse Spark-over Voltage @1 kV/μs	Arc Voltage @0.5 A	Impulse Discharge Current @8/20 μs	Alternating Discharge Current @50Hz 1 s	Insulation Resistance		Capacitance 0.5 VDC @ 1MHz	Agency Approvals	
	Vs	*Vs*	*V*	*Va*	*In*	*I*	*VDC*	*IR*	*C*		
	V	V	V	V	kA	A (r.m.s.)	V	GΩ	(pF)	UL497B	TUV
SZ091Z - SMD	90	63 ~ 118	≤ 900	≈ 8	0.5	0.5	50	≥ 1	≤ 0.5	●	○
SZ151Z - SMD	150	105 ~ 195	≤ 900	≈ 10	0.5	0.5	50	≥ 1	≤ 0.5	●	○
SZ201Z - SMD	200	140 ~ 280	≤ 900	≈ 10	0.5	0.5	100	≥ 1	≤ 0.5	●	○
SZ231Z - SMD	230	161 ~ 300	≤ 1000	≈ 10	0.5	0.5	100	≥ 1	≤ 0.5	●	○
SZ301Z - SMD	300	210 ~ 390	≤ 1100	≈ 12	0.5	0.5	100	≥ 1	≤ 0.5	●	○
SZ401Z - SMD	400	280 ~ 520	≤ 1200	≈ 12	0.5	0.5	100	≥ 1	≤ 0.5	●	○

Note:
1. The above parameters based on ITU - T K12 & IEC61643.311 standards.
2. "●" means GDT has gained the certification. "○" means GDT is no certification.
3. Operating Temperature -40 °C ~ +125 °C .

All Rights Reserved by Xiamen SET Electronics Co., Ltd. 2024-2026 V1.1

Packaging Information

Tape & Reel (SMD)

Item	Reel	Inner Box	Carton
Dimensions (mm)	Φ178 × 16.5	200 × 200 × 30	440 × 250 × 230
Quantity (PCS)	3000	3000	60000
Notes: Packaging dimensions and quantity are for reference only.			

All Rights Reserved by Xiamen SET Electronics Co., Ltd. 2024-2026 V1.1

GDT
Gas Discharge Tube

SW(-SMD) Series

Description

Gas Discharge Tube (GDT) is a single-gap or multi-gap switching overvoltage protection device. Under normal circumstances, the GDT is in a high-impedance state; when suffer a surge, the GDT will change from a high-impedance state to a low-impedance state, and release the surge energy to the ground, reducing the residual voltage of the circuit, thereby protecting the equipment circuit or protect the human body from the hazards of transient overvoltage. GDT is formed by high-temperature sealing of metal electrodes, metallized ceramics, inert gas or other mixed gases.

Features

- Fast Response
- Stable Performance Over Surface Life
- High Current Rating
- Low Capacitance
- High Insulation Resistance
- RoHS & REACH Compliant

Agency Information

Agency Symbol	Standards	The File No. and certification No. obtained by SETsafe | SETfuse
	UL497B	E513446
	UL1449	E322662

Applications

- Power supply
- Security Equipment
- POE
- Ethernet

Dimensions (mm)

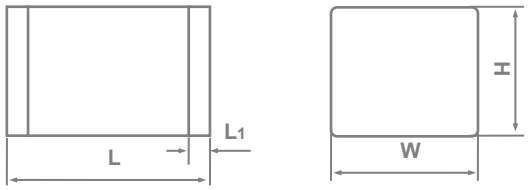

L	W	H	L_1
3.2 ± 0.3	2.5 ± 0.2	2.5 ± 0.2	0.4

Part Numbering System

SW 601 Y - SMD

- SMD: Lead Type (L: Lead wire, Brank: without Lead Wire, SMD)
- Y: Impulse Discharge Current (Y: 1 kA,)
- 601: D.C.Spark-over Voltage (100 V/s) (601: 60×10^1)
- SW: Series: SW (3.2 × 2.5 × 2.5 mm)

Recommendation Pad Size (mm)

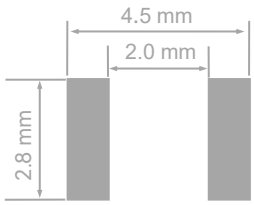

Reminder:
Part numbering system in the datasheet is only for selecting correct parameter and product features. Before placing order, please contact us for specifications and use the part number and product code in the specifications to place order to ensure the part is correct. Product code is the unique indentification.

All Rights Reserved by Xiamen SET Electronics Co., Ltd. 2024-2026 V1.1

Specifications

Model	D.C. Spark-over Voltage @100 V/s	Tolerance of V_s	Impulse Spark-over Voltage @1 kV/μs	Arc Voltage @0.5 A	Impulse Discharge Current @8/20 μs	Alternating Discharge Current @50Hz 1 s	Insulation Resistance		Capacitance 0.5 VDC @ 1MHz	Agency Approvals		
	Vs	*Vs*	*V*	*Va*	*In*	*I*	*VDC*	*IR*	*C*			
	V	V	V	V	kA	A (r.m.s.)	V	GΩ	(pF)	UL497B	UL1449	TUV
SW075Y - SMD	75	57 ~ 93	≤ 650	≈ 8	1	1	25	≥ 1	≤ 0.6	●	○	○
SW091Y - SMD	90	72 ~ 108	≤ 600	≈ 8	1	1	50	≥ 1	≤ 0.6	●	○	○
SW151Y - SMD	150	120 ~ 180	≤ 600	≈ 10	1	1	50	≥ 1	≤ 0.6	●	○	○
SW201Y - SMD	200	160 ~ 240	≤ 700	≈ 12	1	1	100	≥ 1	≤ 0.6	●	○	○
SW231Y - SMD	230	184 ~ 276	≤ 700	≈ 12	1	1	100	≥ 1	≤ 0.6	●	○	○
SW301Y - SMD	300	240 ~ 360	≤ 800	≈ 12	1	1	100	≥ 1	≤ 0.6	●	○	○
SW351Y - SMD	350	280 ~ 420	≤ 1000	≈ 12	1	1	100	≥ 1	≤ 0.6	●	○	○
SW401Y - SMD	400	320 ~ 480	≤ 1000	≈ 12	1	1	100	≥ 1	≤ 0.6	●	○	○
SW421Y - SMD	420	336 ~ 504	≤ 1000	≈ 15	1	1	100	≥ 1	≤ 0.6	●	○	○
SW471Y - SMD	470	376 ~ 564	≤ 1200	≈ 15	1	1	100	≥ 1	≤ 0.6	●	○	○
SW601Y - SMD	600	480 ~ 720	≤ 1400	≈ 15	1	1	100	≥ 1	≤ 0.6	●	○	○
SW801Y - SMD	800	640 ~ 960	≤ 1600	≈ 15	1	1	100	≥ 1	≤ 0.6	○	●	○

Note:
1. The above parameters based on ITU - T K12 & IEC61643.311 standards.
2. "●" means GDT has gained the certification, "○" means GDT is no certification.
3. Operating Temperature -40 °C ~ +125 °C .

All Rights Reserved by Xiamen SET Electronics Co., Ltd. 2024-2026 V1.1

Packaging Information

Tape & Reel (SMD)

Item	Reel	Inner Box	Carton
Dimensions (mm)	Φ330 × 16.5	340 × 340 × 40	360 × 360 × 360
Quantity (PCS)	2500	5000	40000
Notes: Packaging dimensions and quantity are for reference only.			

All Rights Reserved by Xiamen SET Electronics Co., Ltd. 2024-2026 V1.1

GDT
Gas Discharge Tube

SX(-SMD) Series

Description

Gas Discharge Tube (GDT) is a single-gap or multi-gap switching overvoltage protection device. Under normal circumstances, the GDT is in a high-impedance state; when suffer a surge, the GDT will change from a high-impedance state to a low-impedance state, and release the surge energy to the ground, reducing the residual voltage of the circuit, thereby protecting the equipment circuit or protect the human body from the hazards of transient overvoltage. GDT is formed by high-temperature sealing of metal electrodes, metallized ceramics, inert gas or other mixed gases.

Features

- Fast Response
- Stable Performance Over Surface Life
- High Current Rating
- Low Capacitance
- High Insulation Resistance
- RoHS & REACH Compliant

Agency Information

Agency Symbol	Standards	The File No. and certification No. obtained by SETsafe | SETfuse
	UL497B	E513446
	TUV	No.B1072210003 Rev03

Applications

- Power supply
- Security Equipment
- POE
- Ethernet

Dimensions (mm)

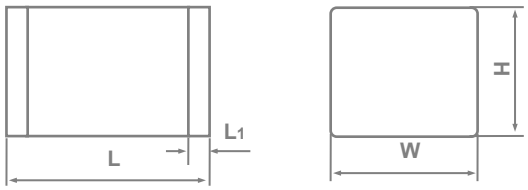

L	W	H	L_1
4.5 ± 0.3	3.2 ± 0.3	2.7 ± 0.2	0.4

Part Numbering System

SX 601 X - SMD

- SMD: Lead Type (L: Lead wire, Brank: without Lead Wire, SMD)
- X: Impulse Discharge Current (Y: 1 kA, X: 2 kA,)
- 601: D.C.Spark-over Voltage (100 V/s) (601: 60×10^1)
- SX: Series: SX (4.5 × 3.2 × 2.7 mm)

Recommendation Pad Size (mm)

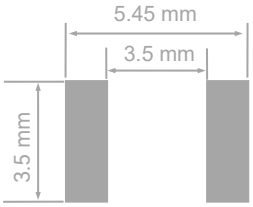

Reminder:
Part numbering system in the datasheet is only for selecting correct parameter and product features. Before placing order, please contact us for specifications and use the part number and product code in the specifications to place order to ensure the part is correct. Product code is the unique indentification.

All Rights Reserved by Xiamen SET Electronics Co., Ltd. 2024-2026 V1.1

Specifications

Model	D.C. Spark-over Voltage @100 V/s	Tolerance of V_s	Impulse Spark-over Voltage @1 kV/μs	Arc Voltage @0.5 A	Impulse Discharge Current @8/20 μs	Alternating Discharge Current @50Hz 1 s	Insulation Resistance		Capacitance 0.5 VDC @ 1MHz	Agency Approvals	
	Vs	*Vs*	*V*	*Va*	*In*	*I*	*VDC*	*IR*	*C*		
	V	V	V	V	kA	A (r.m.s.)	V	GΩ	(pF)	UL497B	TUV
SX075Y - SMD	75	57 ~ 93	≤ 650	≈8	1	1	25	≥ 1	≤ 0.6	●	●
SX091Y - SMD	90	72 ~ 108	≤ 600	≈8	1	1	50	≥ 1	≤ 0.6	●	●
SX151Y - SMD	150	120 ~ 180	≤ 600	≈ 10	1	1	50	≥ 1	≤ 0.6	●	●
SX201Y - SMD	200	160 ~ 240	≤ 700	≈ 12	1	1	100	≥ 1	≤ 0.6	●	●
SX231Y - SMD	230	184 ~ 280	≤ 700	≈ 12	1	1	100	≥ 1	≤ 0.6	●	●
SX301Y - SMD	300	240 ~ 360	≤ 800	≈ 12	1	1	100	≥ 1	≤ 0.6	●	●
SX401Y - SMD	400	320 ~ 480	≤ 1000	≈ 15	1	1	100	≥ 1	≤ 0.6	●	●
SX421Y - SMD	420	336 ~ 504	≤ 1000	≈ 15	1	1	100	≥ 1	≤ 0.6	●	●
SX471Y - SMD	470	376 ~ 564	≤ 12000	≈ 15	1	1	100	≥ 1	≤ 0.6	●	●
SX601Y - SMD	600	480 ~ 720	≤ 1400	≈ 15	1	1	25	≥ 1	≤ 0.6	●	●
SX801Y - SMD	800	640 ~ 960	≤ 1600	≈ 15	1	1	100	≥ 1	≤ 0.6	○	●
SX075X - SMD	75	57 ~ 93	≤ 650	≈8	2	2	25	≥ 1	≤ 0.6	●	●
SX091X - SMD	90	72 ~ 108	≤ 600	≈8	2	2	50	≥ 1	≤ 0.6	●	●
SX151X - SMD	150	120 ~ 180	≤ 600	≈ 10	2	2	100	≥ 1	≤ 0.6	●	●
SX201X - SMD	200	160 ~ 240	≤ 700	≈ 12	2	2	100	≥ 1	≤ 0.6	●	●
SX231X - SMD	230	184 ~ 280	≤ 700	≈ 12	2	2	100	≥ 1	≤ 0.6	●	●
SX301X - SMD	300	240 ~ 360	≤ 800	≈ 12	2	2	100	≥ 1	≤ 0.6	●	●
SX401X - SMD	400	320 ~ 480	≤ 1000	≈ 15	2	2	100	≥ 1	≤ 0.6	●	●
SX421X - SMD	420	336 ~ 504	≤ 1000	≈ 15	2	2	100	≥ 1	≤ 0.6	●	●
SX471X - SMD	470	376 ~ 564	≤ 1200	≈ 15	2	2	100	≥ 1	≤ 0.6	●	●
SX601X - SMD	600	480 ~ 720	≤ 1400	≈ 15	2	2	100	≥ 1	≤ 0.6	●	●
SX801X - SMD	800	640 ~ 960	≤ 1600	≈ 15	2	2	100	≥ 1	≤ 0.6	○	●

Note:
1. The above parameters based on ITU - T K12 & IEC61643.311 standards.
2. "●" means GDT has gained the certification. "○" means GDT is no certification.
3. Operating Temperature -40 °C ~ +125 °C .

All Rights Reserved by Xiamen SET Electronics Co., Ltd. 2024-2026 V1.1

Packaging Information

Tape & Reel (SMD)

Item	Reel	Inner Box	Carton
Dimensions (mm)	Φ330 × 16.5	340 × 340 × 40	360 × 360 × 360
Quantity (PCS)	2500	5000	40000
Notes: Packaging dimensions and quantity are for reference only.			

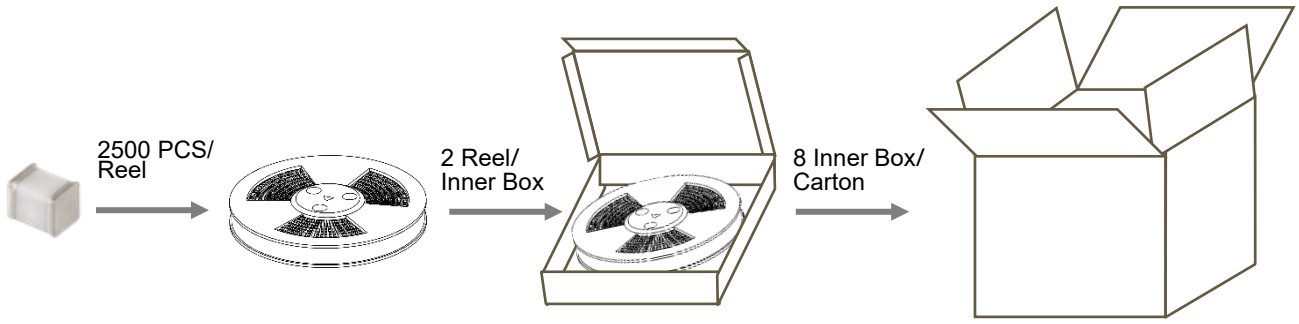

All Rights Reserved by Xiamen SET Electronics Co., Ltd. 2024-2026 V1.1

GDT
Gas Discharge Tube

SY(-SMD) Series

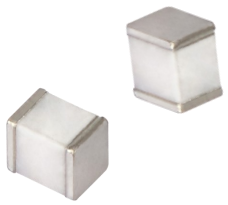

Description

Gas Discharge Tube (GDT) is a single-gap or multi-gap switching overvoltage protection device. Under normal circumstances, the GDT is in a high-impedance state; when suffer a surge, the GDT will change from a high-impedance state to a low-impedance state, and release the surge energy to the ground, reducing the residual voltage of the circuit, thereby protecting the equipment circuit or protect the human body from the hazards of transient overvoltage. GDT is formed by high-temperature sealing of metal electrodes, metallized ceramics, inert gas or other mixed gases.

Features

- Fast Response
- Stable Performance Over Surface Life
- High Current Rating
- Low Capacitance
- High Insulation Resistance
- RoHS & REACH Compliant

Agency Information

Agency Symbol	Standards	The File No. and certification No. obtained by SETsafe | SETfuse
	UL497B	On-going

Applications

- Power supply
- Security Equipment
- POE
- Ethernet

Dimensions (mm)

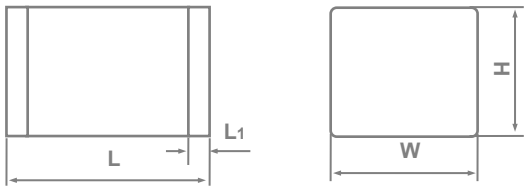

L	W	H	L_1
4.0 ± 0.3	3.5 ± 0.3	3.5 ± 0.2	0.4

Part Numbering System

SY 601 T - SMD

- SMD: Lead Type (L: Lead wire, Brank: without Lead Wire, SMD)
- T: Impulse Discharge Current (T: 3 kA,)
- 601: D.C.Spark-over Voltage (100 V/s) (601: 60×10^1)
- SY: Series: SY (4.0 × 3.5 × 3. 5 mm)

Recommendation Pad Size (mm)

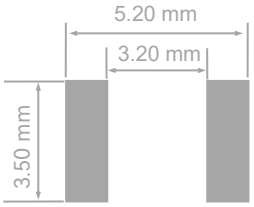

Reminder:
Part numbering system in the datasheet is only for selecting correct parameter and product features. Before placing order, please contact us for specifications and use the part number and product code in the specifications to place order to ensure the part is correct. Product code is the unique indentification.

All Rights Reserved by Xiamen SET Electronics Co., Ltd. 2024-2026 V1.1

Specifications

Model	D.C. Spark-over Voltage @100 V/s	Tolerance of V_s	Impulse Spark-over Voltage @1 kV/μs	Arc Voltage @0.5 A	Impulse Discharge Current @8/20 μs	Alternating Discharge Current @50Hz 1 s	Insulation Resistance		Capacitance 0.5 VDC @ 1MHz	Agency Approvals	
	Vs	*Vs*	*V*	*Va*	*In*	*I*	*VDC*	*IR*	*C*		
	V	V	V	V	kA	A (r.m.s.)	V	GΩ	(pF)	UL497B	TUV
SY075T - SMD	75	57 ~ 93	≤ 650	≈8	3	2	25	≥ 1	≤ 0.8	○	○
SY091T - SMD	90	72 ~ 108	≤ 600	≈8	3	2	50	≥ 1	≤ 0.8	○	○
SY151T - SMD	150	120 ~ 180	≤ 600	≈ 10	3	2	100	≥ 1	≤ 0.8	○	○
SY201T - SMD	200	160 ~ 240	≤ 700	≈ 12	3	2	100	≥ 1	≤ 0.8	○	○
SY231T - SMD	230	184 ~ 280	≤ 700	≈ 12	3	2	100	≥ 1	≤ 0.8	○	○
SY301T - SMD	300	240 ~ 360	≤ 800	≈ 12	3	2	100	≥ 1	≤ 0.8	○	○
SY401T - SMD	400	320 ~ 480	≤ 1000	≈ 12	3	2	100	≥ 1	≤ 0.8	○	○
SY421T - SMD	420	336 ~ 504	≤ 850	≈ 12	3	2	100	≥ 1	≤ 0.8	○	○
SY471T - SMD	470	376 ~ 564	≤ 1200	≈ 15	3	2	100	≥ 1	≤ 0.8	○	○
SY601T - SMD	600	480 ~ 720	≤ 1200	≈ 15	3	2	100	≥ 1	≤ 0.8	○	○
SY801T - SMD	800	640 ~ 960	≤ 1600	≈ 15	3	2	100	≥ 1	≤ 0.8	○	○

Note:
1. The above parameters based on ITU - T K12 & IEC61643.311 standards.
2. "●" means GDT has gained the certification, "○" means GDT is no certification.
3. .Operating Temperature -40 °C ~ +125 °C.

All Rights Reserved by Xiamen SET Electronics Co., Ltd. 2024-2026 V1.1

Packaging Information

Tape & Reel (SMD)

Item	Reel	Inner Box	Carton
Dimensions (mm)	Φ330 × 16.5	340 × 340 × 40	360 × 360 × 360
Quantity (PCS)	2500	5000	40000
Notes: Packaging dimensions and quantity are for reference only.			

All Rights Reserved by Xiamen SET Electronics Co., Ltd. 2024-2026 V1.1

GDT
Gas Discharge Tube

SN(-SMD) Series

Description

Gas Discharge Tube (GDT) is a single-gap or multi-gap switching overvoltage protection device. Under normal circumstances, the GDT is in a high-impedance state; when suffer a surge, the GDT will change from a high-impedance state to a low-impedance state, and release the surge energy to the ground, reducing the residual voltage of the circuit, thereby protecting the equipment circuit or protect the human body from the hazards of transient overvoltage. GDT is formed by high-temperature sealing of metal electrodes, metallized ceramics, inert gas or other mixed gases.

Features

- Fast Response
- Stable Performance Over Surface Life
- High Current Rating
- Low Capacitance
- High Insulation Resistance
- RoHS & REACH Compliant

Agency Information

Agency Symbol	Standards	The File No. and certification No. obtained by SETsafe | SETfuse
	UL497B	E513446

Applications

- New Energy
- Power supply
- Irrigation System

Dimensions (mm)

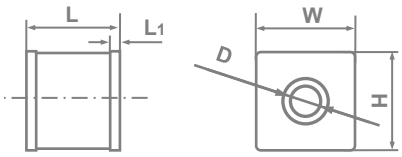

L	W	H	D	L_1
4.2 ± 0.3	5.0 ± 0.2	5.0 ± 0.2	Φ1.4	0.5

Part Numbering System

SN 601 A - SMD

- SMD: Lead Type (L: Lead wire, Brank: without Lead Wire, SMD)
- A: Impulse Discharge Current (A: 5 kA)
- 601: D.C.Spark-over Voltage (100 V/s) (601: 60×10^1)
- SN: Series: SN (4.2 × 5.0 × 5.0 mm)

Recommendation Pad Size (mm)

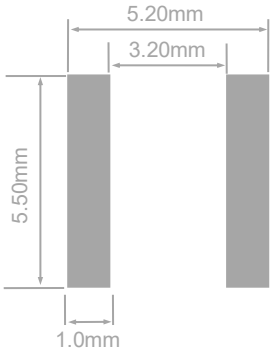

Reminder:
Part numbering system in the datasheet is only for selecting correct parameter and product features. Before placing order, please contact us for specifications and use the part number and product code in the specifications to place order to ensure the part is correct. Product code is the unique indentification.

All Rights Reserved by Xiamen SET Electronics Co., Ltd. 2024-2026 V1.1

Specifications

Model	D.C. Spark-over Voltage @100 V/s	Tolerance of V_s	Impulse Spark-over Voltage @1 kV/μs	Arc Voltage @0.5 A	Impulse Discharge Current @8/20 μs	Alternating Discharge Current @50Hz 1 s	Insulation Resistance		Capacitance 0.5 VDC @ 1MHz	Agency Approvals	
	Vs	*Vs*	*V*	*Va*	*In*	*I*	*VDC*	*IR*	*C*		
	V	V	V	V	kA	A (r.m.s.)	V	GΩ	(pF)	UL497B	TUV
SN071A - SMD	70	52 ~ 88	≤ 650	≈ 8	5	5	25	≥ 1	≤ 1.0	●	○
SN075A - SMD	75	57 ~ 93	≤ 650	≈ 8	5	5	25	≥ 1	≤ 1.0	●	○
SN091A - SMD	90	72 ~ 108	≤ 600	≈ 8	5	5	50	≥ 1	≤ 1.0	●	○
SN151A - SMD	150	120 ~ 180	≤ 600	≈ 10	5	5	50	≥ 1	≤ 1.0	●	○
SN201A - SMD	200	160 ~ 240	≤ 700	≈ 12	5	5	100	≥ 1	≤ 1.0	●	○
SN231A - SMD	230	184 ~ 276	≤ 700	≈ 12	5	5	100	≥ 1	≤ 1.0	●	○
SN301A - SMD	300	240 ~ 360	≤ 800	≈ 12	5	5	100	≥ 1	≤ 1.0	●	○
SN351A - SMD	350	280 ~ 420	≤ 1000	≈ 12	5	5	100	≥ 1	≤ 1.0	●	○
SN401A - SMD	400	320 ~ 480	≤ 1000	≈ 12	5	5	100	≥ 1	≤ 1.0	●	○
SN421A - SMD	420	336 ~ 504	≤ 1000	≈ 15	5	5	100	≥ 1	≤ 1.0	●	○
SN471A - SMD	470	376 ~ 564	≤ 1200	≈ 15	5	5	100	≥ 1	≤ 1.0	●	○
SN601A - SMD	600	480 ~ 720	≤ 1400	≈ 15	5	5	100	≥ 1	≤ 1.0	●	○
SN801A - SMD	800	640 ~ 960	≤ 1600	≈ 15	5	5	100	≥ 1	≤ 1.0	●	○

Note:
1. The above parameters based on ITU - T K12 & IEC61643.311 standards.
2. "●" means GDT has gained the certification. "○" means GDT is no certification.
3. Operating Temperature -40 °C ~ +125 °C.

All Rights Reserved by Xiamen SET Electronics Co., Ltd. 2024-2026 V1.1

Packaging Information

Tape & Reel (SMD)

Item	Reel	Inner Box	Carton
Dimensions (mm)	Φ330 × 20.5	340 × 340 × 40	360 × 360 × 360
Quantity (PCS)	1000	2000	14000
Notes: Packaging dimensions and quantity are for reference only.			

All Rights Reserved by Xiamen SET Electronics Co., Ltd. 2024-2026 V1.1

GDT
Gas Discharge Tube

SU(-SMD) Series

Description

Gas Discharge Tube (GDT) is a single-gap or multi-gap switching overvoltage protection device. Under normal circumstances, the GDT is in a high-impedance state; when suffer a surge, the GDT will change from a high-impedance state to a low-impedance state, and release the surge energy to the ground, reducing the residual voltage of the circuit, thereby protecting the equipment circuit or protect the human body from the hazards of transient overvoltage. GDT is formed by high-temperature sealing of metal electrodes, metallized ceramics, inert gas or other mixed gases.

Features

- Fast Response
- Stable Performance Over Surface Life
- High Current Rating
- Low Capacitance
- High Insulation Resistance
- RoHS & REACH Compliant

Agency Information

Agency Symbol	Standards	The File No. and certification No. obtained by SETsafe | SETfuse
	UL497B	E513446

Applications

- New Energy
- Power supply

Dimensions (mm)

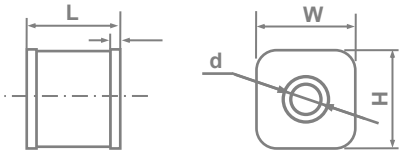

L	W	H	d	L_1
5.0 ± 0.3	5.4 ± 0.2	5.4 ± 0.2	Φ1.4	0.5

Part Numbering System

SU 601 A - SMD

- SMD: Lead Type (L: Lead wire, Brank: without Lead Wire, SMD)
- A: Impulse Discharge Current (A: 5 kA, M: 10 kA)
- 601: D.C.Spark-over Voltage (100 V/s) (601: 60 × 10^1)
- SU: Series: SU (5.0 × 5.4 × 5.4 mm)

Recommendation Pad Size (mm)

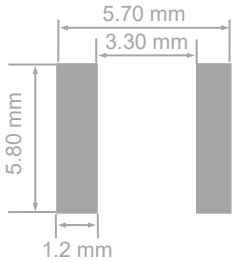

Reminder:
Part numbering system in the datasheet is only for selecting correct parameter and product features. Before placing order, please contact us for specifications and use the part number and product code in the specifications to place order to ensure the part is correct. Product code is the unique indentification.

All Rights Reserved by Xiamen SET Electronics Co., Ltd. 2024-2026 V1.1

Specifications

Model	D.C. Spark-over Voltage @100 V/s	Tolerance of V_s	Impulse Spark-over Voltage @1 kV/μs	Arc Voltage @0.5 A	Impulse Discharge Current @8/20 μs	Alternating Discharge Current @50Hz 1 s	Insulation Resistance		Capacitance 0.5 VDC @ 1MHz	Agency Approvals	
	Vs	*Vs*	*V*	*Va*	*In*	*I*	*VDC*	*IR*	*C*		
	V	V	V	V	kA	A (r.m.s.)	V	GΩ	(pF)	UL497B	TUV
SU091A - SMD	90	72 ~ 108	≤ 600	≈ 8	5	5	50	≥ 1	≤ 1.0	○	○
SU151A - SMD	150	120 ~ 180	≤ 600	≈ 10	5	5	50	≥ 1	≤ 1.0	○	○
SU231A - SMD	230	184 ~ 276	≤ 700	≈ 12	5	5	100	≥ 1	≤ 1.0	○	○
SU251A - SMD	250	200 ~ 300	≤ 700	≈ 12	5	5	100	≥ 1	≤ 1.0	○	○
SU351A - SMD	350	280 ~ 420	≤ 1000	≈ 12	5	5	100	≥ 1	≤ 1.0	○	○
SU421A - SMD	420	336 ~ 504	≤ 1000	≈ 15	5	5	100	≥ 1	≤ 1.0	○	○
SU471A - SMD	470	376 ~ 564	≤ 1000	≈ 15	5	5	100	≥ 1	≤ 1.0	○	○
SU601A - SMD	600	480 ~ 720	≤ 1400	≈ 15	5	5	100	≥ 1	≤ 1.0	○	○
SU801A - SMD	800	640 ~ 960	≤ 1600	≈ 15	5	5	100	≥ 1	≤ 1.0	○	○
SU091M - SMD	90	72 ~ 108	≤ 600	≈ 8	10	5	50	≥ 1	≤ 1.0	○	○
SU151M - SMD	150	120 ~ 180	≤ 600	≈ 10	10	5	50	≥ 1	≤ 1.0	○	○
SU231M - SMD	230	184 ~ 276	≤ 700	≈ 12	10	5	100	≥ 1	≤ 1.0	○	○
SU251M - SMD	250	200 ~ 300	≤ 700	≈ 12	10	5	100	≥ 1	≤ 1.0	○	○
SU351M - SMD	350	280 ~ 420	≤ 1000	≈ 12	10	5	100	≥ 1	≤ 1.0	○	○
SU421M - SMD	420	336 ~ 504	≤ 1000	≈ 15	10	5	100	≥ 1	≤ 1.0	○	○
SU471M - SMD	470	376 ~ 564	≤ 1000	≈ 15	10	5	100	≥ 1	≤ 1.0	○	○
SU601M - SMD	600	480 ~ 720	≤ 1400	≈ 15	10	5	100	≥ 1	≤ 1.0	○	○
SU801M - SMD	800	640 ~ 960	≤ 1600	≈ 15	10	5	100	≥ 1	≤ 1.0	○	○

Note:
1. The above parameters based on ITU - T K12 & IEC61643.311 standards.
2. "●" means GDT has gained the certification.
   "○" means GDT is no certification.

All Rights Reserved by Xiamen SET Electronics Co., Ltd. 2024-2026 V1.1

Packaging Information

Tape & Reel (SMD)

Item	Reel	Inner Box	Carton
Dimensions (mm)	Φ330 × 20.5	340 × 340 × 40	360 × 360 × 360
Quantity (PCS)	1000	2000	14000
Notes: Packaging dimensions and quantity are for reference only.			

All Rights Reserved by Xiamen SET Electronics Co., Ltd. 2024-2026 V1.1

Description

Gas Discharge Tube (GDT) is a single-gap or multi-gap switching overvoltage protection device. Under normal circumstances, the GDT is in a high-impedance state; when suffer a surge, the GDT will change from a high-impedance state to a low-impedance state, and release the surge energy to the ground, reducing the residual voltage of the circuit, thereby protecting the equipment circuit or protect the human body from the hazards of transient overvoltage. GDT is formed by high-temperature sealing of metal electrodes, metallized ceramics, inert gas or other mixed gases.

Features

- Fast Response
- Stable Performance Over Surface Life
- High Current Rating
- Low Capacitance
- High Insulation Resistance
- RoHS & REACH Compliant

Agency Information

Agency Symbol	Standards	The File No. and certification No. obtained by SETsafe | SETfuse
	UL497B	E513446

Applications

- New Energy
- Power supply

Dimensions (mm)

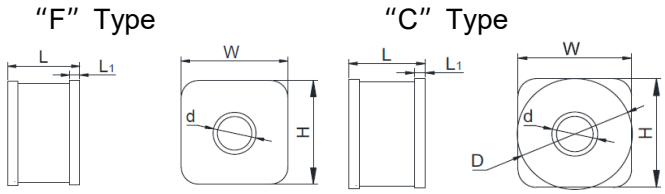

L	W	H	D	L_1	d
4.2 ± 0.3	6.2 ± 0.2	6.2 ± 0.2	Φ6.2 ± 0.2	0.6	Φ2.5

Part Numbering System

SS 601 A - SMD

- SMD: Lead Type (L: Lead wire, Brank: without Lead Wire, SMD)
- A: Impulse Discharge Current (A: 5 kA)
- 601: D.C.Spark-over Voltage (100 V/s) (601: 60 × 10^1)
- SS: Series: SS (4.2 × 6.2 × 6.2 mm)

Recommendation Pad Size (mm)

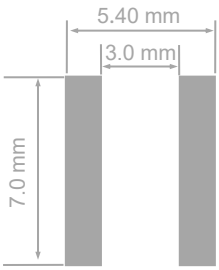

Reminder:
Part numbering system in the datasheet is only for selecting correct parameter and product features. Before placing order, please contact us for specifications and use the part number and product code in the specifications to place order to ensure the part is correct. Product code is the unique indentification.

All Rights Reserved by Xiamen SET Electronics Co., Ltd. 2024-2026 V1.1

Specifications

Model	D.C. Spark-over Voltage @100 V/s	Tolerance of V_s	Impulse Spark-over Voltage @1 kV/μs	Arc Voltage @0.5 A	Impulse Discharge Current @8/20 μs	Alternating Discharge Current @50Hz 1 s	Insulation Resistance		Capacitance 0.5 VDC @ 1MHz	Agency Approvals	
	Vs	*Vs*	*V*	*Va*	*In*	*I*	*VDC*	*IR*	*C*		
	V	V	V	V	kA	A (r.m.s.)	V	GΩ	(pF)	UL497B	TUV
SS071A - SMD	70	52 ~ 88	≤ 650	≈ 8	5	5	25	≥ 1	≤ 1.0	●	○
SS075A - SMD	75	57 ~ 93	≤ 650	≈ 8	5	5	25	≥ 1	≤ 1.0	●	○
SS091A - SMD	90	72 ~ 108	≤ 600	≈ 8	5	5	50	≥ 1	≤ 1.0	●	○
SS151A - SMD	150	120 ~ 180	≤ 600	≈ 10	5	5	50	≥ 1	≤ 1.0	●	○
SS201A - SMD	200	160 ~ 240	≤ 700	≈ 12	5	5	100	≥ 1	≤ 1.0	●	○
SS231A - SMD	230	184 ~ 276	≤ 700	≈ 12	5	5	100	≥ 1	≤ 1.0	●	○
SS301A - SMD	300	240 ~ 360	≤ 800	≈ 12	5	5	100	≥ 1	≤ 1.0	●	○
SS351A - SMD	350	280 ~ 420	≤ 1000	≈ 12	5	5	100	≥ 1	≤ 1.0	●	○
SS421A - SMD	420	336 ~ 504	≤ 1000	≈ 15	5	5	100	≥ 1	≤ 1.0	●	○
SS601A - SMD	600	480 ~ 720	≤ 1400	≈ 15	5	5	100	≥ 1	≤ 1.0	●	○
SS801A - SMD	800	640 ~ 960	≤ 1600	≈ 15	5	5	100	≥ 1	≤ 1.0	●	○

Note:
1. The above parameters based on ITU - T K12 & IEC61643.311 standards.
2. "●" means GDT has gained the certification."○" means GDT is no certification.
3. Operating Temperature -40 °C ~ +125 °C .

All Rights Reserved by Xiamen SET Electronics Co., Ltd. 2024-2026 V1.1

Packaging Information

Tape & Reel (SMD)

Item	Reel	Inner Box	Carton
Dimensions (mm)	Φ330 × 20.5	340 × 340 × 40	360 × 360 × 360
Quantity (PCS)	800	1600	11200
Notes: Packaging dimensions and quantity are for reference only.			

All Rights Reserved by Xiamen SET Electronics Co., Ltd. 2024-2026 V1.1

Description

Gas Discharge Tube (GDT) is a single-gap or multi-gap switching overvoltage protection device. Under normal circumstances, the GDT is in a high-impedance state; when suffer a surge, the GDT will change from a high-impedance state to a low-impedance state, and release the surge energy to the ground, reducing the residual voltage of the circuit, thereby protecting the equipment circuit or protect the human body from the hazards of transient overvoltage. GDT is formed by high-temperature sealing of metal electrodes, metallized ceramics, inert gas or other mixed gases.

Features

- Fast Response
- Stable Performance Over Surface Life
- High Current Rating
- Low Capacitance
- High Insulation Resistance
- RoHS & REACH Compliant

Agency Information

Agency Symbol	Standards	The File No. and certification No. obtained by SETsafe | SETfuse
	UL497B	E513446

Applications

- Telecom Equipment
- New Energy
- Power supply
- Irrigation System

Dimensions (mm)

L	W	H	D	L_2	d
5.0 ± 0.3	5.3 ± 0.2	5.3 ± 0.2	Φ5.0 ± 0.2	0.5 ± 0.2	Φ1.4

Part Numbering System

SD 091 A - SMD

- SMD: Lead Type (L: Lead wire, Brank: without Lead Wire, SMD)
- A: Impulse Discharge Current (A: 5 kA)
- 091: D.C.Spark-over Voltage (100 V/s) (091: 9×10^1)
- SD: Series: SD (Φ5.0 × 5.0 mm)

Recommendation Pad Size (mm)

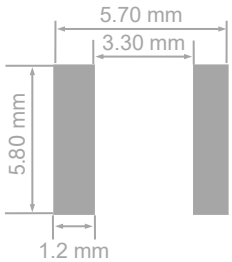

Reminder:
Part numbering system in the datasheet is only for selecting correct parameter and product features. Before placing order, please contact us for specifications and use the part number and product code in the specifications to place order to ensure the part is correct. Product code is the unique indentification.

All Rights Reserved by Xiamen SET Electronics Co., Ltd. 2024-2026 V1.1

Specifications

Model	D.C. Spark-over Voltage @100 V/s	Tolerance of V_s	Impulse Spark-over Voltage @1 kV/μs	Arc Voltage @0.5 A	Impulse Discharge Current @8/20 μs	Alternating Discharge Current @50Hz 1 s	Insulation Resistance		Capacitance 0.5 VDC @ 1MHz	Agency Approvals	
	Vs	*Vs*	*V*	*Va*	*In*	*I*	*VDC*	*IR*	*C*		
	V	V	V	V	kA	A (r.m.s.)	V	GΩ	(pF)	UL497B	TUV
SD071A - SMD	70	52 ~ 88	≤ 650	≈ 8	5	5	25	≥ 1	≤ 1.0	●	○
SD075A - SMD	75	57 ~ 93	≤ 650	≈ 8	5	5	25	≥ 1	≤ 1.0	●	○
SD091A - SMD	90	72 ~ 108	≤ 600	≈ 8	5	5	50	≥ 1	≤ 1.0	●	○
SD151A - SMD	150	120 ~ 180	≤ 600	≈ 10	5	5	50	≥ 1	≤ 1.0	●	○
SD231A - SMD	230	184 ~ 276	≤ 700	≈ 12	5	5	100	≥ 1	≤ 1.0	●	○
SD251A - SMD	250	200 ~ 300	≤ 800	≈ 12	5	5	100	≥ 1	≤ 1.0	●	○
SD351A - SMD	350	280 ~ 420	≤ 1000	≈ 12	5	5	100	≥ 1	≤ 1.0	●	○
SD421A - SMD	420	336 ~ 504	≤ 1000	≈ 15	5	5	100	≥ 1	≤ 1.0	●	○
SD471A - SMD	470	376 ~ 564	≤ 1200	≈ 15	5	5	100	≥ 1	≤ 1.0	●	○
SD601A - SMD	600	480 ~ 720	≤ 1400	≈ 15	5	5	100	≥ 1	≤ 1.0	●	○
SD801A - SMD	800	640 ~ 960	≤ 1600	≈ 15	5	5	100	≥ 1	≤ 1.0	●	○

Note:
1. The above parameters based on ITU - T K12 & IEC61643.311 standards.
2. "●" means GDT has gained the certification. "○" means GDT is no certification.
3. Operating Temperature -40 °C ~ +125 °C .

All Rights Reserved by Xiamen SET Electronics Co., Ltd. 2024-2026 V1.1

Packaging Information

Tape & Reel (SMD)

Item	Reel	Inner Box	Carton
Dimensions (mm)	Φ330 × 20.5	340 × 340 × 40	360 × 360 × 360
Quantity (PCS)	1000	2000	14000
Notes: Packaging dimensions and quantity are for reference only.			

All Rights Reserved by Xiamen SET Electronics Co., Ltd. 2024-2026 V1.1

Description

Gas Discharge Tube (GDT) is a single-gap or multi-gap switching overvoltage protection device. Under normal circumstances, the GDT is in a high-impedance state; when suffer a surge, the GDT will change from a high-impedance state to a low-impedance state, and release the surge energy to the ground, reducing the residual voltage of the circuit, thereby protecting the equipment circuit or protect the human body from the hazards of transient overvoltage. GDT is formed by high-temperature sealing of metal electrodes, metallized ceramics, inert gas or other mixed gases.

Features

- Fast Response
- Stable Performance Over Surface Life
- High Current Rating
- Low Capacitance
- High Insulation Resistance
- RoHS & REACH Compliant

Agency Information

Agency Symbol	Standards	The File No. and certification No. obtained by SETsafe | SETfuse
	UL1449	E322662
	UL497B	E513446
	TUV	No.B1072210003 Rev03

Applications

- Telecom Equipment
- New Energy
- Power supply

Dimensions (mm)

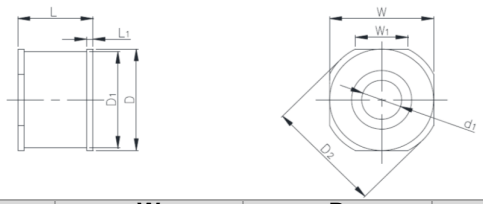

L	W	D	D_1
6.0 ± 0.3	8.3 ± 0.3	Φ8.3 ± 0.3	Φ7.9 ± 0.3
L_1	W_1	D_2	d_1
0.5	4.2	Φ9.3 ± 0.3	3.2

Part Numbering System

SE 601 H - SMD

- SMD: Lead Type (L: Lead wire, Brank: without Lead Wire, SMD)
- H: Impulse Discharge Current (A: 5 kA, M: 10 kA, H: 20 kA)
- 601: D.C.Spark-over Voltage (100 V/s) (601: 60×10^1)
- SE: Series: SM (Φ9.3 × 6 mm)

Recommendation Pad Size (mm)

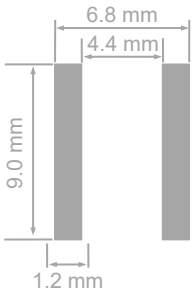

Reminder:
Part numbering system in the datasheet is only for selecting correct parameter and product features. Before placing order, please contact us for specifications and use the part number and product code in the specifications to place order to ensure the part is correct. Product code is the unique indentification.

All Rights Reserved by Xiamen SET Electronics Co., Ltd. 2024-2026 V1.1

Specifications

Model	D.C. Spark-over Voltage @100 V/s	Tolerance of V_s	Impulse Spark-over Voltage @1 kV/μs	Arc Voltage @0.5 A	Impulse Discharge Current @8/20 μs	Alternating Discharge Current @50Hz 1 s	Insulation Resistance		Capacitance 0.5 VDC @ 1MHz	Agency Approvals		
	Vs	*Vs*	*V*	*Va*	*In*	*I*	*VDC*	*IR*	*C*			
	V	V	V	V	kA	A (r.m.s.)	V	GΩ	(pF)	UL497B	UL1449	TUV
SE075M - SMD	75	57~ 93	≤ 650	≈ 8	10	10	25	≥ 1	≤ 1.5	●	N/A	●
SE091M - SMD	90	72 ~ 108	≤ 600	≈ 8	10	10	50	≥ 1	≤ 1.5	●	N/A	●
SE151M - SMD	150	120 ~ 180	≤ 600	≈ 10	10	10	50	≥ 1	≤ 1.5	●	N/A	●
SE231M - SMD	230	184 ~ 276	≤ 700	≈ 12	10	10	100	≥ 1	≤ 1.5	●	N/A	●
SE251M - SMD	250	200 ~ 300	≤ 700	≈ 12	10	10	100	≥ 1	≤ 1.5	●	N/A	●
SE351M - SMD	350	280 ~ 420	≤ 1000	≈ 12	10	10	100	≥ 1	≤ 1.5	●	N/A	●
SE421M - SMD	420	336 ~ 504	≤ 1000	≈ 15	10	10	100	≥ 1	≤ 1.5	●	N/A	●
SE471M - SMD	470	376 ~ 564	≤ 1200	≈ 15	10	10	100	≥ 1	≤ 1.5	●	N/A	●
SE601M - SMD	600	480 ~ 720	≤ 1400	≈ 15	10	10	100	≥ 1	≤ 1.5	●	N/A	●
SE801M - SMD	800	640 ~ 960	≤ 1600	≈ 15	10	10	100	≥ 1	≤ 1.5	●	N/A	●
SE102M - SMD	1000	800 ~ 1200	≤ 2000	≈ 18	10	10	100	≥ 1	≤ 1.5	N/A	●	●
SE152M - SMD	1500	1200 ~ 1800	≤ 2800	≈ 18	10	10	100	≥ 1	≤ 1.5	N/A	●	●
SE202M - SMD	2000	1600 ~ 2400	≤ 4000	≈ 18	10	10	100	≥ 1	≤ 1.5	N/A	●	●
SE075H - SMD	75	57~ 93	≤ 650	≈ 8	20	20	25	≥ 1	≤ 1.5	●	N/A	●
SE091H - SMD	90	72 ~ 108	≤ 600	≈ 8	20	20	50	≥ 1	≤ 1.5	●	●	●
SE151H - SMD	150	120 ~ 180	≤ 600	≈ 10	20	20	50	≥ 1	≤ 1.5	●	N/A	●
SE231H - SMD	230	184 ~ 276	≤ 700	≈ 12	20	20	100	≥ 1	≤ 1.5	●	N/A	●
SE251H - SMD	250	200 ~ 300	≤ 700	≈ 12	20	20	100	≥ 1	≤ 1.5	●	N/A	●
SE351H - SMD	350	280 ~ 420	≤ 1000	≈ 12	20	20	100	≥ 1	≤ 1.5	●	N/A	●
SE421H - SMD	420	336 ~ 504	≤ 1000	≈ 12	20	20	100	≥ 1	≤ 1.5	●	N/A	●
SE471H - SMD	470	376 ~ 564	≤ 1200	≈ 12	20	20	100	≥ 1	≤ 1.5	●	N/A	●
SE601H - SMD	600	480 ~ 720	≤ 1400	≈ 15	20	20	100	≥ 1	≤ 1.5	●	●	●
SE801H - SMD	800	640 ~ 960	≤ 1600	≈ 15	20	20	100	≥ 1	≤ 1.5	●	●	●
SE202A - SMD	2000	1600 ~ 2400	≤ 4000	≈ 18	5	3	100	≥ 1	≤ 1.5	N/A	○	●
SE252A - SMD	2500	2000 ~ 3000	≤ 4000	≈ 20	5	3	100	≥ 1	≤ 1.5	N/A	●	●
SE302A - SMD	3000	2400 ~ 3600	≤ 4500	≈ 20	5	3	100	≥ 1	≤ 1.5	N/A	●	●
SE362A - SMD	3600	2880 ~ 4320	≤ 5000	≈ 20	5	3	100	≥ 1	≤ 1.5	N/A	●	●
SE402A - SMD	4000	3200 ~ 4800	≤ 5500	≈ 20	5	3	100	≥ 1	≤ 1.5	N/A	○	●
SE452A - SMD	4500	3600 ~ 5400	≤ 6000	≈ 20	5	3	100	≥ 1	≤ 1.5	N/A	○	●

Note:
1. The above parameters based on ITU - T K12 & IEC61643.311 standards.
2. "●" means GDT has gained the certification. "○" means GDT is no certification.
3. Operating Temperature -40 °C ~ +125 °C .

All Rights Reserved by Xiamen SET Electronics Co., Ltd. 2024-2026 V1.1

Packaging Information

Tape & Reel (SMD)

Item	Reel	Inner Box	Carton
Dimensions (mm)	Φ330 × 20.5	340 × 340 × 40	360 × 360 × 360
Quantity (PCS)	600	1200	8400
Notes: Packaging dimensions and quantity are for reference only.			

All Rights Reserved by Xiamen SET Electronics Co., Ltd. 2024-2026 V1.1

GDT
Gas Discharge Tube

SK(-SMD) Series

Description

Gas Discharge Tube (GDT) is a single-gap or multi-gap switching overvoltage protection device. Under normal circumstances, the GDT is in a high-impedance state; when suffer a surge, the GDT will change from a high-impedance state to a low-impedance state, and release the surge energy to the ground, reducing the residual voltage of the circuit, thereby protecting the equipment circuit or protect the human body from the hazards of transient overvoltage. GDT is formed by high-temperature sealing of metal electrodes, metallized ceramics, inert gas or other mixed gases.

Features

- Fast Response
- Stable Performance Over Surface Life
- High Current Rating
- Low Capacitance
- High Insulation Resistance
- RoHS & REACH Compliant

Agency Information

Agency Symbol	Standards	The File No. and certification No. obtained by SETsafe | SETfuse
®	UL497B	On-going

Applications

- Telecom Equipment
- Power supply

Dimensions (mm)

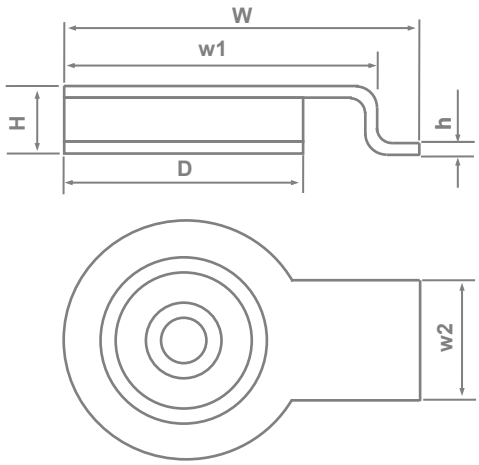

D	H	h	W	w_1	w_2
Φ8.0 ± 0.2	2.2 ± 0.3	0.4 ± 0.15	10.5 ± 0.3	9.5 ± 0.3	2.5 ± 0.2

Part Numbering System

SK 601 M - SMD

- SMD: Lead Type (L: Lead wire, Brank: without Lead Wire, SMD)
- M: Impulse Discharge Current (M: 10 kA, H: 20 kA)
- 601: D.C.Spark-over Voltage (100 V/s) (601: 60 × 10^1)
- SK: Series: SK (Φ8.0 × 2.2 mm)

Reminder:
Part numbering system in the datasheet is only for selecting correct parameter and product features. Before placing order, please contact us for specifications and use the part number and product code in the specifications to place order to ensure the part is correct. Product code is the unique indentification.

All Rights Reserved by Xiamen SET Electronics Co., Ltd. 2024-2026 V1.1

Specifications

Model	D.C. Spark-over Voltage @100 V/s	Tolerance of V_s	Impulse Spark-over Voltage @1 kV/μs	Arc Voltage @0.5 A	Impulse Discharge Current @8/20 μs	Alternating Discharge Current @50Hz 1 s	Insulation Resistance		Capacitance 0.5 VDC @ 1MHz	Agency Approvals	
	Vs	*Vs*	*V*	*Va*	*In*	*I*	*VDC*	*IR*	*C*		
	V	V	V	V	kA	A (r.m.s.)	V	GΩ	(pF)	UL497B	TUV
SK091M - SMD	90	63 ~ 118	≤ 600	≈ 8	10	5	50	≥ 1	≤ 1.5	○	○
SK351M - SMD	350	280 ~ 420	≤ 800	≈ 12	10	5	100	≥ 1	≤ 1.5	○	○
SK421M - SMD	420	336 ~ 504	≤ 1000	≈ 15	10	5	100	≥ 1	≤ 1.5	○	○
SK601M - SMD	600	480 ~ 720	≤ 1400	≈ 15	10	5	100	≥ 1	≤ 1.5	○	○
SK801M - SMD	800	640 ~ 960	≤ 1600	≈ 15	10	5	100	≥ 1	≤ 1.5	○	○
SK102M - SMD	1000	800 ~ 1200	≤ 2000	≈ 18	10	5	100	≥ 1	≤ 1.5	○	○
SK091H - SMD	90	63 ~ 118	≤ 600	≈ 8	20	5	50	≥ 1	≤ 1.5	○	○
SK351H - SMD	350	280 ~ 420	≤ 800	≈ 12	20	5	100	≥ 1	≤ 1.5	○	○
SK421H - SMD	420	336 ~ 504	≤ 1000	≈ 15	20	5	100	≥ 1	≤ 1.5	○	○
SK601H - SMD	600	480 ~ 720	≤ 1400	≈ 15	20	5	100	≥ 1	≤ 1.5	○	○
SK801H - SMD	800	640 ~ 960	≤ 1600	≈ 15	20	5	100	≥ 1	≤ 1.5	○	○

Note:
1. The above parameters based on ITU - T K12 & IEC61643.311 standards.
2. "●" means GDT has gained the certification. "○" means GDT is no certification.
3. Operating Temperature -40 °C ~ +125 °C .

All Rights Reserved by Xiamen SET Electronics Co., Ltd. 2024-2026 V1.1

Packaging Information

Tape & Reel (SMD)

Item	Reel	Inner Box	Carton
Dimensions (mm)	Φ330 × 20.5	200 × 200 × 30	440 × 250 × 230
Quantity (PCS)	1000	2000	14000
Notes: Packaging dimensions and quantity are for reference only.			

All Rights Reserved by Xiamen SET Electronics Co., Ltd. 2024-2026 V1.1

Description

Gas Discharge Tube (GDT) is a single-gap or multi-gap switching overvoltage protection device. Under normal circumstances, the GDT is in a high-impedance state; when suffer a surge, the GDT will change from a high-impedance state to a low-impedance state, and release the surge energy to the ground, reducing the residual voltage of the circuit, thereby protecting the equipment circuit or protect the human body from the hazards of transient overvoltage. GDT is formed by high-temperature sealing of metal electrodes, metallized ceramics, inert gas or other mixed gases.

Features

- Fast Response
- Stable Performance Over Surface Life
- High Current Rating
- Low Capacitance
- High Insulation Resistance
- RoHS & REACH Compliant

Agency Information

Agency Symbol	Standards	The File No. and certification No. obtained by SETsafe | SETfuse
	UL497B	E513446

Applications

- Telecom Equipment
- New Energy
- Power supply

Dimensions (mm)

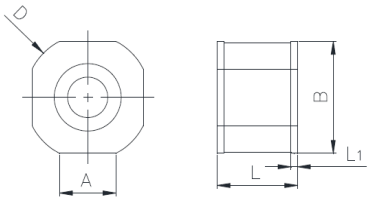

D	H	W	L_1	A
Φ9.3 ± 0.2	8.3 ± 0.2	6.0 ± 0.5	0.5 ± 0.1	4.2 ± 0.2

Part Numbering System

SC 601 H - SMD

- SMD: Lead Type (L: Lead wire, Brank: without Lead Wire, SMD)
- H: Impulse Discharge Current (H: 20 kA)
- 601: D.C.Spark-over Voltage (100 V/s) (601: 60 × 10^1)
- SC: Series: SC (6.0 × 8.3 × 8.3 mm)

Recommendation Pad Size (mm)

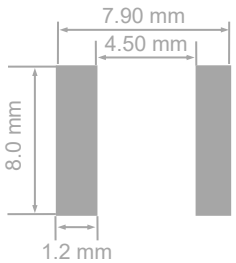

Reminder:
Part numbering system in the datasheet is only for selecting correct parameter and product features. Before placing order, please contact us for specifications and use the part number and product code in the specifications to place order to ensure the part is correct. Product code is the unique indentification.

All Rights Reserved by Xiamen SET Electronics Co., Ltd. 2024-2026 V1.1

Specifications

Model	D.C. Spark-over Voltage @100 V/s	Tolerance of V_s	Impulse Spark-over Voltage @1 kV/μs	Arc Voltage @0.5 A	Impulse Discharge Current @8/20 μs	Alternating Discharge Current @50Hz 1 s	Insulation Resistance		Capacitance 0.5 VDC @ 1MHz	Agency Approvals	
	Vs	*Vs*	*V*	*Va*	*In*	*I*	*VDC*	*IR*	*C*		
	V	V	V	V	kA	A (r.m.s.)	V	GΩ	(pF)	UL497B	TUV
SC071H - SMD	70	52 ~ 88	≤ 650	≈ 8	20	20	25	≥ 1	≤ 1.5	●	○
SC075H - SMD	75	57 ~ 93	≤ 650	≈ 8	20	20	25	≥ 1	≤ 1.5	●	○
SC091H - SMD	90	72 ~ 108	≤ 600	≈8	20	20	50	≥ 1	≤ 1.5	●	○
SC151H - SMD	150	120 ~ 180	≤ 600	≈10	20	20	50	≥ 1	≤ 1.5	●	○
SC231H - SMD	230	184 ~ 276	≤ 700	≈12	20	20	100	≥ 1	≤ 1.5	●	○
SC251H - SMD	250	200 ~ 300	≤ 700	≈12	20	20	100	≥ 1	≤ 1.5	●	○
SC351H - SMD	350	280 ~ 420	≤ 1000	≈12	20	20	100	≥ 1	≤ 1.5	●	○
SC421H - SMD	420	366 ~ 504	≤ 1000	≈15	20	20	100	≥ 1	≤ 1.5	●	○
SC471H - SMD	470	376 ~ 564	≤ 1200	≈15	20	20	100	≥ 1	≤ 1.5	●	○
SC601H - SMD	600	480 ~ 720	≤ 1400	≈15	20	20	100	≥ 1	≤ 1.5	●	○
SC801H - SMD	800	640 ~ 960	≤ 1600	≈ 15	20	20	100	≥ 1	≤ 1.5	●	○

Note:
1. The above parameters based on ITU - T K12 & IEC61643.311 standards.
2. "●" means GDT has gained the certification. "○" means GDT is no certification.
3. Operating Temperature -40 °C ~ +125 °C .

All Rights Reserved by Xiamen SET Electronics Co., Ltd. 2024-2026 V1.1

Packaging Information

Tape & Reel (SMD)

Item	Reel	Inner Box	Carton
Dimensions (mm)	Φ330 × 20.5	340 × 340 × 40	360 × 360 × 360
Quantity (PCS)	600	1200	8400
Notes: Packaging dimensions and quantity are for reference only.			

All Rights Reserved by Xiamen SET Electronics Co., Ltd. 2024-2026 V1.1

Description

Gas Discharge Tube (GDT) is a single-gap or multi-gap switching overvoltage protection device. Under normal circumstances, the GDT is in a high-impedance state; when suffer a surge, the GDT will change from a high-impedance state to a low-impedance state, and release the surge energy to the ground, reducing the residual voltage of the circuit, thereby protecting the equipment circuit or protect the human body from the hazards of transient overvoltage. GDT is formed by high-temperature sealing of metal electrodes, metallized ceramics, inert gas or other mixed gases.

Features

- Fast Response
- Stable Performance Over Surface Life
- High Current Rating
- Low Capacitance
- High Insulation Resistance
- RoHS & REACH Compliant

Agency Information

Agency Symbol	Standards	The File No. and certification No. obtained by SETsafe | SETfuse
	UL1449	E322662
	UL497B	E513446
	TUV	No.B1072210003 Rev03

Applications

- Telecom Equipment CATV
- New Energy
- Power supply
- Irrigation Equipment

Dimensions (mm)

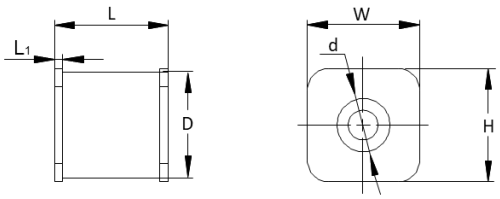

L	W	H	D	L_1	d
6.0 ± 0.4	6.0 ± 0.2	6.0 ± 0.2	Φ1.8	0.5	Φ2.5

Part Numbering System

SF 601 A - SMD

- SMD: Lead Type (L: Lead wire, Brank: without Lead Wire, SMD)
- A: Impulse Discharge Current (T: 3 kA, A: 5 kA, M: 10 kA)
- 601: D.C.Spark-over Voltage (100 V/s) (601: 60 × 10^1)
- SF: Series: SF (Φ 5.5× 6.0 mm)

Recommendation Pad Size (mm)

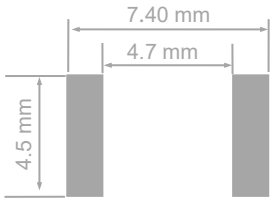

Reminder:
Part numbering system in the datasheet is only for selecting correct parameter and product features. Before placing order, please contact us for specifications and use the part number and product code in the specifications to place order to ensure the part is correct. Product code is the unique indentification.

All Rights Reserved by Xiamen SET Electronics Co., Ltd. 2024-2026 V1.1

Specifications

Model	D.C. Spark-over Voltage @100 V/s	Tolerance of V_s	Impulse Spark-over Voltage @1 kV/μs	Arc Voltage @0.5 A	Impulse Discharge Current @8/20 μs	Alternating Discharge Current @50Hz 1 s	Insulation Resistance		Capacitance 0.5 VDC @ 1MHz	Agency Approvals		
	Vs	*Vs*	*V*	*Va*	*In*	*I*	*VDC*	*IR*	*C*			
	V	V	V	V	kA	A (r.m.s.)	V	GΩ	(pF)	UL497B	UL1449	TUV
SF075A - SMD	75	57 ~ 93	≤ 650	≈ 8	5	5	50	≥ 1	≤ 1.0	●	N/A	●
SF091A - SMD	90	72 ~ 108	≤ 600	≈ 8	5	5	50	≥ 1	≤ 1.0	●	N/A	●
SF151A - SMD	150	120 ~ 180	≤ 600	≈ 10	5	5	50	≥ 1	≤ 1.0	●	N/A	●
SF231A - SMD	230	184 ~ 276	≤ 700	≈ 12	5	5	100	≥ 1	≤ 1.0	●	N/A	●
SF251A - SMD	250	200 ~ 300	≤ 700	≈ 12	5	5	100	≥ 1	≤ 1.0	●	N/A	●
SF351A - SMD	350	280 ~ 420	≤ 1000	≈ 12	5	5	100	≥ 1	≤ 1.0	●	N/A	●
SF421A - SMD	420	336 ~ 504	≤ 1000	≈ 15	5	5	100	≥ 1	≤ 1.0	●	N/A	●
SF471A - SMD	470	376 ~ 564	≤ 1200	≈ 15	5	5	100	≥ 1	≤ 1.0	●	N/A	●
SF601A - SMD	600	480 ~ 720	≤ 1400	≈ 15	5	5	100	≥ 1	≤ 1.0	●	N/A	●
SF801A - SMD	800	640 ~ 960	≤ 1600	≈ 15	5	5	100	≥ 1	≤ 1.0	●	N/A	●
SF102A - SMD	1000	800 ~ 1200	≤ 2000	≈ 18	5	5	100	≥ 1	≤ 1.0	N/A	○	●
SF152A - SMD	1500	1200 ~ 1800	≤ 2800	≈ 18	5	3	100	≥ 1	≤ 1.0	N/A	○	●
SF075M - SMD	75	57 ~ 93	≤ 650	≈ 8	10	5	25	≥ 1	≤ 1.0	●	N/A	●
SF091M - SMD	90	72 ~ 108	≤ 600	≈ 8	10	5	50	≥ 1	≤ 1.0	●	N/A	●
SF151M - SMD	150	120 ~ 180	≤ 600	≈ 10	10	5	50	≥ 1	≤ 1.0	●	N/A	●
SF231M - SMD	230	184 ~ 276	≤ 700	≈ 12	10	5	100	≥ 1	≤ 1.0	●	N/A	●
SF251M - SMD	250	200 ~ 300	≤ 700	≈ 12	10	5	100	≥ 1	≤ 1.0	●	N/A	●
SF351M - SMD	350	280 ~ 420	≤ 1000	≈ 12	10	5	100	≥ 1	≤ 1.0	●	N/A	●
SF421M - SMD	420	336 ~ 504	≤ 1000	≈ 15	10	5	100	≥ 1	≤ 1.0	●	N/A	●
SF471M - SMD	470	376 ~ 564	≤ 1200	≈ 15	10	5	100	≥ 1	≤ 1.0	●	N/A	●
SF601M - SMD	600	480 ~ 720	≤ 1400	≈ 15	10	5	100	≥ 1	≤ 1.0	●	N/A	●
SF801M - SMD	800	640 ~ 960	≤ 1600	≈ 15	10	5	100	≥ 1	≤ 1.0	●	N/A	●
SF202T - SMD	2000	1600 ~ 2400	≤ 4000	≈ 18	3	3	100	≥ 1	≤ 1.0	●	●	●
SF252T - SMD	2500	2000 ~ 3000	≤ 4000	≈ 20	3	3	100	≥ 1	≤ 1.0	N/A	●	●
SF302T - SMD	3000	2400 ~ 3600	≤ 4500	≈ 20	3	3	100	≥ 1	≤ 1.0	N/A	●	●
SF362T - SMD	3600	2880 ~ 4320	≤ 5000	≈ 20	3	3	100	≥ 1	≤ 1.0	N/A	●	●
SF402T - SMD	4000	3200 ~ 4800	≤ 5500	≈ 20	3	3	100	≥ 1	≤ 1.0	N/A	○	●
SF452T - SMD	4500	3600 ~ 5400	≤ 6000	≈ 20	3	3	100	≥ 1	≤ 1.0	N/A	○	●

Note:
1. The above parameters based on ITU - T K12 & IEC61643.311 standards.
2. "●" means GDT has gained the certification. "○" means GDT is no certification.
3. Operating Temperature -40 °C ~ +125 °C

All Rights Reserved by Xiamen SET Electronics Co., Ltd. 2024-2026 V1.1

Packaging Information

Tape & Reel (SMD)

Item	Reel	Inner Box	Carton
Dimensions (mm)	Φ330 × 20.5	340 × 340 × 40	360 × 360 × 360
Quantity (PCS)	700	1400	9800
Notes: Packaging dimensions and quantity are for reference only.			

All Rights Reserved by Xiamen SET Electronics Co., Ltd. 2024-2026 V1.1

GDT
Gas Discharge Tube

TS(-SMD) Series

Description

Gas Discharge Tube (GDT) is a single-gap or multi-gap switching overvoltage protection device. Under normal circumstances, the GDT is in a high-impedance state; when suffer a surge, the GDT will change from a high-impedance state to a low-impedance state, and release the surge energy to the ground, reducing the residual voltage of the circuit, thereby protecting the equipment circuit or protect the human body from the hazards of transient overvoltage. GDT is formed by high-temperature sealing of metal electrodes, metallized ceramics, inert gas or other mixed gases.

Features

- Fast Response
- Stable Performance Over Surface Life
- High Current Rating
- Low Capacitance
- High Insulation Resistance
- RoHS & REACH Compliant

Agency Information

Agency Symbol	Standards	The File No. and certification No. obtained by SETsafe | SETfuse
®	UL497B	On-going

Applications

- Telecom Equipment
- Power supply
- Security Equipment
- POE
- Ethernet

Dimensions (mm)

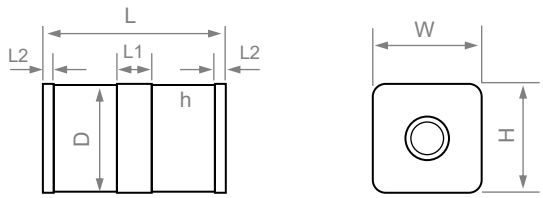

L	W	H	D	L1	L2
6.8 ± 0.3	3.5± 0.2	3.5 ± 0.2	Φ3.5 ± 0.2	1.2 ± 0.2	0.4 ± 0.2

Part Numbering System

TS 601 T - SMD

- SMD: Lead Type (L: Lead wire, Brank: without Lead Wire, SMD)
- T: Impulse Discharge Current (T: 3 kA)
- 601: D.C.Spark-over Voltage (100 V/s) (601: 60×10^1)
- TS: Series: TS (6.8 × 3.5 × 3.5 mm)

Recommendation Pad Size (mm)

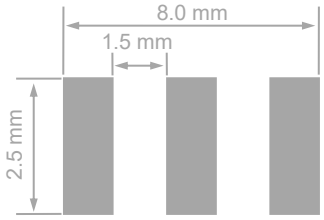

Reminder:
Part numbering system in the datasheet is only for selecting correct parameter and product features. Before placing order, please contact us for specifications and use the part number and product code in the specifications to place order to ensure the part is correct. Product code is the unique indentification.

All Rights Reserved by Xiamen SET Electronics Co., Ltd. 2024-2026 V1.1

Specifications

Model	D.C. Spark-over Voltage @100 V/s	Tolerance of V_s	Impulse Spark-over Voltage @1 kV/μs	Arc Voltage @0.5 A	Impulse Discharge Current @8/20 μs	Alternating Discharge Current @50Hz 1 s	Insulation Resistance		Capacitance 0.5 VDC @ 1MHz	Agency Approvals	
	Vs	*Vs*	*V*	*Va*	*In*	*I*	*VDC*	*IR*	*C*		
	V	V	V	V	kA	A (r.m.s.)	V	GΩ	(pF)	UL497B	TUV
TS091T - SMD	90	63 ~ 117	≤ 600	≈ 8	3	3	50	≥ 1	≤ 1.0	○	○
TS151T - SMD	150	120 ~ 180	≤ 650	≈ 10	3	3	50	≥ 1	≤ 1.0	○	○
TS231T - SMD	230	184 ~ 276	≤ 700	≈ 12	3	3	100	≥ 1	≤ 1.0	○	○
TS251T - SMD	250	200 ~ 300	≤ 700	≈ 12	3	3	100	≥ 1	≤ 1.0	○	○
TS351T - SMD	350	280 ~ 420	≤ 1000	≈ 12	3	3	100	≥ 1	≤ 1.0	○	○
TS421T - SMD	420	336 ~ 504	≤ 1000	≈ 15	3	3	100	≥ 1	≤ 1.0	○	○
TS471T - SMD	470	376 ~ 564	≤ 1200	≈ 15	3	3	100	≥ 1	≤ 1.0	○	○
TS601T - SMD	600	480 ~ 720	≤ 1400	≈ 15	3	3	100	≥ 1	≤ 1.0	○	○

Note:
1. The above parameters based on ITU - T K12 & IEC61643.311 standards.
2. "●" means GDT has gained the certification. "○" means GDT is no certification.
3. Operating Temperature -40 °C ~ +125 °C .

All Rights Reserved by Xiamen SET Electronics Co., Ltd. 2024-2026 V1.1

Packaging Information

Tape & Reel (SMD)

Item	Reel	Inner Box	Carton
Dimensions (mm)	Φ330 × 20.5	340 × 340 × 40	360 × 360 × 360
Quantity (PCS)	2000	4000	28000
Notes: Packaging dimensions and quantity are for reference only.			

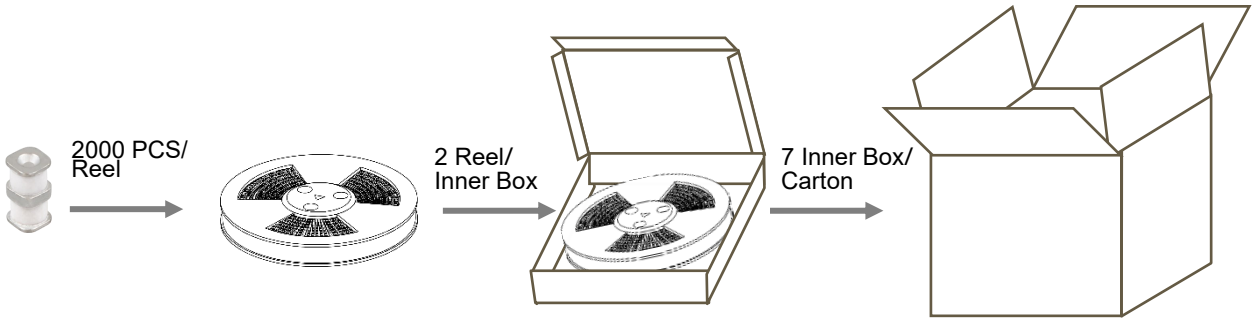

All Rights Reserved by Xiamen SET Electronics Co., Ltd. 2024-2026 V1.1

Description

Gas Discharge Tube (GDT) is a single-gap or multi-gap switching overvoltage protection device. Under normal circumstances, the GDT is in a high-impedance state; when suffer a surge, the GDT will change from a high-impedance state to a low-impedance state, and release the surge energy to the ground, reducing the residual voltage of the circuit, thereby protecting the equipment circuit or protect the human body from the hazards of transient overvoltage. GDT is formed by high-temperature sealing of metal electrodes, metallized ceramics, inert gas or other mixed gases.

Features

- Fast Response
- Stable Performance Over Surface Life
- High Current Rating
- Low Capacitance
- High Insulation Resistance
- RoHS & REACH Compliant

Agency Information

Agency Symbol	Standards	The File No. and certification No. obtained by SETsafe | SETfuse
	UL497B	E513446
	TUV	No.B1072210003 Rev03

Applications

- Telecom Equipment
- Power supply
- Security Equipment
- POE
- Ethernet

Dimensions (mm)

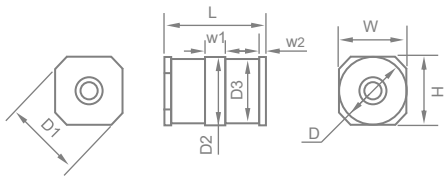

L	W	H	D	D_1
7.6 ± 0.3	5.0 ± 0.2	5.0 ± 0.2	Φ5.0 ± 0.2	Φ6.0
w_1	w_2	D_2	D_3	
1.5	0.5	Φ5.0 ± 0.2	Φ4.7 ± 0.2	

Part Numbering System

TZ 091 A - SMD

- SMD: Lead Type (L: Lead wire, Brank: without Lead Wire, SMD)
- A: Impulse Discharge Current (A: 5 kA, M: 10 kA)
- 091: D.C.Spark-over Voltage (100 V/s) (091: 9×10^1)
- TZ: Series: TZ (Φ5.0 × 7.6 mm)

Recommendation Pad Size (mm)

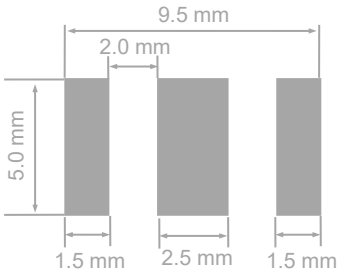

Reminder:
Part numbering system in the datasheet is only for selecting correct parameter and product features. Before placing order, please contact us for specifications and use the part number and product code in the specifications to place order to ensure the part is correct. Product code is the unique indentification.

All Rights Reserved by Xiamen SET Electronics Co., Ltd. 2024-2026 V1.1

Specifications

Model	D.C. Spark-over Voltage @100 V/s	Tolerance of V_s	Impulse Spark-over Voltage @1 kV/μs	Arc Voltage @0.5 A	Impulse Discharge Current @8/20 μs	Alternating Discharge Current @50Hz 1 s	Insulation Resistance		Capacitance 0.5 VDC @ 1MHz	Agency Approvals	
	Vs	*Vs*	*V*	*Va*	*In*	*I*	*VDC*	*IR*	*C*		
	V	V	V	V	kA	A (r.m.s.)	V	GΩ	(pF)	UL497B	TUV
TZ071A - SMD	70	52 ~ 88	≤ 650	≈ 8	5	5	25	≥ 1	≤ 1.0	●	●
TZ075A - SMD	75	57 ~ 93	≤ 650	≈ 8	5	5	25	≥ 1	≤ 1.0	●	●
TZ091A - SMD	90	72 ~ 108	≤ 600	≈ 8	5	5	50	≥ 1	≤ 1.0	●	●
TZ151A - SMD	150	120 ~ 180	≤ 600	≈ 10	5	5	50	≥ 1	≤ 1.0	●	●
TZ231A - SMD	230	184 ~ 276	≤ 700	≈ 12	5	5	100	≥ 1	≤ 1.0	●	●
TZ251A - SMD	250	200 ~ 300	≤ 700	≈ 12	5	5	100	≥ 1	≤ 1.0	●	●
TZ351A - SMD	350	280 ~ 420	≤ 1000	≈ 12	5	5	100	≥ 1	≤ 1.0	●	●
TZ421A - SMD	420	336 ~ 504	≤ 1000	≈ 15	5	5	100	≥ 1	≤ 1.0	●	●
TZ471A - SMD	470	376 ~ 564	≤ 1200	≈ 15	5	5	100	≥ 1	≤ 1.0	●	●
TZ601A - SMD	600	480 ~ 720	≤ 1400	≈ 15	5	5	100	≥ 1	≤ 1.0	●	●
TZ071M - SMD	70	52 ~ 88	≤ 650	≈ 8	10	10	25	≥ 1	≤ 1.0	●	●
TZ075M - SMD	75	57 ~ 93	≤ 650	≈ 8	10	10	25	≥ 1	≤ 1.0	●	●
TZ091M - SMD	90	72 ~ 108	≤ 600	≈ 8	10	10	50	≥ 1	≤ 1.0	●	●
TZ151M - SMD	150	120 ~ 180	≤ 600	≈ 10	10	10	50	≥ 1	≤ 1.0	●	●
TZ231M - SMD	230	184 ~ 276	≤ 700	≈ 12	10	10	100	≥ 1	≤ 1.0	●	●
TZ251M - SMD	250	200 ~ 300	≤ 700	≈ 12	10	10	100	≥ 1	≤ 1.0	●	●
TZ351M - SMD	350	280 ~ 420	≤ 1000	≈ 12	10	10	100	≥ 1	≤ 1.0	●	●
TZ421M - SMD	420	336 ~ 504	≤ 1000	≈ 15	10	10	100	≥ 1	≤ 1.0	●	●
TZ471M - SMD	470	376 ~ 564	≤ 1200	≈ 15	10	10	100	≥ 1	≤ 1.0	●	●
TZ601M - SMD	600	480 ~ 720	≤ 1400	≈ 15	10	10	100	≥ 1	≤ 1.0	●	●

Note:
1. The above parameters based on ITU - T K12 & IEC61643.311 standards.
2. "●" means GDT has gained the certification.
3. Operating Temperature -40 °C ~ +125 °C .

All Rights Reserved by Xiamen SET Electronics Co., Ltd. 2024-2026 V1.1

Packaging Information

Tape & Reel (SMD)

Item	Reel	Inner Box	Carton
Dimensions (mm)	Φ330 × 20.5	340 × 340 × 40	360 × 360 × 360
Quantity (PCS)	1000	2000	14000
Notes: Packaging dimensions and quantity are for reference only.			

All Rights Reserved by Xiamen SET Electronics Co., Ltd. 2024-2026 V1.1

Description

Gas Discharge Tube (GDT) is a single-gap or multi-gap switching overvoltage protection device. Under normal circumstances, the GDT is in a high-impedance state; when suffer a surge, the GDT will change from a high-impedance state to a low-impedance state, and release the surge energy to the ground, reducing the residual voltage of the circuit, thereby protecting the equipment circuit or protect the human body from the hazards of transient overvoltage. GDT is formed by high-temperature sealing of metal electrodes, metallized ceramics, inert gas or other mixed gases.

Features

- Fast Response
- Stable Performance Over Surface Life
- High Current Rating
- Low Capacitance
- High Insulation Resistance
- RoHS & REACH Compliant

Agency Information

Agency Symbol	Standards	The File No. and certification No. obtained by SETsafe | SETfuse
®	UL497B	On-going

Applications

- Power supply
- Security Equipment
- DC Power supply (12VVDC 24 VDC)

Dimensions (mm)

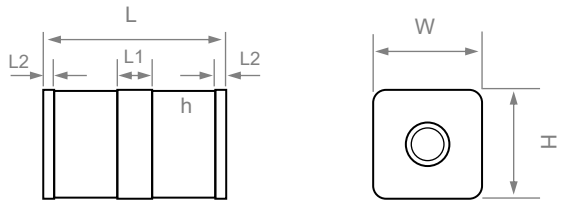

L	W	H	L1	L2
7.8 ± 0.3	5.0 ± 0.2	5.0 ± 0.2	1.6 ± 0.2	0.5 ± 0.2

Part Numbering System

TY 601 A - SMD

- SMD: Lead Type (L: Lead wire, Brank: without Lead Wire, SMD)
- A: Impulse Discharge Current (A: 5 kA)
- 601: D.C.Spark-over Voltage (100 V/s) (601: 60 × 10^1)
- TY: Series: TY (7.8 × 5.0 × 5.0 mm)

Recommendation Pad Size (mm)

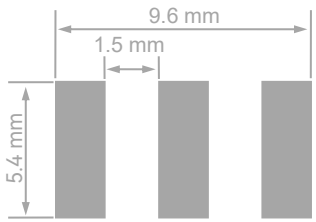

Reminder:
Part numbering system in the datasheet is only for selecting correct parameter and product features. Before placing order, please contact us for specifications and use the part number and product code in the specifications to place order to ensure the part is correct. Product code is the unique indentification.

All Rights Reserved by Xiamen SET Electronics Co., Ltd. 2024-2026 V1.1

Specifications

Model	D.C. Spark-over Voltage @100 V/s	Tolerance of V_s	Impulse Spark-over Voltage @1 kV/μs	Arc Voltage @0.5 A	Impulse Discharge Current @8/20 μs	Alternating Discharge Current @50Hz 1 s	Insulation Resistance		Capacitance 0.5 VDC @ 1MHz	Agency Approvals	
	Vs	*Vs*	*V*	*Va*	*In*	*I*	*VDC*	*IR*	*C*		
	V	V	V	V	kA	A (r.m.s.)	V	GΩ	(pF)	UL497B	TUV
TY231A - SMD	230	160 ~ 300	≤ 700	> 20	5	1	100	≥ 1	≤ 1.5	○	N/A
TY251A - SMD	250	175 ~ 325	≤ 700	> 20	5	1	100	≥ 1	≤ 1.5	○	N/A
TY351A - SMD	350	245 ~ 445	≤ 1000	> 30	5	1	100	≥ 1	≤ 1.5	○	N/A
TY421A - SMD	420	294 ~ 546	≤ 1000	> 35	5	1	100	≥ 1	≤ 1.5	○	N/A
TY601A - SMD	600	420 ~ 780	≤ 1400	> 35	5	1	100	≥ 1	≤ 1.5	○	N/A

Note:
1. The above parameters based on ITU - T K12 & IEC61643.311 standards.
2. "●" means GDT has gained the certification. "○" means GDT is no certification.
3. Operating Temperature -40 °C ~ +125 °C .

All Rights Reserved by Xiamen SET Electronics Co., Ltd. 2024-2026 V1.1

Packaging Information

Tape & Reel (SMD)

Item	Reel	Inner Box	Carton
Dimensions (mm)	Φ330 × 20.5	340 × 340 × 40	360 × 360 × 360
Quantity (PCS)	1000	2000	14000
Notes: Packaging dimensions and quantity are for reference only.			

All Rights Reserved by Xiamen SET Electronics Co., Ltd. 2024-2026 V1.1

Description

Gas Discharge Tube (GDT) is a single-gap or multi-gap switching overvoltage protection device. Under normal circumstances, the GDT is in a high-impedance state; when suffer a surge, the GDT will change from a high-impedance state to a low-impedance state, and release the surge energy to the ground, reducing the residual voltage of the circuit, thereby protecting the equipment circuit or protect the human body from the hazards of transient overvoltage. GDT is formed by high-temperature sealing of metal electrodes, metallized ceramics, inert gas or other mixed gases.

Features

- Fast Response
- Stable Performance Over Surface Life
- High Current Rating
- Low Capacitance
- High Insulation Resistance
- RoHS & REACH Compliant

Agency Information

Agency Symbol	Standards	The File No. and certification No. obtained by SETsafe | SETfuse
	UL497B	E513446

Applications

- Telecom Equipment
- New Energy
- Power supply

Dimensions (mm)

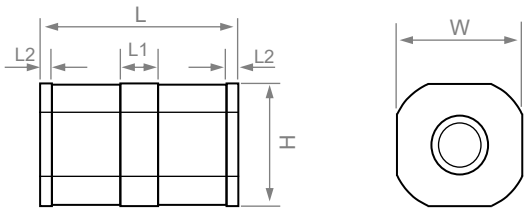

L	W	H	L1	L2
10.0 ± 0.5	8.3 ± 0.3	8.3 ± 0.3	1.5 ± 0.2	0.5 ± 0.2

Part Numbering System

TR 601 M - SMD

- SMD: Lead Type (L: Lead wire, Brank: without Lead Wire, SMD)
- M: Impulse Discharge Current (M: 10 kA, H: 20 kA)
- 601: D.C.Spark-over Voltage (100 V/s) (601: 60 × 10^1)
- TR: Series: TR (10.0 × 8.3 × 8.3 mm)

Recommendation Pad Size (mm)

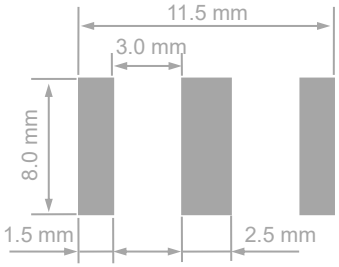

Reminder:
Part numbering system in the datasheet is only for selecting correct parameter and product features. Before placing order, please contact us for specifications and use the part number and product code in the specifications to place order to ensure the part is correct. Product code is the unique indentification.

All Rights Reserved by Xiamen SET Electronics Co., Ltd. 2024-2026 V1.1

Specifications

Model	D.C. Spark-over Voltage @100 V/s	Tolerance of V_s	Impulse Spark-over Voltage @1 kV/μs	Arc Voltage @0.5 A	Impulse Discharge Current @8/20 μs	Alternating Discharge Current @50Hz 1 s	Insulation Resistance		Capacitance 0.5 VDC @ 1MHz	Agency Approvals	
	Vs	*Vs*	*V*	*Va*	*In*	*I*	*VDC*	*IR*	*C*		
	V	V	V	V	kA	A (r.m.s.)	V	GΩ	(pF)	UL497B	TUV
TR091M - SMD	90	72 ~ 108	≤ 600	≈ 8	10	10	50	≥ 1	≤ 1.0	●	○
TR151M - SMD	150	120 ~ 180	≤ 600	≈ 10	10	10	50	≥ 1	≤ 1.0	●	○
TR231M - SMD	230	184 ~ 276	≤ 700	≈ 12	10	10	100	≥ 1	≤ 1.0	●	○
TR251M - SMD	250	200 ~ 300	≤ 700	≈ 12	10	10	100	≥ 1	≤ 1.0	●	○
TR351M - SMD	350	280 ~ 420	≤ 1000	≈ 12	10	10	100	≥ 1	≤ 1.0	●	○
TR421M - SMD	420	336 ~ 504	≤ 1000	≈ 15	10	10	100	≥ 1	≤ 1.0	●	○
TR471M - SMD	470	376 ~ 564	≤ 1200	≈ 15	10	10	100	≥ 1	≤ 1.0	●	○
TR601M - SMD	600	480 ~ 720	≤ 1400	≈ 15	10	10	100	≥ 1	≤ 1.0	●	○
TR075H - SMD	75	57~ 93	≤ 650	≈ 8	20	10	50	≥ 1	≤ 1.0	●	○
TR091H - SMD	90	72 ~ 108	≤ 600	≈ 8	20	20	50	≥ 1	≤ 1.0	●	○
TR151H - SMD	150	120 ~ 180	≤ 600	≈ 10	20	20	50	≥ 1	≤ 1.0	●	○
TR231H - SMD	230	184 ~ 276	≤ 700	≈ 12	20	20	100	≥ 1	≤ 1.0	●	○
TR251H - SMD	250	200 ~ 300	≤ 700	≈ 12	20	10	100	≥ 1	≤ 1.0	●	○
TR351H - SMD	350	280 ~ 420	≤ 1000	≈ 12	20	20	100	≥ 1	≤ 1.0	●	○
TR421H - SMD	420	336 ~ 504	≤ 1000	≈ 15	20	20	100	≥ 1	≤ 1.0	●	○
TR471H - SMD	470	376 ~ 564	≤ 1200	≈ 15	20	20	100	≥ 1	≤ 1.0	●	○
TR601H - SMD	600	480 ~ 720	≤ 1400	≈ 15	20	20	100	≥ 1	≤ 1.0	●	○

Note:
1. The above parameters based on ITU - T K12 & IEC61643.311 standards.
2. "●" means GDT has gained the certification. "○" means GDT is no certification.
3. Operating Temperature -40 °C ~ +125 °C .

All Rights Reserved by Xiamen SET Electronics Co., Ltd. 2024-2026 V1.1

Packaging Information

Tape & Reel (SMD)

Item	Reel	Inner Box	Carton
Dimensions (mm)	Φ330 × 20.5	340 × 340 × 40	360 × 360 × 360
Quantity (PCS)	500	500	4000
Notes: Packaging dimensions and quantity are for reference only.			

All Rights Reserved by Xiamen SET Electronics Co., Ltd. 2024-2026 V1.1

Description

Gas Discharge Tube (GDT) is a single-gap or multi-gap switching overvoltage protection device. Under normal circumstances, the GDT is in a high-impedance state; when suffer a surge, the GDT will change from a high-impedance state to a low-impedance state, and release the surge energy to the ground, reducing the residual voltage of the circuit, thereby protecting the equipment circuit or protect the human body from the hazards of transient overvoltage. GDT is formed by high-temperature sealing of metal electrodes, metallized ceramics, inert gas or other mixed gases.

Features

- Fast Response
- Stable Performance Over Surface Life
- High Current Rating
- Low Capacitance
- High Insulation Resistance
- RoHS & REACH Compliant

Agency Information

Agency Symbol	Standards	The File No. and certification No. obtained by SETsafe | SETfuse
®	UL497B	E513446

Dimensions (mm)

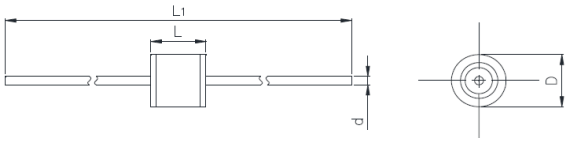

L	L_1	D	d
5.0 ± 0.3	62.0 ± 3.0	Φ5 ± 0.2	Φ0.8 ± 0.05

Applications

- Telecom Equipment
- New Energy
- Power supply
- Irrigation Equipment

Part Numbering System

SD 091 A - L

- L: Lead Type (L: Lead wire, Brank: Without Lead Wire)
- A: Impulse Discharge Current (A: 5 kA)
- 091: D.C. Spark-over Voltage (100 V/s) (091: 9×10^1)
- SD: Series: SD (Φ 5.0 × 5.0 mm)

Reminder:
Part numbering system in the datasheet is only for selecting correct parameter and product features. Before placing order, please contact us for specifications and use the part number and product code in the specifications to place order to ensure the part is correct. Product code is the unique indentification.

All Rights Reserved by Xiamen SET Electronics Co., Ltd. 2024-2026 V1.1

Specifications

Model	D.C. Spark-over Voltage @100 V/s	Tolerance of V_s	Impulse Spark-over Voltage @1 kV/μs	Arc Voltage @0.5 A	Impulse Discharge Current @8/20 μs	Alternating Discharge Current @50Hz 1 s	Insulation Resistance		Capacitance 0.5 VDC @ 1MHz	Agency Approvals	
	Vs	*Vs*	*V*	*Va*	*In*	*I*	*VDC*	*IR*	*C*		
	V	V	V	V	kA	A (r.m.s.)	V	GΩ	(pF)	UL497B	TUV
SD071A - L	70	52 ~ 88	≤ 650	≈ 8	5	5	25	≥ 1	≤ 1.0	●	○
SD075A - L	75	57 ~ 93	≤ 650	≈ 8	5	5	25	≥ 1	≤ 1.0	●	○
SD091A - L	90	72 ~ 108	≤ 600	≈ 8	5	5	50	≥ 1	≤ 1.0	●	○
SD151A - L	150	120 ~ 180	≤ 600	≈ 10	5	5	50	≥ 1	≤ 1.0	●	○
SD231A - L	230	184 ~ 276	≤ 700	≈ 12	5	5	100	≥ 1	≤ 1.0	●	○
SD251A - L	250	200 ~ 300	≤ 800	≈ 12	5	5	100	≥ 1	≤ 1.0	●	○
SD351A - L	350	280 ~ 420	≤ 1000	≈ 12	5	5	100	≥ 1	≤ 1.0	●	○
SD421A - L	420	336 ~ 504	≤ 1000	≈ 15	5	5	100	≥ 1	≤ 1.0	●	○
SD471A - L	470	376 ~ 564	≤ 1200	≈ 15	5	5	100	≥ 1	≤ 1.0	●	○
SD601A - L	600	480 ~ 720	≤ 1400	≈ 15	5	5	100	≥ 1	≤ 1.0	●	○
SD801A - L	800	640 ~ 960	≤ 1600	≈ 15	5	5	100	≥ 1	≤ 1.0	●	○

Note:
1. The above parameters based on ITU - T K12 & IEC61643.311 standards.
2. "●" means GDT has gained the certification, "○" means GDT is no certification.
3. Operating Temperature -40 °C ~ +125 °C.

All Rights Reserved by Xiamen SET Electronics Co., Ltd. 2024-2026 V1.1

Packaging Information

1. PE Box Package（DIP）

Item	PE Box	Inner Box	Carton
Dimensions (mm)	215 × 205 × 10.5	230 × 210 × 60	440 × 230 × 325
Quantity (PCS)	100	500	5000
Notes: Packaging dimensions and quantity are for reference only.			

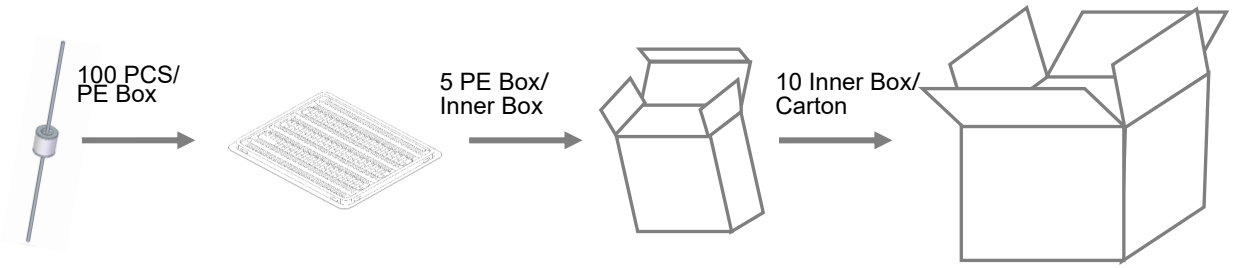

2. Tape & Reel (DIP)

Item	Reel	Inner Box	Carton
Dimensions (mm)	Φ340 × 73	345 × 345 × 80	360 × 360 × 360
Quantity (PCS)	1250	1250	5000
Notes: Packaging dimensions and quantity are for reference only.			

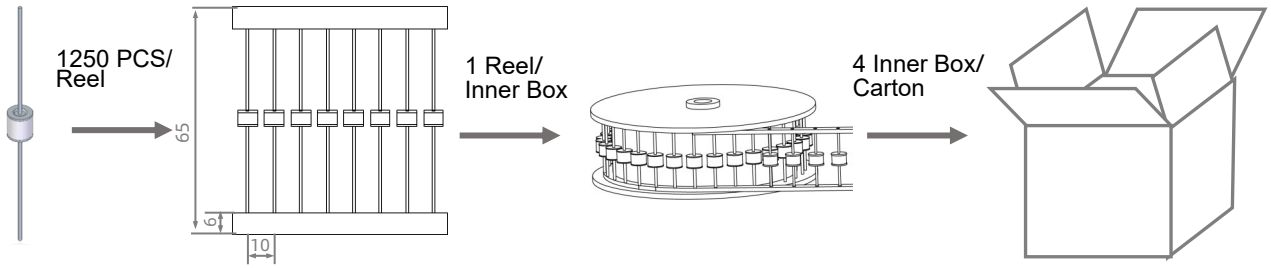

All Rights Reserved by Xiamen SET Electronics Co., Ltd. 2024-2026 V1.1

Description

Gas Discharge Tube (GDT) is a single-gap or multi-gap switching overvoltage protection device. Under normal circumstances, the GDT is in a high-impedance state; when suffer a surge, the GDT will change from a high-impedance state to a low-impedance state, and release the surge energy to the ground, reducing the residual voltage of the circuit, thereby protecting the equipment circuit or protect the human body from the hazards of transient overvoltage. GDT is formed by high-temperature sealing of metal electrodes, metallized ceramics, inert gas or other mixed gases.

Features

- Fast Response
- Stable Performance Over Surface Life
- High Current Rating
- Low Capacitance
- High Insulation Resistance
- RoHS & REACH Compliant

Agency Information

Agency Symbol	Standards	The File No. and certification No. obtained by SETsafe | SETfuse
	UL1449	E322662
	UL497B	E513446
	TUV	No.B1072210003 Rev03

Applications

- Telecom Equipment CATV
- New Energy
- Power supply
- Irrigation Equipment

Dimensions (mm)

Leaded “L” Type Straight “Axial” Devices

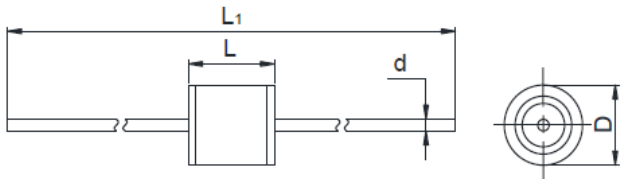

Core Devices

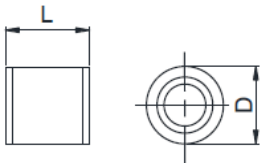

L_1	L	D	d
62.0 ± 3.0	6.0 ± 0.5	Φ5.5 ± 0.5	0.8 ± 0.05

Part Numbering System

SF 601 A - L

- L: Lead Type (L: Lead wire, Brank: Without Lead Wire)
- A: Impulse Discharge Current (T: 3 kA , A: 5 kA, M: 10 kA)
- 601: D.C. Spark-over Voltage (100 V/s) (601: 60 × 10^1)
- SF: Series: SF (Φ 5.5× 6.0 mm)

Reminder:
Part numbering system in the datasheet is only for selecting correct parameter and product features. Before placing order, please contact us for specifications and use the part number and product code in the specifications to place order to ensure the part is correct. Product code is the unique indentification.

All Rights Reserved by Xiamen SET Electronics Co., Ltd. 2024-2026 V1.1

Specifications

Model	D.C. Spark-over Voltage @100 V/s	Tolerance of V_s	Impulse Spark-over Voltage @1 kV/μs	Arc Voltage @0.5 A	Impulse Discharge Current @8/20 μs	Alternating Discharge Current @50Hz 1 s	Insulation Resistance		Capacitance 0.5 VDC @ 1MHz	Agency Approvals		
	Vs	*Vs*	*V*	*Va*	*In*	*I*	*VDC*	*IR*	*C*			
	V	V	V	V	kA	A (r.m.s.)	V	GΩ	(pF)	UL497B	UL1449	TUV
SF075A - L	75	57 ~ 93	≤ 650	≈ 8	5	5	50	≥ 1	≤ 1.0	●	N/A	●
SF091A - L	90	72 ~ 108	≤ 600	≈ 8	5	5	50	≥ 1	≤ 1.0	●	N/A	●
SF151A - L	150	120 ~ 180	≤ 600	≈ 10	5	5	50	≥ 1	≤ 1.0	●	N/A	●
SF231A - L	230	184 ~ 276	≤ 700	≈ 12	5	5	100	≥ 1	≤ 1.0	●	N/A	●
SF251A - L	250	200 ~ 300	≤ 700	≈ 12	5	5	100	≥ 1	≤ 1.0	●	N/A	●
SF351A - L	350	280 ~ 420	≤ 1000	≈ 12	5	5	100	≥ 1	≤ 1.0	●	N/A	●
SF421A - L	420	336 ~ 504	≤ 1000	≈ 15	5	5	100	≥ 1	≤ 1.0	●	N/A	●
SF471A - L	470	376 ~ 564	≤ 1200	≈ 15	5	5	100	≥ 1	≤ 1.0	●	N/A	●
SF601A - L	600	480 ~ 720	≤ 1400	≈ 15	5	5	100	≥ 1	≤ 1.0	●	N/A	●
SF801A - L	800	640 ~ 960	≤ 1600	≈ 15	5	5	100	≥ 1	≤ 1.0	●	N/A	●
SF102A - L	1000	800 ~ 1200	≤ 2000	≈ 18	5	5	100	≥ 1	≤ 1.0	N/A	○	●
SF152A - L	1500	1200 ~ 1800	≤ 2800	≈ 18	5	3	100	≥ 1	≤ 1.0	N/A	○	●
SF075M - L	75	57 ~ 93	≤ 650	≈ 8	10	5	25	≥ 1	≤ 1.0	●	N/A	●
SF091M - L	90	72 ~ 108	≤ 600	≈ 8	10	5	50	≥ 1	≤ 1.0	●	N/A	●
SF151M - L	150	120 ~ 180	≤ 600	≈ 10	10	5	50	≥ 1	≤ 1.0	●	N/A	●
SF231M - L	230	184 ~ 276	≤ 700	≈ 12	10	5	100	≥ 1	≤ 1.0	●	N/A	●
SF251M - L	250	200 ~ 300	≤ 700	≈ 12	10	5	100	≥ 1	≤ 1.0	●	N/A	●
SF351M - L	350	280 ~ 420	≤ 1000	≈ 12	10	5	100	≥ 1	≤ 1.0	●	N/A	●
SF421M - L	420	336 ~ 504	≤ 1000	≈ 15	10	5	100	≥ 1	≤ 1.0	●	N/A	●
SF471M - L	470	376 ~ 564	≤ 1200	≈ 15	10	5	100	≥ 1	≤ 1.0	●	N/A	●
SF601M - L	600	480 ~ 720	≤ 1400	≈ 15	10	5	100	≥ 1	≤ 1.0	●	N/A	●
SF801M - L	800	640 ~ 960	≤ 1600	≈ 15	10	5	100	≥ 1	≤ 1.0	●	N/A	●
SF202T - L	2000	1600 ~ 2400	≤ 4000	≈ 18	3	3	100	≥ 1	≤ 1.0	●	●	●
SF252T - L	2500	2000 ~ 3000	≤ 4000	≈ 20	3	3	100	≥ 1	≤ 1.0	N/A	●	●
SF302T - L	3000	2400 ~ 3600	≤ 4500	≈ 20	3	3	100	≥ 1	≤ 1.0	N/A	●	●
SF362T - L	3600	2880 ~ 4320	≤ 5000	≈ 20	3	3	100	≥ 1	≤ 1.0	N/A	●	●
SF402T - L	4000	3200 ~ 4800	≤ 5500	≈ 20	3	3	100	≥ 1	≤ 1.0	N/A	○	●
SF452T - L	4500	3600 ~ 5400	≤ 6000	≈ 20	3	3	100	≥ 1	≤ 1.0	N/A	○	●

Note:
1. The above parameters based on ITU - T K12 & IEC61643.311 standards.
2. "●" means GDT has gained the certification. "○" means GDT is no certification.
3. Operating Temperature -40 °C ~ +125 °C

All Rights Reserved by Xiamen SET Electronics Co., Ltd. 2024-2026 V1.1

Packaging Information

1. PE Box Package（DIP）

Item	PE Box	Inner Box	Carton
Dimensions (mm)	215 × 205 × 10.5	230 × 210 × 60	440 × 230 × 325
Quantity (PCS)	100	500	5000
Notes: Packaging dimensions and quantity are for reference only.			

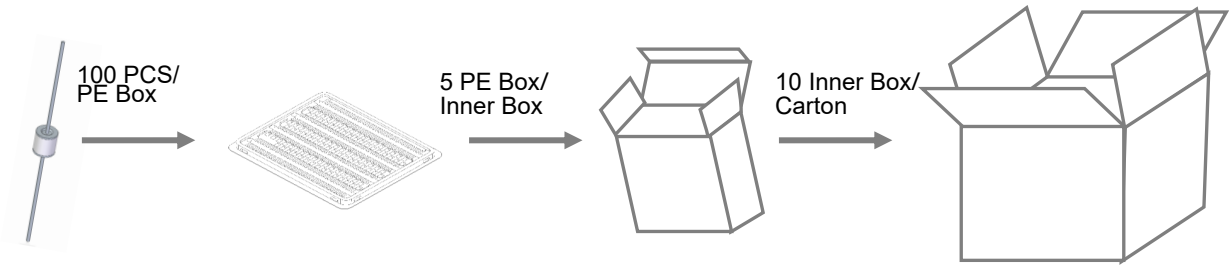

2. Tape & Reel (DIP)

Item	Reel	Inner Box	Carton
Dimensions (mm)	Φ340 × 73	345 × 345 × 80	360 × 360 × 360
Quantity (PCS)	1000	1000	4000
Notes: Packaging dimensions and quantity are for reference only.			

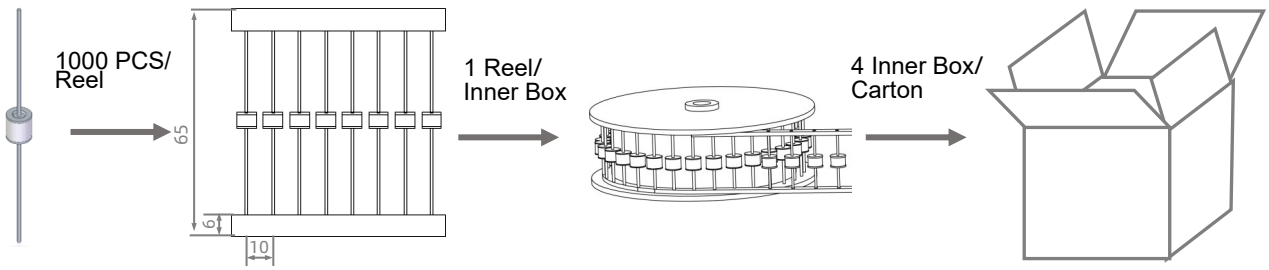

All Rights Reserved by Xiamen SET Electronics Co., Ltd. 2024-2026 V1.1

Description

Gas Discharge Tube (GDT) is a single-gap or multi-gap switching overvoltage protection device. Under normal circumstances, the GDT is in a high-impedance state; when suffer a surge, the GDT will change from a high-impedance state to a low-impedance state, and release the surge energy to the ground, reducing the residual voltage of the circuit, thereby protecting the equipment circuit or protect the human body from the hazards of transient overvoltage. GDT is formed by high-temperature sealing of metal electrodes, metallized ceramics, inert gas or other mixed gases.

Features

- Fast Response
- Stable Performance Over Surface Life
- High Current Rating
- Low Capacitance
- High Insulation Resistance
- RoHS & REACH Compliant

Agency Information

Agency Symbol	Standards	The File No. and certification No. obtained by SETsafe | SETfuse
	UL1449	E322662
	UL497B	E513446
	TUV	No.B1072210003 Rev03

Applications

- Telecom Equipment
- New Energy
- Power supply

Dimensions (mm)

Leaded “L” Type Straight “Axial” Devices

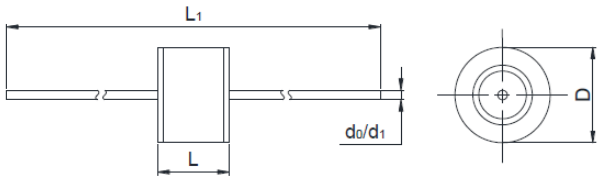

Core Devices

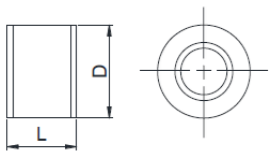

L_1	L	D	d_0 ①	d_1 ②
62.0 ± 3.0	6.0 ± 0.5	Φ8.0 ± 0.5	0.8 ± 0.05	1.0 ± 0.05

Remarks:
① This size is for In = 10 kA and below.
② This size is specific for In = 20 kA.

Part Numbering System

SE 601 H - L

- L: Lead Type (L: Lead wire, Brank: Without Lead Wire)
- H: Impulse Discharge Current (A: 5 kA , M: 10 kA, H: 20 kA)
- 601: D.C. Spark-over Voltage (100 V/s) (601: 60 × 10^1)
- SE: Series: SE (Φ 8.0× 6.0 mm)

Reminder:
Part numbering system in the datasheet is only for selecting correct parameter and product features. Before placing order, please contact us for specifications and use the part number and product code in the specifications to place order to ensure the part is correct. Product code is the unique indentification.

All Rights Reserved by Xiamen SET Electronics Co., Ltd. 2024-2026 V1.1

Specifications

Model	D.C. Spark-over Voltage @100 V/s	Tolerance of V_s	Impulse Spark-over Voltage @1 kV/μs	Arc Voltage @0.5 A	Impulse Discharge Current @8/20 μs	Alternating Discharge Current @50Hz 1 s	Insulation Resistance		Capacitance 0.5 VDC @ 1MHz	Agency Approvals		
	Vs	*Vs*	*V*	*Va*	*In*	*I*	*VDC*	*IR*	*C*			
	V	V	V	V	kA	A (r.m.s.)	V	GΩ	(pF)	UL497B	UL1449	TUV
SE075M - L	75	57~ 93	≤ 650	≈ 8	10	10	25	≥ 1	≤ 1.5	●	N/A	●
SE091M - L	90	72 ~ 108	≤ 600	≈ 8	10	10	50	≥ 1	≤ 1.5	●	N/A	●
SE151M - L	150	120 ~ 180	≤ 600	≈ 10	10	10	50	≥ 1	≤ 1.5	●	N/A	●
SE231M - L	230	184 ~ 276	≤ 700	≈ 12	10	10	100	≥ 1	≤ 1.5	●	N/A	●
SE251M - L	250	200 ~ 300	≤ 700	≈ 12	10	10	100	≥ 1	≤ 1.5	●	N/A	●
SE351M - L	350	280 ~ 420	≤ 1000	≈ 12	10	10	100	≥ 1	≤ 1.5	●	N/A	●
SE421M - L	420	336 ~ 504	≤ 1000	≈ 15	10	10	100	≥ 1	≤ 1.5	●	N/A	●
SE471M - L	470	376 ~ 564	≤ 1200	≈ 15	10	10	100	≥ 1	≤ 1.5	●	N/A	●
SE601M - L	600	480 ~ 720	≤ 1400	≈ 15	10	10	100	≥ 1	≤ 1.5	●	N/A	●
SE801M - L	800	640 ~ 960	≤ 1600	≈ 15	10	10	100	≥ 1	≤ 1.5	●	N/A	●
SE102M - L	1000	800 ~ 1200	≤ 2000	≈ 18	10	10	100	≥ 1	≤ 1.5	N/A	●	●
SE152M - L	1500	1200 ~ 1800	≤ 2800	≈ 18	10	10	100	≥ 1	≤ 1.5	N/A	●	●
SE202M - L	2000	1600 ~ 2400	≤ 4000	≈ 18	10	10	100	≥ 1	≤ 1.5	N/A	●	●
SE075H - L	75	57~ 93	≤ 650	≈ 8	20	20	25	≥ 1	≤ 1.5	●	N/A	●
SE091H - L	90	72 ~ 108	≤ 600	≈ 8	20	20	50	≥ 1	≤ 1.5	●	●	●
SE151H - L	150	120 ~ 180	≤ 600	≈ 10	20	20	50	≥ 1	≤ 1.5	●	N/A	●
SE231H - L	230	184 ~ 276	≤ 700	≈ 12	20	20	100	≥ 1	≤ 1.5	●	N/A	●
SE251H - L	250	200 ~ 300	≤ 700	≈ 12	20	20	100	≥ 1	≤ 1.5	●	N/A	●
SE351H - L	350	280 ~ 420	≤ 1000	≈ 12	20	20	100	≥ 1	≤ 1.5	●	N/A	●
SE421H - L	420	336 ~ 504	≤ 1000	≈ 12	20	20	100	≥ 1	≤ 1.5	●	N/A	●
SE471H - L	470	376 ~ 564	≤ 1200	≈ 12	20	20	100	≥ 1	≤ 1.5	●	N/A	●
SE601H - L	600	480 ~ 720	≤ 1400	≈ 15	20	20	100	≥ 1	≤ 1.5	●	●	●
SE801H - L	800	640 ~ 960	≤ 1600	≈ 15	20	20	100	≥ 1	≤ 1.5	●	●	●
SE202A - L	2000	1600 ~ 2400	≤ 4000	≈ 18	5	3	100	≥ 1	≤ 1.5	N/A	○	●
SE252A - L	2500	2000 ~ 3000	≤ 4000	≈ 20	5	3	100	≥ 1	≤ 1.5	N/A	●	●
SE302A - L	3000	2400 ~ 3600	≤ 4500	≈ 20	5	3	100	≥ 1	≤ 1.5	N/A	●	●
SE362A - L	3600	2880 ~ 4320	≤ 5000	≈ 20	5	3	100	≥ 1	≤ 1.5	N/A	●	●
SE402A - L	4000	3200 ~ 4800	≤ 5500	≈ 20	5	3	100	≥ 1	≤ 1.5	N/A	○	●
SE452A - L	4500	3600 ~ 5400	≤ 6000	≈ 20	5	3	100	≥ 1	≤ 1.5	N/A	○	●

Note:
1. The above parameters based on ITU - T K12 & IEC61643.311 standards.
2. "●" means GDT has gained the certification. "○" means GDT is no certification.
3. Operating Temperature -40 °C ~ +125 °C .

All Rights Reserved by Xiamen SET Electronics Co., Ltd. 2024-2026 V1.1

Packaging Information

1. PE Box Package（DIP）

Item	PE Box	Inner Box	Carton
Dimensions (mm)	215 × 205 × 10.5	230 × 210 × 60	440 × 230 × 325
Quantity (PCS)	100	500	5000
Notes: Packaging dimensions and quantity are for reference only.			

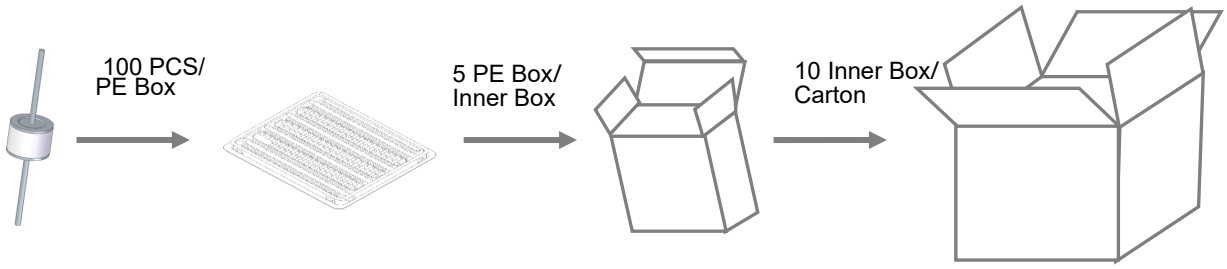

2. Tape & Reel (DIP)

Item	Reel	Inner Box	Carton
Dimensions (mm)	Φ340 × 73	345 × 345 × 80	360 × 360 × 360
Quantity (PCS)	1000	1000	4000
Notes: Packaging dimensions and quantity are for reference only.			

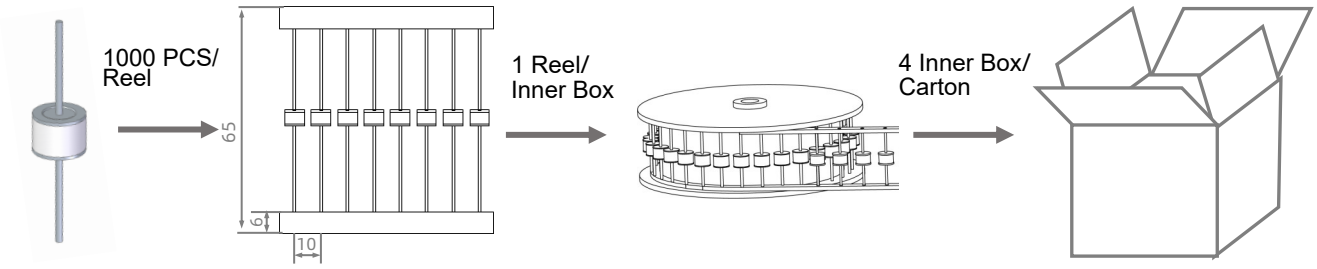

All Rights Reserved by Xiamen SET Electronics Co., Ltd. 2024-2026 V1.1

Description

Gas Discharge Tube (GDT) is a single-gap or multi-gap switching overvoltage protection device. Under normal circumstances, the GDT is in a high-impedance state; when suffer a surge, the GDT will change from a high-impedance state to a low-impedance state, and release the surge energy to the ground, reducing the residual voltage of the circuit, thereby protecting the equipment circuit or protect the human body from the hazards of transient overvoltage. GDT is formed by high-temperature sealing of metal electrodes, metallized ceramics, inert gas or other mixed gases.

Features

- Fast Response
- Stable Performance Over Surface Life
- High Current Rating
- Low Capacitance
- High Insulation Resistance
- RoHS & REACH Compliant

Agency Information

Agency Symbol	Standards	The File No. and certification No. obtained by SETsafe | SETfuse
	UL497B	E513446
	TUV	No.B1072210003 Rev03

Applications

- Telecom Equipment CATV
- New Energy
- Power supply
- POE
- Ethernet

Dimensions (mm)

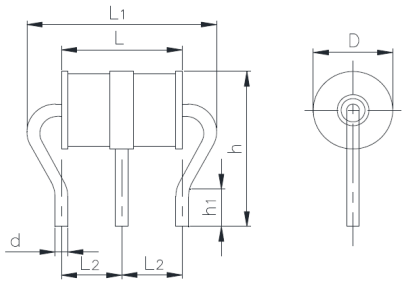

L	L1	D	d
7.6 ± 0.2	12.5 max	Φ5.0 ± 0.2	0.8
L2	**h**	**h_1**	
3.8 ± 0.3	10 ± 1.5	2.2	

Part Numbering System

TZ 091 A - L

- L: Lead Type (L: Lead wire, Brank: Without Lead Wire)
- A: Impulse Discharge Current (A: 5 kA, M: 10 kA)
- 091: D.C. Spark-over Voltage (100 V/s) (091: 9×10^1)
- TZ: Series: TZ (Φ 5.0 × 7.6 mm)

Reminder:
Part numbering system in the datasheet is only for selecting correct parameter and product features. Before placing order, please contact us for specifications and use the part number and product code in the specifications to place order to ensure the part is correct. Product code is the unique indentification.

All Rights Reserved by Xiamen SET Electronics Co., Ltd. 2024-2026 V1.1

Specifications

Model	D.C. Spark-over Voltage @100 V/s	Tolerance of V_s	Impulse Spark-over Voltage @1 kV/μs	Arc Voltage @0.5 A	Impulse Discharge Current @8/20 μs	Alternating Discharge Current @50Hz 1 s	Insulation Resistance		Capacitance 0.5 VDC @ 1MHz	Agency Approvals	
	V_s	V_s	V	V_a	I_n	I	V_{DC}	IR	C		
	V	V	V	V	kA	A (r.m.s.)	V	GΩ	(pF)	UL497B	TUV
TZ071A - L	70	53 ~ 87	≤ 650	≈ 8	5	5	25	≥ 1	≤ 1.0	●	●
TZ075A - L	75	57 ~ 93	≤ 650	≈ 8	5	5	25	≥ 1	≤ 1.0	●	●
TZ091A - L	90	72 ~ 108	≤ 600	≈ 8	5	5	50	≥ 1	≤ 1.0	●	●
TZ151A - L	150	120 ~ 180	≤ 600	≈ 10	5	5	50	≥ 1	≤ 1.0	●	●
TZ231A - L	230	184 ~ 276	≤ 700	≈ 12	5	5	100	≥ 1	≤ 1.0	●	●
TZ251A - L	250	200 ~ 300	≤ 700	≈ 12	5	5	100	≥ 1	≤ 1.0	●	●
TZ351A - L	350	280 ~ 420	≤ 1000	≈ 12	5	5	100	≥ 1	≤ 1.0	●	●
TZ421A - L	420	336 ~ 504	≤ 1000	≈ 15	5	5	100	≥ 1	≤ 1.0	●	●
TZ471A - L	470	376 ~ 564	≤ 1200	≈ 15	5	5	100	≥ 1	≤ 1.0	●	●
TZ601A - L	600	480 ~ 720	≤ 1400	≈ 15	5	5	100	≥ 1	≤ 1.0	●	●
TZ071M - L	70	53 ~ 88	≤ 650	≈ 8	10	10	25	≥ 1	≤ 1.0	●	●
TZ075M - L	75	57 ~ 93	≤ 650	≈ 8	10	10	25	≥ 1	≤ 1.0	●	●
TZ091M - L	90	72 ~ 108	≤ 600	≈ 8	10	10	50	≥ 1	≤ 1.0	●	●
TZ151M - L	150	120 ~ 180	≤ 600	≈ 10	10	10	50	≥ 1	≤ 1.0	●	●
TZ231M - L	230	184 ~ 276	≤ 700	≈ 12	10	10	100	≥ 1	≤ 1.0	●	●
TZ251M - L	250	200 ~ 300	≤ 700	≈ 12	10	10	100	≥ 1	≤ 1.0	●	●
TZ351M - L	350	280 ~ 420	≤ 1000	≈ 12	10	10	100	≥ 1	≤ 1.0	●	●
TZ421M - L	420	336 ~ 504	≤ 1000	≈ 15	10	10	100	≥ 1	≤ 1.0	●	●
TZ471M - L	470	376 ~ 564	≤ 1200	≈ 15	10	10	100	≥ 1	≤ 1.0	●	●
TZ601M - L	600	480 ~ 720	≤ 1400	≈ 15	10	10	100	≥ 1	≤ 1.0	●	●

Note:
1. The above parameters based on ITU - T K12 & IEC61643.311 standards.
2. "●" means GDT has gained the certification.
3. Operating Temperature -40 °C ~ +125 °C .

All Rights Reserved by Xiamen SET Electronics Co., Ltd. 2024-2026 V1.1

Packaging Information

PE Box Package（DIP）

Item	PE Box	Inner Box	Carton
Dimensions (mm)	215 × 205 × 10.5	230 × 210 × 60	440 × 250 × 325
Quantity (PCS)	100	500	5000
Notes: Packaging dimensions and quantity are for reference only.			

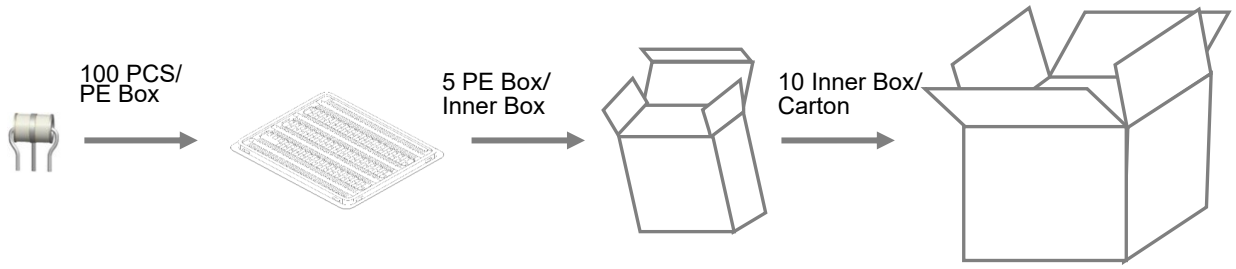

All Rights Reserved by Xiamen SET Electronics Co., Ltd. 2024-2026 V1.1

Description

Gas Discharge Tube (GDT) is a single-gap or multi-gap switching overvoltage protection device. Under normal circumstances, the GDT is in a high-impedance state; when suffer a surge, the GDT will change from a high-impedance state to a low-impedance state, and release the surge energy to the ground, reducing the residual voltage of the circuit, thereby protecting the equipment circuit or protect the human body from the hazards of transient overvoltage. GDT is formed by high-temperature sealing of metal electrodes, metallized ceramics, inert gas or other mixed gases.

Features

- Fast Response
- Stable Performance Over Surface Life
- High Current Rating
- Low Capacitance
- High Insulation Resistance
- RoHS & REACH Compliant

Agency Information

Agency Symbol	Standards	The File No. and certification No. obtained by SETsafe | SETfuse
UL®	UL497B	E513446

Dimensions (mm)

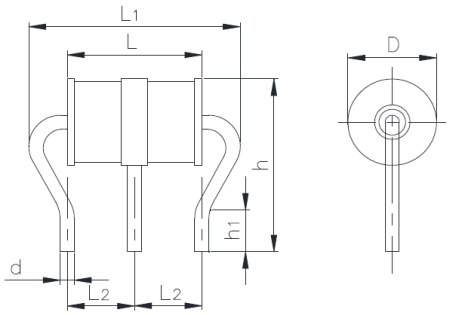

D	h	L	d
Φ6.0 ± 0.2	10.0 ± 1.0	8.0 ± 0.3	Φ0.8 ± 0.1
h_1	L_1	L_2	
2.5	12.5 Max	4.4 ± 0.3	

Applications

- Telecom Equipment
- New Energy

Part Numbering System

TB 601 M - L

- L: Lead Type (L: Lead wire, Brank: Without Lead Wire)
- M: Impulse Discharge Current (M: 10 kA)
- 601: D.C. Spark-over Voltage (100 V/s) (601: 60 × 10^1)
- TB: Series: TB (Φ 6.0 × 8.0 mm)

Reminder:
Part numbering system in the datasheet is only for selecting correct parameter **and product features. Before placing order, please contact us for specifications and use the part number and product code in the** specifications to place order to ensure the part is correct. Product code is the unique indentification.

All Rights Reserved by Xiamen SET Electronics Co., Ltd. 2024-2026 V1.1

Specifications

Model	D.C. Spark-over Voltage @100 V/s	Tolerance of V_s	Impulse Spark -over Voltage @1 kV/μs	Arc Voltage @0.5 A	Impulse Discharge Current @8/20 μs	Alternating Discharge Current @50Hz 1 s	Insulation Resistance		Capacitance 0.5 VDC @ 1MHz	Agency Approvals	
	Vs	*Vs*	*V*	*Va*	*In*	*I*	*VDC*	*IR*	*C*		
	V	V	V	V	kA	A (r.m.s.)	V	GΩ	(pF)	UL497B	TUV
TB075A - L	75	57~ 93	≤ 650	≈ 8	5	5	25	≥ 1	≤ 1.0	○	○
TB091A - L	90	72 ~ 108	≤ 600	≈ 8	5	5	50	≥ 1	≤ 1.0	○	○
TB151A - L	150	120 ~ 180	≤ 600	≈ 10	5	5	50	≥ 1	≤ 1.0	○	○
TB231A - L	230	184 ~ 276	≤ 700	≈ 12	5	5	100	≥ 1	≤ 1.0	○	○
TB251A - L	250	200 ~ 300	≤ 700	≈ 12	5	5	100	≥ 1	≤ 1.0	○	○
TB351A - L	350	280 ~ 420	≤ 1000	≈ 12	5	5	100	≥ 1	≤ 1.0	○	○
TB421A - L	420	336 ~ 504	≤ 1000	≈ 15	5	5	100	≥ 1	≤ 1.0	○	○
TB471A - L	470	376 ~ 564	≤ 1200	≈ 15	5	5	100	≥ 1	≤ 1.0	○	○
TB601A - L	600	480 ~ 720	≤ 1400	≈ 15	5	5	100	≥ 1	≤ 1.0	○	○
TB075M - L	75	57~ 93	≤ 650	≈ 8	10	5	25	≥ 1	≤ 1.0	●	○
TB091M - L	90	72 ~ 108	≤ 600	≈ 8	10	10	50	≥ 1	≤ 1.0	●	○
TB151M - L	150	120 ~ 80	≤ 600	≈ 10	10	10	50	≥ 1	≤ 1.0	●	○
TB231M - L	230	184 ~ 276	≤ 700	≈ 12	10	10	100	≥ 1	≤ 1.0	●	○
TB251M - L	250	200 ~ 300	≤ 700	≈ 12	10	10	100	≥ 1	≤ 1.0	●	○
TB351M - L	350	280 ~ 420	≤ 1000	≈ 12	10	10	100	≥ 1	≤ 1.0	●	○
TB421M - L	420	336 ~ 504	≤ 1000	≈ 15	10	10	100	≥ 1	≤ 1.0	●	○
TB471M - L	470	376 ~ 564	≤ 1200	≈ 15	10	10	100	≥ 1	≤ 1.0	●	○
TB601M - L	600	480 ~ 720	≤ 1200	≈ 15	10	10	100	≥ 1	≤ 1.0	●	○

Note:
1. The above parameters based on ITU - T K12 & IEC61643.311 standards.
2. "●" means GDT has gained the certification."○" means GDT is no certification.
3. Operating Temperature -40 °C ~ +125 °C .

All Rights Reserved by Xiamen SET Electronics Co., Ltd. 2024-2026 V1.1

Packaging Information

PE Box Package（DIP）

Item	PE Box	Inner Box	Carton
Dimensions (mm)	215 × 205 × 10.5	230 × 210 × 60	440 × 250 × 325
Quantity (PCS)	100	500	5000
Notes: Packaging dimensions and quantity are for reference only.			

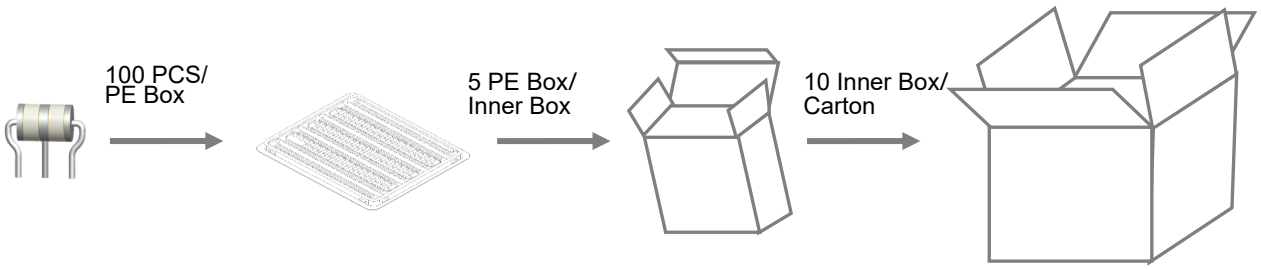

All Rights Reserved by Xiamen SET Electronics Co., Ltd. 2024-2026 V1.1

Description

Gas Discharge Tube (GDT) is a single-gap or multi-gap switching overvoltage protection device. Under normal circumstances, the GDT is in a high-impedance state; when suffer a surge, the GDT will change from a high-impedance state to a low-impedance state, and release the surge energy to the ground, reducing the residual voltage of the circuit, thereby protecting the equipment circuit or protect the human body from the hazards of transient overvoltage. GDT is formed by high-temperature sealing of metal electrodes, metallized ceramics, inert gas or other mixed gases.

Features

- Fast Response
- Stable Performance Over Surface Life
- High Current Rating
- Low Capacitance
- High Insulation Resistance
- RoHS & REACH Compliant

Agency Information

Agency Symbol	Standards	The File No. and certification No. obtained by SETsafe | SETfuse
®	UL497B	E513446

Dimensions (mm)

Leaded “L” Type Straight “Axial” Devices

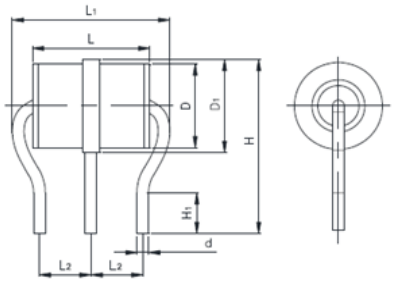

Applications

- Telecom Equipment
- New Energy
- Power supply

Core Devices

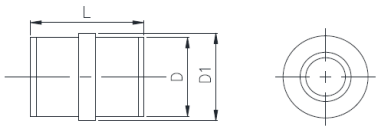

D	H	L	d
7.2	15.0 ± 1.0	10.0 ± 0.2	1.0 ± 0.1
D_1	H_1	L_1	L_2
Φ8.0 ± 0.2	3.5	13.4 Max	4.4 ± 0.3

Part Numbering System

TR 601 M - L

- L: Lead Type (L: Lead wire, Brank: Without Lead Wire)
- M: Impulse Discharge Current (M: 10 kA, H: 20 kA)
- 601: D.C. Spark-over Voltage (100 V/s) (601: 60 × 10^1)
- TR: Series: TR (Φ 8.0 × 10.0 mm)

Reminder:
Part numbering system in the datasheet is only for selecting correct parameter and product features. Before placing order, please contact us for specifications and use the part number and product code in the specifications to place order to ensure the part is correct. Product code is the unique indentification.

All Rights Reserved by Xiamen SET Electronics Co., Ltd. 2024-2026 V1.1

Specifications

Model	D.C. Spark-over Voltage @100 V/s	Tolerance of V_s	Impulse Spark-over Voltage @1 kV/μs	Arc Voltage @0.5 A	Impulse Discharge Current @8/20 μs	Alternating Discharge Current @50Hz 1 s	Insulation Resistance		Capacitance 0.5 VDC @ 1MHz	Agency Approvals	
	V_s	V_s	V	V_a	I_n	I	V_{DC}	IR	C		
	V	V	V	V	kA	A (r.m.s.)	V	GΩ	(pF)	UL497B	TUV
TR075M - *	75	57~ 93	≤ 650	≈ 8	10	10	50	≥ 1	≤ 1.0	●	○
TR091M - *	90	72 ~ 108	≤ 600	≈ 8	10	10	50	≥ 1	≤ 1.0	●	○
TR151M - *	150	120 ~ 180	≤ 600	≈ 10	10	10	50	≥ 1	≤ 1.0	●	○
TR231M - *	230	184 ~ 276	≤ 700	≈ 12	10	10	100	≥ 1	≤ 1.0	●	○
TR251M - *	250	200 ~ 300	≤ 700	≈ 12	10	10	100	≥ 1	≤ 1.0	●	○
TR351M - *	350	280 ~ 420	≤ 1000	≈ 12	10	10	100	≥ 1	≤ 1.0	●	○
TR421M - *	420	336 ~ 504	≤ 1000	≈ 15	10	10	100	≥ 1	≤ 1.0	●	○
TR471M - *	470	376 ~ 564	≤ 1200	≈ 15	10	10	100	≥ 1	≤ 1.0	●	○
TR601M - *	600	480 ~ 720	≤ 1400	≈ 15	10	10	100	≥ 1	≤ 1.0	●	○
TR075H - *	75	57~ 93	≤ 650	≈ 8	20	10	50	≥ 1	≤ 1.0	●	○
TR091H - *	90	72 ~ 108	≤ 600	≈ 8	20	20	50	≥ 1	≤ 1.0	●	○
TR151H - *	150	120 ~ 180	≤ 600	≈ 10	20	20	50	≥ 1	≤ 1.0	●	○
TR231H - *	230	184 ~ 276	≤ 700	≈ 12	20	20	100	≥ 1	≤ 1.0	●	○
TR251H - *	250	200 ~ 300	≤ 700	≈ 12	20	10	100	≥ 1	≤ 1.0	●	○
TR351H - *	350	280 ~ 420	≤ 1000	≈ 12	20	20	100	≥ 1	≤ 1.0	●	○
TR421H - *	420	336 ~ 504	≤ 1000	≈ 15	20	20	100	≥ 1	≤ 1.0	●	○
TR471H - *	470	376 ~ 564	≤ 1200	≈ 15	20	20	100	≥ 1	≤ 1.0	●	○
TR601H - *	600	480 ~ 720	≤ 1400	≈ 15	20	20	100	≥ 1	≤ 1.0	●	○

Note:
1. The above parameters based on ITU - T K12 & IEC61643.311 standards.
2. "●" means GDT has gained the certification.
   "○" means GDT is no certification.
3. Operating Temperature -40 °C ~ +125 °C .

All Rights Reserved by Xiamen SET Electronics Co., Ltd. 2024-2026 V1.1

Packaging Information

PE Box Package（DIP）

Item	PE Box	Inner Box	Carton
Dimensions (mm)	215 × 205 × 10.5	230 × 210 × 60	440 × 250 × 325
Quantity (PCS)	100	500	5000
Notes: Packaging dimensions and quantity are for reference only.			

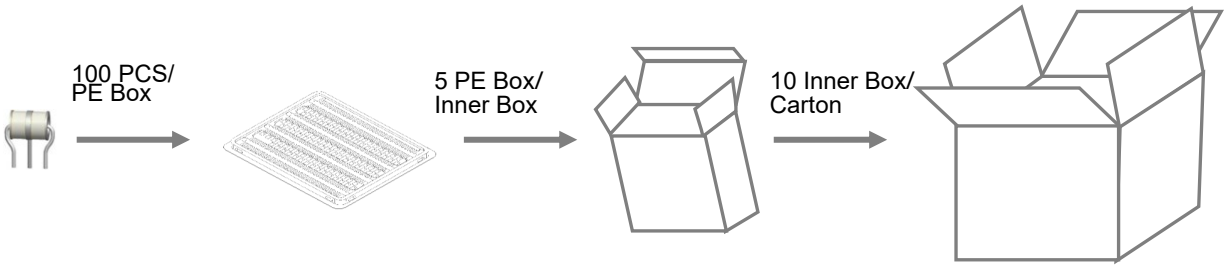

All Rights Reserved by Xiamen SET Electronics Co., Ltd. 2024-2026 V1.1

GDT
Gas Discharge Tube

Description

Gas Discharge Tube (GDT) is a single-gap or multi-gap switching overvoltage protection device. Under normal circumstances, the GDT is in a high-impedance state; when suffer a surge, the GDT will change from a high-impedance state to a low-impedance state, and release the surge energy to the ground, reducing the residual voltage of the circuit, thereby protecting the equipment circuit or protect the human body from the hazards of transient overvoltage. GDT is formed by high-temperature sealing of metal electrodes, metallized ceramics, inert gas or other mixed gases.

Features

- Fast Response
- Stable Performance Over Surface Life
- High Current Rating
- Low Capacitance
- High Insulation Resistance
- RoHS & REACH Compliant

Agency Information

Agency Symbol	Standards	The File No. and certification No. obtained by SETsafe | SETfuse
	UL1449	E322662
c	UL1449	E322662

Applications

- Surge Protective Device
- New Energy

Dimensions (mm)

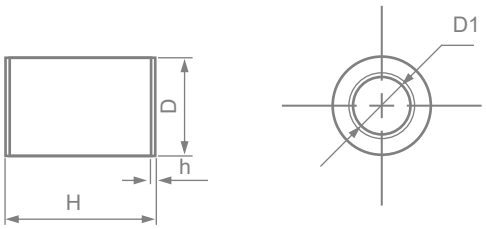

D	D_1	H	h
Φ11.8 ± 0.3	Φ6.9	17.0 ± 0.5	0.5

Notes: May increase each kind of connect mode according to the customer different demand.

Part Numbering System

SP A 601 D - XX

- Lead Type
  A: No Lead, B: Single Lead,
  C: With Lead, 0、1、2.....
  With Different Lead)
- Nominal Discharge Current
  (D: 40 kA)
- D.C. Spark-over Voltage (100 V/s)
  (601: 60 × 10^1)
- Product Structure:
  Φ 11.8 × 17.0 mm
- Series: SP

Reminder:
Part numbering system in the datasheet is only for selecting correct parameter and product features. Before placing order, please contact us for specifications and use the part number and product code in the specifications to place order to ensure the part is correct. Product code is the unique indentification.

All Rights Reserved by Xiamen SET Electronics Co., Ltd. 2024-2026 V1.1

Specifications

Model			SPA351D-XX	SPA601D-XX	SPA801D-XX	Units
Category			II	II	II	
Application			N - PE	N - PE	N - PE	
Nominal D.C. Spark-over Voltage (100 V/s)			350	600	800	V
D.C. Spark-over Voltage (100 V/s)			280 ~ 420	480 ~ 720	640 ~ 960	V
Impulse Spark-over Voltage @1 kV/μs			≤ 900	≤ 1200	≤ 1400	V
GB/T18802.311						
Nominal Impulse Discharge Current @8/20 μs I_n			40	40	40	kA
Maximum Impulse Discharge Current @8/20 μs I_{max}			60	60	60	kA
Class I / II (Comply with IEC61643-11)						
Max Continuous Operating Voltage U_c 50/60 Hz			110	255	275	Vrms
Follow Current Cut-off Ability AC 50/60 Hz I_f			100	100	100	Arms
Nominal Discharge Current @8/20 μs I_n			30	30	30	kA
Maximum Discharge Current @8/20 μs I_{max}			60	60	60	kA
Impulse Discharge Current @10/350 μs			12.5	12.5	12.5	kA
Insulation Resistance (100 VDC)			> 1000	> 1000	> 1000	MΩ
Capacitance at 100 kHz			< 6	< 6	< 6	pF
Agency Approvals	TUV		●	●	●	
	UL1449		●	●	●	
	TUV		○	○	○	

Note:

1. The above parameters based on ITU-T K12 & IEC61643.311、IEC61643.11 standards.
2. Connect mode according to the customer different demand.
3. "●" means GDT has gained the certification, "○" means GDT is no certification.
4. Operating Temperature -40 °C ~ +125 °C .

All Rights Reserved by Xiamen SET Electronics Co., Ltd. 2024-2026 V1.1

Packaging Information

PE Box Package

Item	PE Box	Inner Box	Carton
Dimensions (mm)	225 × 205 × 16	230 × 210 × 98	440 × 250 × 250
Quantity (PCS)	48	240	960
Notes: Packaging dimensions and quantity are for reference only.			

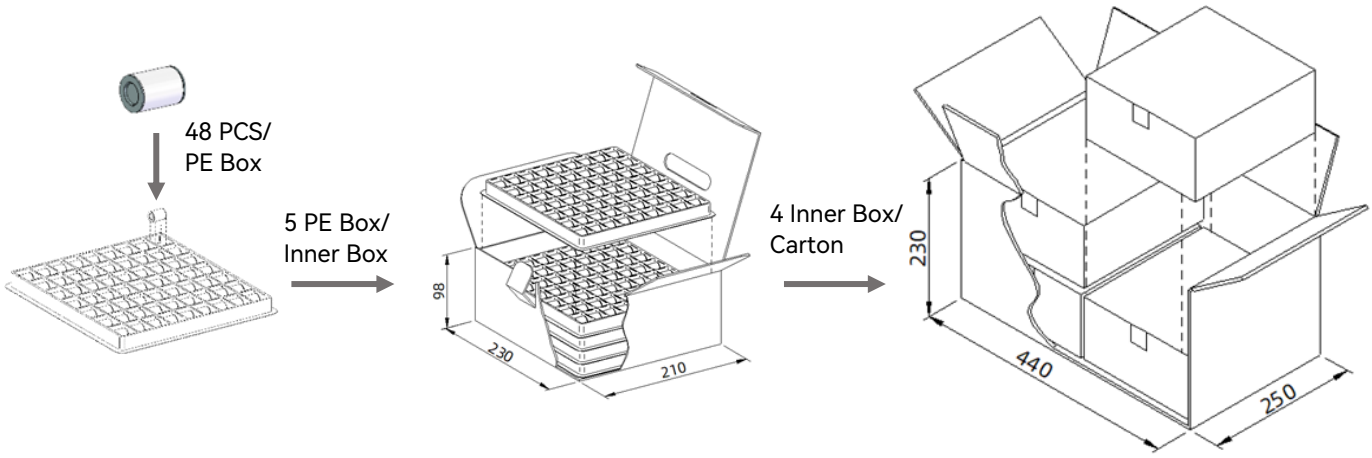

The above picture packaging is only suitable for type A products. For the other appearance and packaging mode and quantity, please refer to the specification.

All Rights Reserved by Xiamen SET Electronics Co., Ltd. 2024-2026 V1.1

Description

Gas Discharge Tube (GDT) is a single-gap or multi-gap switching overvoltage protection device. Under normal circumstances, the GDT is in a high-impedance state; when suffer a surge, the GDT will change from a high-impedance state to a low-impedance state, and release the surge energy to the ground, reducing the residual voltage of the circuit, thereby protecting the equipment circuit or protect the human body from the hazards of transient overvoltage. GDT is formed by high-temperature sealing of metal electrodes, metallized ceramics, inert gas or other mixed gases.

Features

- Fast Response
- Stable Performance Over Surface Life
- High Current Rating
- Low Capacitance
- High Insulation Resistance
- RoHS & REACH Compliant

Agency Information

Agency Symbol	Standards	The File No. and certification No. obtained by SETsafe | SETfuse
	UL1449	E322662
	UL1449	E322662
	TUV	No.B1072210003 Rev03

Applications

- Surge Protective Device
- Telecom Equipment
- New Energy

Dimensions (mm)

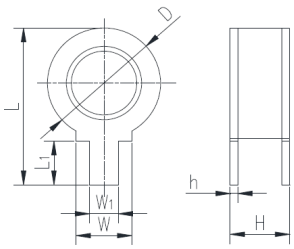

D	L	W_1	W
Φ11.8 ± 0.3	16.8 ± 0.3	3.0	5.8
H	**L_1**	**h**	
6.2 ± 0.3	4.7	0.8	

Notes: May increase each kind of connect mode according to the customer different demand.

Part Numbering System

SP B 601 H - XX

- Lead Type
  A: No Lead, B: Single Lead,
  C: With Lead, 0、1、2.....
  With Different Lead)
- Nominal Discharge Current
  (H: 20 kA)
- D.C. Spark-over Voltage (100 V/s)
  (601: 60 × 10^1)
- Product Structure:
  Φ 11.8 × 6.2 mm
- Series: SP

Reminder:
Part numbering system in the datasheet is only for selecting correct parameter and product features. Before placing order, please contact us for specifications and use the part number and product code in the specifications to place order to ensure the part is correct. Product code is the unique indentification.

All Rights Reserved by Xiamen SET Electronics Co., Ltd. 2024-2026 V1.1

Specifications

Model			SPB091H-XX	SPB151H-XX	SPB351H-XX	SPB601H-XX	Units
Category			II	II	II	II	
Application			N - PE	N - PE	N - PE	N - PE	
Nominal D.C. Spark-over Voltage (100 V/s)			90	150	350	600	V
D.C. Spark-over Voltage (100 V/s)			72 ~ 108	120 ~ 180	280 ~ 420	480 ~ 720	V
Impulse Spark-over Voltage @1 kV/μs			< 700	< 700	< 900	< 1400	V
GB/T18802.311							
Nominal Impulse Discharge Current @8/20 μs I_n			20	20	20	20	kA
Maximum Impulse Discharge Current @8/20 μs I_{max}			40	40	40	40	kA
Class Ⅰ / Ⅱ (Comply with IEC61643-11)							
Max Continuous Operating Voltage U_c 50/60 Hz			-	-	110	255	Vrms
Follow Current Cut-off Ability AC 50/60 Hz I_f			-	-	100	100	Arms
Nominal Discharge Current @8/20 μs I_n			20	20	20	20	kA
Maximum Discharge Current @8/20 μs I_{max}			40	40	40	40	kA
Impulse Discharge Current @10/350 μs			4	4	4	4	kA
Insulation Resistance (100 VDC)			> 1000	> 1000	> 1000	> 1000	MΩ
Capacitance at 100 kHz			< 5	< 5	< 5	< 5	pF
Agency Approvals	UL1449		●	○	●	●	
	UL1449		●	○	●	●	
	TUV		●	●	●	●	

Note:

1. The above parameters based on ITU-T K12 & IEC61643.311、IEC61643.11 standards.
2. Connect mode according to the customer different demand.
3. "●" means GDT has gained the certification, "○" means GDT is no certification.
4. Operating Temperature -40 °C ~ +125 °C .

All Rights Reserved by Xiamen SET Electronics Co., Ltd. 2024-2026 V1.1

Specifications

Model			SPB801H - XX	SPB102H - XX	SPB152H - XX	SPB202H - XX	Units
Category			II	II	II	II	
Application			N - PE	N - PE	N - PE	N - PE	
Nominal D.C. Spark-over Voltage (100 V/s)			800	1000	1500	2000	V
D.C. Spark-over Voltage (100 V/s)			640 ~ 960	800 ~ 1200	1200 ~ 1800	1600 ~ 2400	V
Impulse Spark-over Voltage @1 kV/μs			< 1600	< 1800	< 2800	< 4000	V
GB/T18802.311							
Nominal Impulse Discharge Current @8/20 μs I_n			20	20	20	20	kA
Maximum Impulse Discharge Current @8/20 μs I_{max}			40	40	40	40	kA
Class Ⅰ / Ⅱ (Comply with IEC61643-11)							
Max Continuous Operating Voltage U_c 50/60 Hz			275	320	320	440	Vrms
Follow Current Cut-off Ability AC 50/60 Hz I_f			100	100	100	100	Arms
Nominal Discharge Current @8/20 μs I_n			20	20	20	20	kA
Maximum Discharge Current @8/20 μs I_{max}			40	40	40	40	kA
Impulse Discharge Current @10/350 μs			4	4	4	4	kA
Insulation Resistance (100 VDC)			> 1000	> 1000	> 1000	> 1000	MΩ
Capacitance at 100 kHz			< 5	< 5	< 5	< 5	pF
Agency Approvals	UL1449		●	●	●	○	
	UL1449		●	●	●	○	
	TUV		●	●	●	●	

Note:

1. The above parameters based on ITU-T K12 & IEC61643.311、IEC61643.11 standards.
2. Connect mode according to the customer different demand.
3. "●" means GDT has gained the certification, "○" means GDT is no certification.
4. Operating Temperature -40 °C ~ +125 °C .

All Rights Reserved by Xiamen SET Electronics Co., Ltd. 2024-2026 V1.1

Packaging Information

PE Box Package

Item	PE Box	Inner Box	Carton
Dimensions (mm)	225 × 205 × 16	230 × 210 × 98	440 × 250 × 250
Quantity (PCS)	144	720	2880
Notes: Packaging dimensions and quantity are for reference only.			

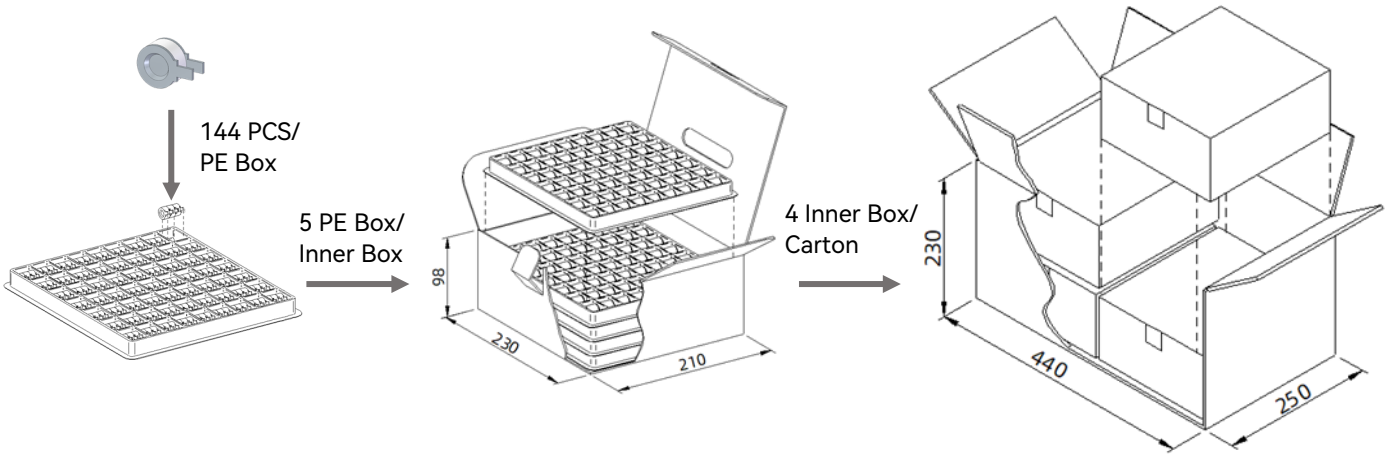

The above picture packaging is only suitable for type A products. For the other appearance and packaging mode and quantity, please refer to the specification.

All Rights Reserved by Xiamen SET Electronics Co., Ltd. 2024-2026 V1.1

Description

Gas Discharge Tube (GDT) is a single-gap or multi-gap switching overvoltage protection device. Under normal circumstances, the GDT is in a high-impedance state; when suffer a surge, the GDT will change from a high-impedance state to a low-impedance state, and release the surge energy to the ground, reducing the residual voltage of the circuit, thereby protecting the equipment circuit or protect the human body from the hazards of transient overvoltage. GDT is formed by high-temperature sealing of metal electrodes, metallized ceramics, inert gas or other mixed gases.

Features

- Fast Response
- Stable Performance Over Surface Life
- High Current Rating
- Low Capacitance
- High Insulation Resistance
- RoHS & REACH Compliant

Agency Information

Agency Symbol	Standards	The File No. and certification No. obtained by SETsafe | SETfuse
®	UL1449	E322662
c ®	UL1449	E322662

Applications

- Surge Protective Device
- New Energy

Dimensions (mm)

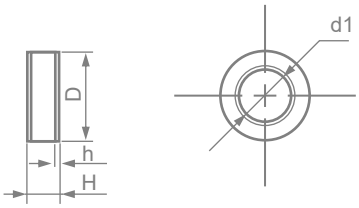

D	d_1	H	h
Φ11.8 ± 0.3	Φ6.8	4.2 ± 0.5	0.8

Notes: May increase each kind of connect mode according to the customer different demand.

Part Numbering System

SP C 601 H - XX

- Lead Type
  A: No Lead, B: Single Lead,
  C: With Lead, 0、1、2.....
  With Different Lead)
- Nominal Discharge Current
  (H: 20 kA)
- D.C. Spark-over Voltage (100 V/s)
  (601: 60 × 10^1)
- Product Structure:
  Φ 11.8 × 4.2 mm
- Series: SP

Reminder:
Part numbering system in the datasheet is only for selecting correct parameter and product features. Before placing order, please contact us for specifications and use the part number and product code in the specifications to place order to ensure the part is correct. Product code is the unique indentification.

All Rights Reserved by Xiamen SET Electronics Co., Ltd. 2024-2026 V1.1

Specifications

Model			SPC351H-XX	SPC601H - XX	SPC801H - XX	SPC102H - XX	Units
Category			II	II	II	II	
Application			N - PE	N - PE	N - PE	N - PE	
Nominal D.C. Spark-over Voltage (100 V/s)			350	600	800	1000	V
D.C. Spark-over Voltage (100 V/s)			280 ~ 420	480 ~ 720	640 ~ 960	800 ~ 1200	V
Impulse Spark-over Voltage @1 kV/μs			< 900	< 1400	< 1600	< 1800	V
GB/T18802.311							
Nominal Impulse Discharge Current @8/20 μs I_n			20	20	20	20	kA
Maximum Impulse Discharge Current @8/20 μs I_{max}			40	40	40	40	kA
Class Ⅰ / Ⅱ (Comply with IEC61643-11)							
Max Continuous Operating Voltage U_c 50/60 Hz			110	255	255	320	Vrms
Follow Current Cut-off Ability AC 50/60 Hz I_f			100	100	100	100	Arms
Nominal Discharge Current @8/20 μs I_n			20	20	20	20	kA
Maximum Discharge Current @8/20 μs I_{max}			40	40	40	40	kA
Insulation Resistance (100 VDC)			> 1000	> 1000	> 1000	> 1000	MΩ
Capacitance at 100 kHz			< 5	< 5	< 5	< 5	pF
Agency Approvals	UL1449		○	●	○	●	
	UL1449		○	●	○	●	
	TUV		○	○	○	○	

Note:

1. The above parameters based on ITU-T K12 & IEC61643.311、IEC61643.11 standards.
2. Connect mode according to the customer different demand.
3. "●" means GDT has gained the certification, "○" means GDT is no certification.
4. Operating Temperature -40 °C ~ +125 °C .

All Rights Reserved by Xiamen SET Electronics Co., Ltd. 2024-2026 V1.1

Packaging Information

PE Box Package

Item	PE Box	Inner Box	Carton
Dimensions (mm)	225 × 205 × 16	230 × 210 × 98	440 × 250 × 250
Quantity (PCS)	192	960	3840
Notes: Packaging dimensions and quantity are for reference only.			

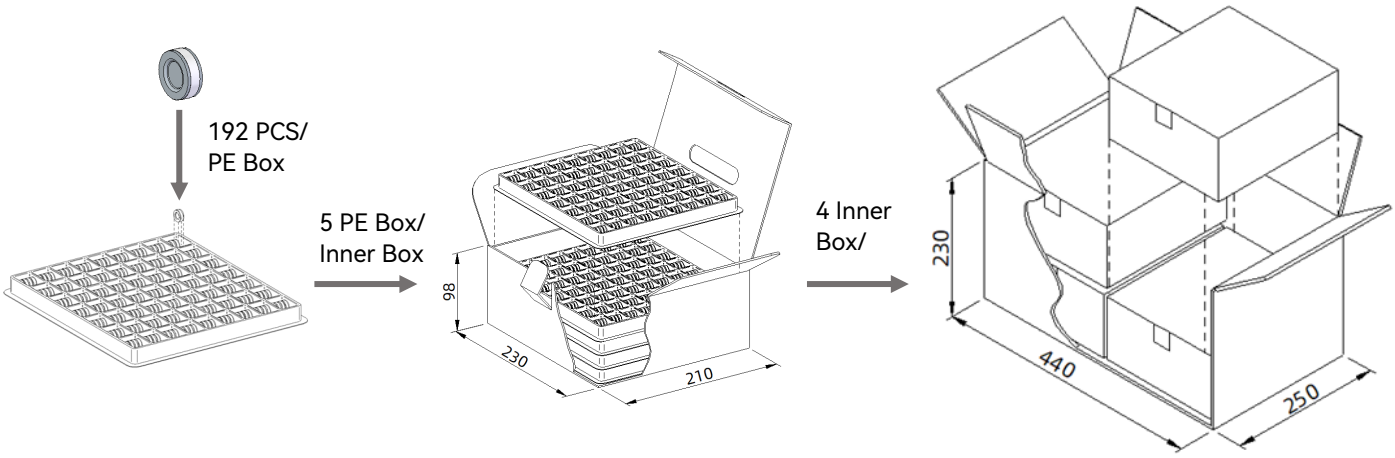

The above picture packaging is only suitable for type A products. For the other appearance and packaging mode and quantity, please refer to the specification.

All Rights Reserved by Xiamen SET Electronics Co., Ltd. 2024-2026 V1.1

GDT
Gas Discharge Tube

SPJ Series

Description

Gas Discharge Tube (GDT) is a single-gap or multi-gap switching overvoltage protection device. Under normal circumstances, the GDT is in a high-impedance state; when suffer a surge, the GDT will change from a high-impedance state to a low-impedance state, and release the surge energy to the ground, reducing the residual voltage of the circuit, thereby protecting the equipment circuit or protect the human body from the hazards of transient overvoltage. GDT is formed by high-temperature sealing of metal electrodes, metallized ceramics, inert gas or other mixed gases.

Features

- Fast Response
- Stable Performance Over Surface Life
- High Current Rating
- Low Capacitance
- High Insulation Resistance
- RoHS & REACH Compliant

Agency Information

Agency Symbol	Standards	The File No. and certification No. obtained by SETsafe | SETfuse
®	UL1449	E322662
c ®	UL1449	E322662

Applications

- Surge Protective Device
- Telecom Equipment
- New Energy

Dimensions (mm)

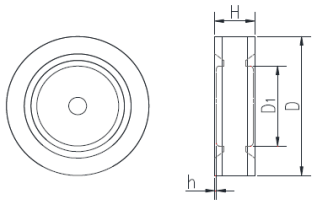

D	D_1	H	h
Φ16.0 ± 0.5	Φ9.0	4.5 ± 0.6	0.2

Notes: May increase each kind of connect mode according to the customer different demand.

Part Numbering System

SP J 601 H - XX

- Lead Type
  A: No Lead, B: Single Lead,
  C: With Lead, 0、1、2.....
  With Different Lead)
- Nominal Discharge Current
  (H: 20 kA, D: 40 kA)
- D.C. Spark-over Voltage (100 V/s)
  (601: 60×10^1)
- Product Structure:
  Φ 16.0 × 4.5 mm
- Series: SP

Reminder:
Part numbering system in the datasheet is only for selecting correct parameter and product features. Before placing order, please contact us for specifications and use the part number and product code in the specifications to place order to ensure the part is correct. Product code is the unique indentification.

All Rights Reserved by Xiamen SET Electronics Co., Ltd. 2024-2026 V1.1

Specifications

Model			SPJ351D-XX	SPJ601D-XX	SPJ801D-XX	SPJ102H-XX	SPJ152H-XX	Units
Category			II	I & II	I & II	I & II	II	
Application			N - PE	N - PE	N - PE	N - PE	N - PE	
Nominal D.C. Spark-over Voltage (100 V/s)			350	600	800	1000	1500	V
D.C. Spark-over Voltage (100 V/s)			280 ~ 420	480 ~ 720	640 ~ 960	800 ~ 1000	1200 ~ 1800	V
Impulse Spark-over Voltage @1 kV/μs			< 900	< 1400	< 1600	< 2000	< 2800	V
GB/T18802.311								
Nominal Impulse Discharge Current @8/20 μs I_n			40	40	40	20	20	kA
Maximum Impulse Discharge Current @8/20 μs I_{max}			60	60	60	40	40	kA
Class I / II (Comply with IEC61643-11)								
Max Continuous Operating Voltage U_c 50/60 Hz			110	255	275	275	320	Vrms
Follow Current Cut-off Ability AC 50/60 Hz I_f			100	100	100	100	100	Arms
Nominal Discharge Current @8/20 μs I_n			20	20	20	20	20	kA
Maximum Discharge Current @8/20 μs I_{max}			40	40	40	40	40	kA
Impulse Discharge Current @10/350 μs			8	8	8	6	6	kA
Insulation Resistance (100 VDC)			> 1000	> 1000	> 1000	> 1000	> 1000	MΩ
Capacitance at 100 kHz			< 7	< 7	< 7	< 7	< 7	pF
Agency Approvals	UL1449		○	●	●	○	●	
	UL1449		○	●	●	○	●	
	TUV		○	○	○	○	○	

Note:

1. The above parameters based on ITU-T K12 & IEC61643.311、IEC61643.11 standards.
2. Connect mode according to the customer different demand.
3. "●" means GDT has gained the certification, "○" means GDT is no certification.
4. Operating Temperature -40 °C ~ +125 °C .

All Rights Reserved by Xiamen SET Electronics Co., Ltd. 2024-2026 V1.1

Packaging Information

PE Box Package

Item	PE Box	Inner Box	Carton
Dimensions (mm)	225 × 205 × 16	230 × 210 × 98	440 × 250 × 250
Quantity (PCS)	192	960	3840
Notes: Packaging dimensions and quantity are for reference only.			

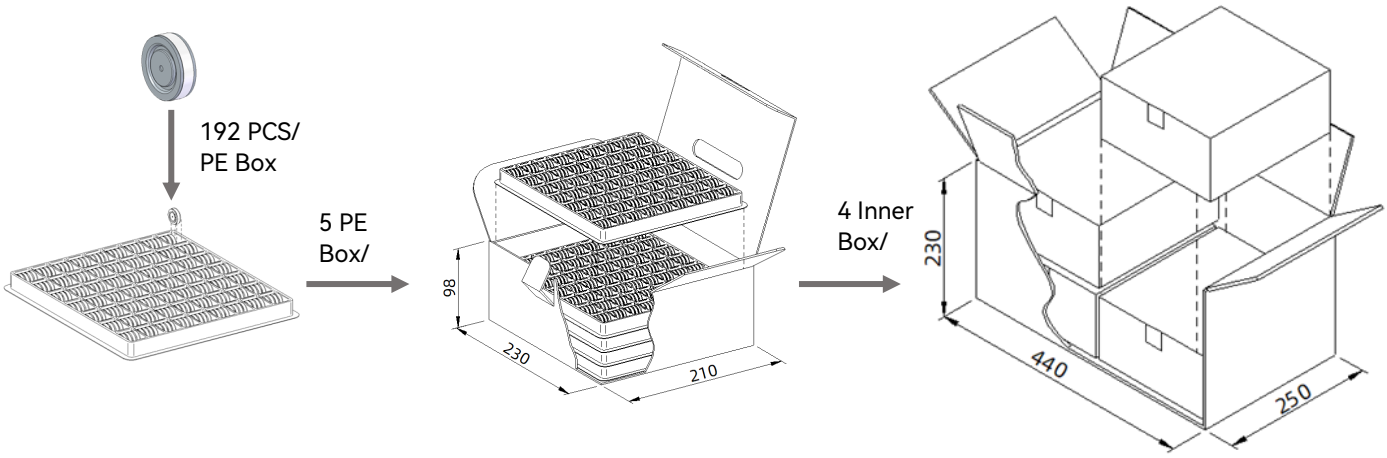

The above picture packaging is only suitable for type A products. For the other appearance and packaging mode and quantity, please refer to the specification.

All Rights Reserved by Xiamen SET Electronics Co., Ltd. 2024-2026 V1.1

GDT
Gas Discharge Tube

SPI Series

Description

Gas Discharge Tube (GDT) is a single-gap or multi-gap switching overvoltage protection device. Under normal circumstances, the GDT is in a high-impedance state; when suffer a surge, the GDT will change from a high-impedance state to a low-impedance state, and release the surge energy to the ground, reducing the residual voltage of the circuit, thereby protecting the equipment circuit or protect the human body from the hazards of transient overvoltage. GDT is formed by high-temperature sealing of metal electrodes, metallized ceramics, inert gas or other mixed gases.

Features

- Fast Response
- Stable Performance Over Surface Life
- High Current Rating
- Low Capacitance
- High Insulation Resistance
- RoHS & REACH Compliant

Agency Information

Agency Symbol	Standards	The File No. and certification No. obtained by SETsafe | SETfuse
	UL1449	E322662
c	UL1449	E322662

Applications

- Surge Protective Device
- Telecom Equipment
- New Energy

Dimensions (mm)

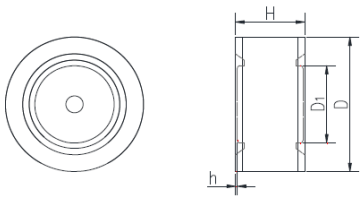

D	D_1	H	h
Φ16.0 ± 0.5	Φ9.0	8.0 ± 0.5	0.2

Notes: May increase each kind of connect mode according to the customer different demand.

Part Numbering System

SP I 601 D - XX

- Lead Type
  A: No Lead, B: Single Lead,
  C: With Lead, 0、1、2.....
  With Different Lead)
- Nominal Discharge Current
  (H: 20 kA, D: 40 kA)
- D.C. Spark-over Voltage (100 V/s)
  (601: 60 × 10^1)
- Product Structure:
  Φ 16.0 × 8.0 mm
- Series: SP

Reminder:
Part numbering system in the datasheet is only for selecting correct parameter and product features. Before placing order, please contact us for specifications and use the part number and product code in the specifications to place order to ensure the part is correct. Product code is the unique indentification.

All Rights Reserved by Xiamen SET Electronics Co., Ltd. 2024-2026 V1.1

Specifications

Model			SPI351D - XX	SPI601D - XX	SPI801D - XX	SPI152H - XX	SPI252H - XX	Units
Category			II	I&II	I&II	II	II	
Application			N - PE	N - PE	N - PE	N - PE	N - PE	
Nominal D.C. Spark-over Voltage (100 V/s)			350	600	800	1500	2500	V
D.C. Spark-over Voltage (100 V/s)			280 ~ 420	480 ~ 720	640 ~ 960	1200 ~ 1800	2000 ~ 3000	V
Impulse Spark-over Voltage @1 kV/μs			< 900	< 1200	< 1600	< 2800	< 4500	V
GB/T18802.311								
Nominal Impulse Discharge Current @8/20 μs I_n			40	40	40	20	20	kA
Maximum Impulse Discharge Current @8/20 μs I_{max}			80	80	80	40	40	kA
ClassI/II (Comply with IEC61643-11)								
Max Continuous Operating Voltage *Uc* 50/60 Hz			110	255	275	320	440	Vrms
Follow Current Cut-off Ability AC 50/60 Hz I_f			100	100	100	100	100	Arms
Nominal Discharge Current @8/20 μs I_n			40	40	40	20	20	kA
Maximum Discharge Current @8/20 μs I_{max}			80	80	80	40	40	kA
Impulse Discharge Current @10/350 μs			15	15	15	8	6	kA
Insulation Resistance (100 VDC)			> 1000	> 1000	> 1000	> 1000	> 1000	MΩ
Capacitance at 100 kHz			< 8	< 8	< 8	< 8	< 8	pF
Agency Approvals	UL1449		○	●	●	○	●	
	UL1449		○	●	●	○	●	
	TUV		○	○	○	○	○	

Note:

1. The above parameters based on ITU-T K12 & IEC61643.311、IEC61643.11 standards.
2. Connect mode according to the customer different demand.
3. "●" means GDT has gained the certification, "○" means GDT is no certification.
4. Operating Temperature -40 °C ~ +125 °C .

All Rights Reserved by Xiamen SET Electronics Co., Ltd. 2024-2026 V1.1

Packaging Information

PE Box Package

Item	PE Box	Inner Box	Carton
Dimensions (mm)	225 × 205 × 16	230 × 210 × 98	440 × 250 × 250
Quantity (PCS)	96	480	1920
Notes: Packaging dimensions and quantity are for reference only.			

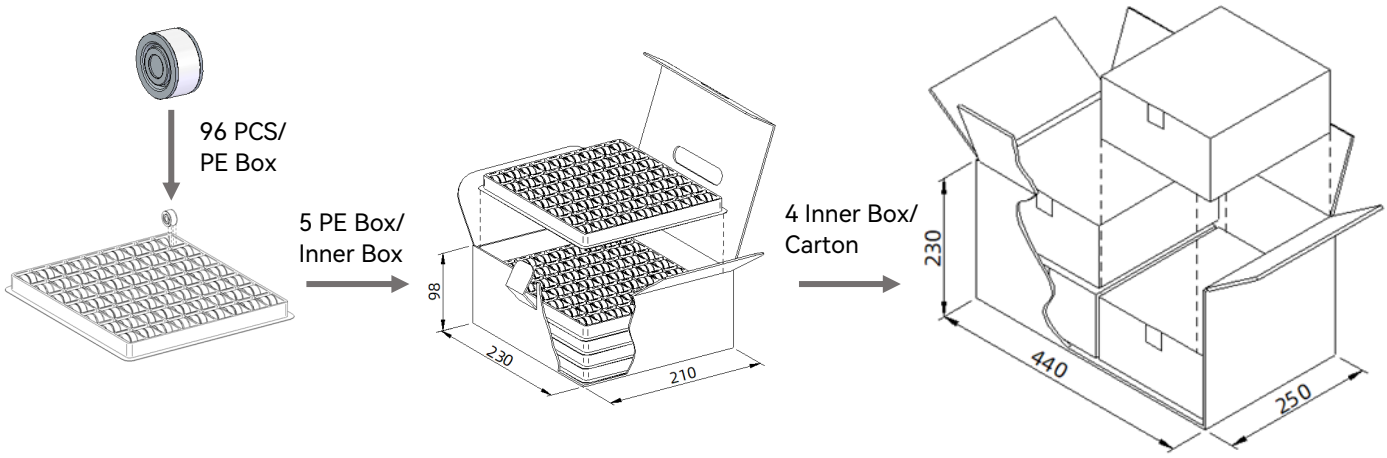

The above picture packaging is only suitable for type A products. For the other appearance and packaging mode and quantity, please refer to the specification.

All Rights Reserved by Xiamen SET Electronics Co., Ltd. 2024-2026 V1.1

Description

Gas Discharge Tube (GDT) is a single-gap or multi-gap switching overvoltage protection device. Under normal circumstances, the GDT is in a high-impedance state; when suffer a surge, the GDT will change from a high-impedance state to a low-impedance state, and release the surge energy to the ground, reducing the residual voltage of the circuit, thereby protecting the equipment circuit or protect the human body from the hazards of transient overvoltage. GDT is formed by high-temperature sealing of metal electrodes, metallized ceramics, inert gas or other mixed gases.

Features

- Fast Response
- Stable Performance Over Surface Life
- High Current Rating
- Low Capacitance
- High Insulation Resistance
- RoHS & REACH Compliant

Agency Information

Agency Symbol	Standards	The File No. and certification No. obtained by SETsafe | SETfuse
	UL1449	E322662
c	UL1449	E322662

Applications

- Surge Protective Device
- New Energy

Dimensions (mm)

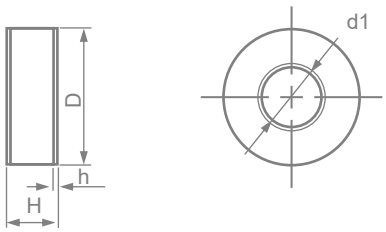

D	d_1	H	h
Φ18.0 ± 0.5	Φ7.9	6.7 ± 0.5	0.5

Notes: May increase each kind of connect mode according to the customer different demand.

Part Numbering System

SP H 601 D - XX

- Lead Type
  A: No Lead, B: Single Lead,
  C: With Lead, 0、1、2.....
  With Different Lead)
- Nominal Discharge Current
  (D: 40 kA)
- D.C. Spark-over Voltage (100 V/s)
  (601: 60 × 10^1)
- Product Structure:
  Φ 18.0 × 6.7 mm
- Series: SP

Reminder:
Part numbering system in the datasheet is only for selecting correct parameter and product features. Before placing order, please contact us for specifications and use the part number and product code in the specifications to place order to ensure the part is correct. Product code is the unique indentification.

All Rights Reserved by Xiamen SET Electronics Co., Ltd. 2024-2026 V1.1

Specifications

Model			SPH351D - XX	SPH601D - XX	SPH801D - XX	Units
Category			II	I & II	I & II	
Application			N - PE	N - PE	N - PE	
Nominal D.C. Spark-over Voltage (100 V/s)			350	600	800	V
D.C. Spark-over Voltage (100 V/s)			280 ~ 420	480 ~ 720	640 ~ 960	V
Impulse Spark-over Voltage @1 kV/μs			< 900	< 1200	< 1600	V
GB/T18802.311						
Nominal Impulse Discharge Current @8/20 μs I_n			40	40	40	kA
Maximum Impulse Discharge Current @8/20 μs I_{max}			80	80	80	kA
Class I / II (Comply with IEC61643-11)						
Max Continuous Operating Voltage U_c 50/60 Hz			110	255	255	Vrms
Follow Current Cut-off Ability AC 50/60 Hz I_f			100	100	100	Arms
Nominal Discharge Current @8/20 μs I_n			30	30	30	kA
Maximum Discharge Current @8/20 μs I_{max}			60	60	60	kA
Impulse Discharge Current @10/350 μs			12.5	12.5	12.5	kA
Insulation Resistance (100 VDC)			> 1000	> 1000	> 1000	MΩ
Capacitance at 100 kHz			< 5	< 5	< 5	pF
Agency Approvals	UL1449		○	●	○	
	UL1449		○	○	○	
	TUV		○	○	○	

Note:

1. The above parameters based on ITU-T K12 & IEC61643.311、IEC61643.11 standards.
2. Connect mode according to the customer different demand.
3. "●" means GDT has gained the certification, "○" means GDT is no certification.
4. Operating Temperature -40 °C ~ +125 °C .

All Rights Reserved by Xiamen SET Electronics Co., Ltd. 2024-2026 V1.1

Packaging Information

PE Box Package

Item	PE Box	Inner Box	Carton
Dimensions (mm)	225 × 205 × 16	230 × 210 × 98	440 × 250 × 250
Quantity (PCS)	48	240	1960
Notes: Packaging dimensions and quantity are for reference only.			

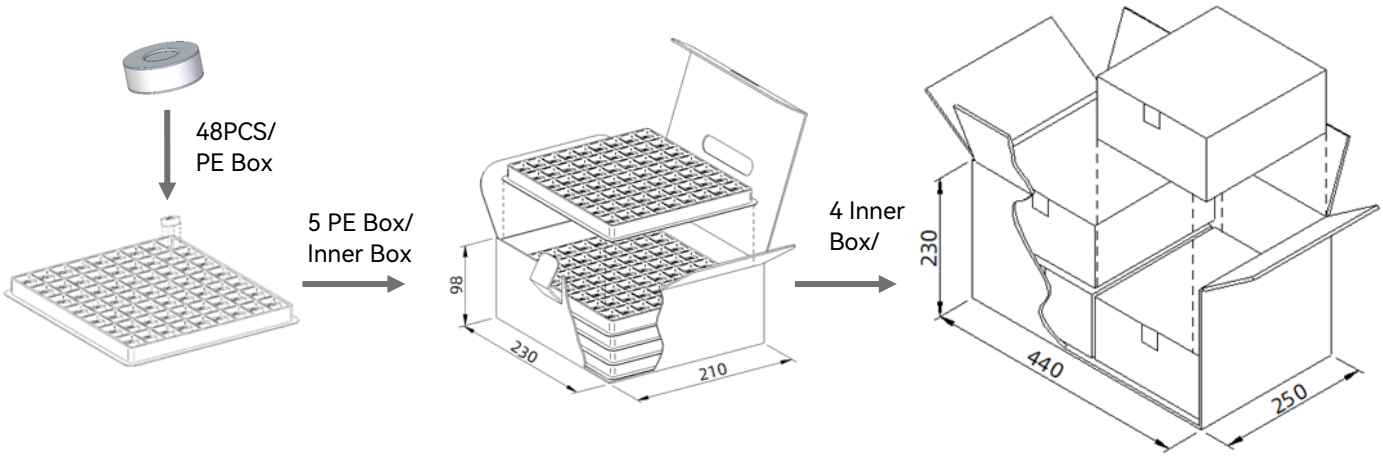

The above picture packaging is only suitable for type A products. For the other appearance and packaging mode and quantity, please refer to the specification.

All Rights Reserved by Xiamen SET Electronics Co., Ltd. 2024-2026 V1.1

Description

Gas Discharge Tube (GDT) is a single-gap or multi-gap switching overvoltage protection device. Under normal circumstances, the GDT is in a high-impedance state; when suffer a surge, the GDT will change from a high-impedance state to a low-impedance state, and release the surge energy to the ground, reducing the residual voltage of the circuit, thereby protecting the equipment circuit or protect the human body from the hazards of transient overvoltage. GDT is formed by high-temperature sealing of metal electrodes, metallized ceramics, inert gas or other mixed gases.

Features

- Fast Response
- Stable Performance Over Surface Life
- High Current Rating
- Low Capacitance
- High Insulation Resistance
- RoHS & REACH Compliant

Agency Information

Agency Symbol	Standards	The File No. and certification No. obtained by SETsafe | SETfuse
®	UL1449	E322662
c ®	UL1449	E322662

Applications

- Surge Protective Device
- Telecom Equipment
- New Energy

Dimensions (mm)

D	d	H	h
Φ15.0 ± 0.5	Φ10.5	3.0 ± 0.5	0.5

Notes: May increase each kind of connect mode according to the customer different demand.

Part Numbering System

SP K 601 D - XX

- Lead Type
  A: No Lead, B: Single Lead,
  C: With Lead, 0、1、2.....
  With Different Lead)
- Nominal Discharge Current
  (D: 40 kA)
- D.C. Spark-over Voltage (100 V/s)
  (601: 60 × 10^1)
- Product Structure:
  Φ 15.0 × 3.0 mm
- Series: SP

Reminder:
Part numbering system in the datasheet is only for selecting correct parameter and product features. Before placing order, please contact us for specifications and use the part number and product code in the specifications to place order to ensure the part is correct. Product code is the unique indentification.

All Rights Reserved by Xiamen SET Electronics Co., Ltd. 2024-2026 V1.1

Specifications

Model			SPK091D - XX	SPK601D - XX	SPK102D - XX	Units
Category			II	II	II	
Application			N - PE	N - PE	N - PE	
Nominal D.C. Spark-over Voltage (100 V/s)			90	600	1000	V
D.C. Spark-over Voltage (100 V/s)			72 ~ 108	480 ~ 720	800 ~ 1200	V
Impulse Spark-over Voltage @1 kV/μs			< 700	< 1200	< 2000	V
GB/T18802.311						
Nominal Impulse Discharge Current @8/20 μs I_n			40	40	20	kA
Maximum Impulse Discharge Current @8/20 μs I_{max}			60	60	40	kA
Class II (Comply with IEC61643-11)						
Nominal Discharge Current @8/20 μs I_n			20	20	20	kA
Maximum Discharge Current @8/20 μs I_{max}			40	40	40	kA
Insulation Resistance (100 VDC)			> 1000	> 1000	> 1000	MΩ
Capacitance at 100 kHz			< 7	< 7	< 7	pF
Agency Approvals	UL1449		●	●	○	
	UL1449		●	●	○	
	TUV		○	○	○	

Note:

1. The above parameters based on ITU-T K12 & IEC61643.311、IEC61643.11 standards.
2. Connect mode according to the customer different demand.
3. “●” means GDT has gained the certification, “○” means GDT is no certification.
4. Operating Temperature -40 °C ~ +125 °C .

All Rights Reserved by Xiamen SET Electronics Co., Ltd. 2024-2026 V1.1

Packaging Information

PE Box Package

Item	PE Box	Inner Box	Carton
Dimensions (mm)	225 × 205 × 16	230 × 210 × 98	440 × 250 × 250
Quantity (PCS)	288	1440	5660
Notes: Packaging dimensions and quantity are for reference only.			

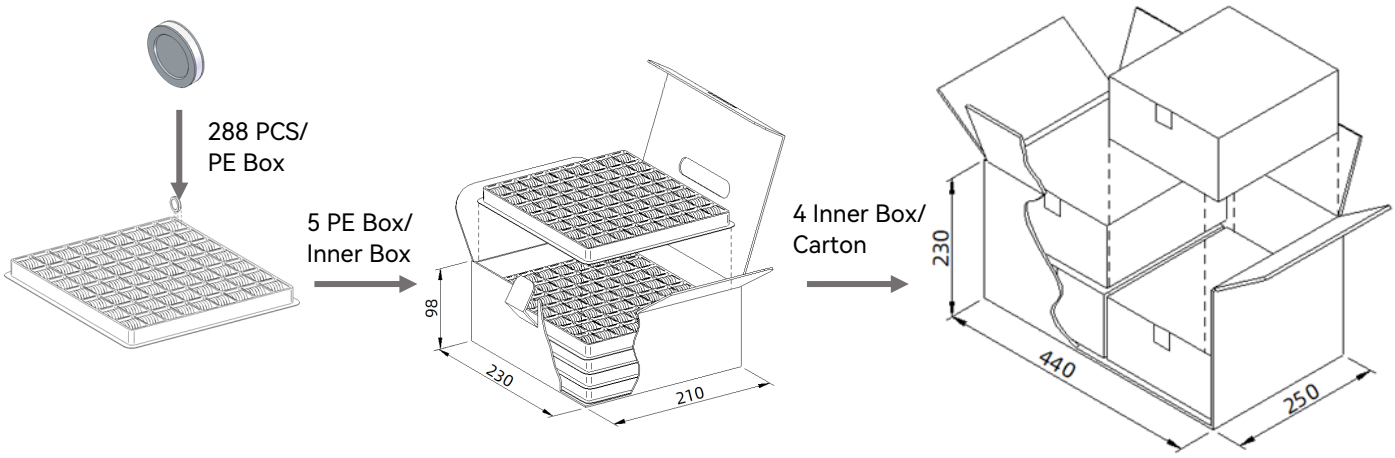

The above picture packaging is only suitable for type A products. For the other appearance and packaging mode and quantity, please refer to the specification.

All Rights Reserved by Xiamen SET Electronics Co., Ltd. 2024-2026 V1.1

Description

Gas Discharge Tube (GDT) is a single-gap or multi-gap switching overvoltage protection device. Under normal circumstances, the GDT is in a high-impedance state; when suffer a surge, the GDT will change from a high-impedance state to a low-impedance state, and release the surge energy to the ground, reducing the residual voltage of the circuit, thereby protecting the equipment circuit or protect the human body from the hazards of transient overvoltage. GDT is formed by high-temperature sealing of metal electrodes, metallized ceramics, inert gas or other mixed gases.

Features

- Fast Response
- Stable Performance Over Surface Life
- High Current Rating
- Low Capacitance
- High Insulation Resistance
- RoHS & REACH Compliant

Agency Information

Agency Symbol	Standards	The File No. and certification No. obtained by SETsafe | SETfuse
	UL1449	E322662
c	UL1449	E322662

Applications

- Surge Protective Device
- New Energy

Part Numbering System

SP P 601 P - XX

- Lead Type
  A: No Lead, B: Single Lead,
  C: With Lead, 0、1、2.....
  With Different Lead)
- Nominal Discharge Current
  (P: 100 kA)
- D.C. Spark-over Voltage (100 V/s)
  (601: 60 × 10^1)
- Product Structure:
  Φ 30.0 × 12.0 mm
- Series: SP

Dimensions (mm)

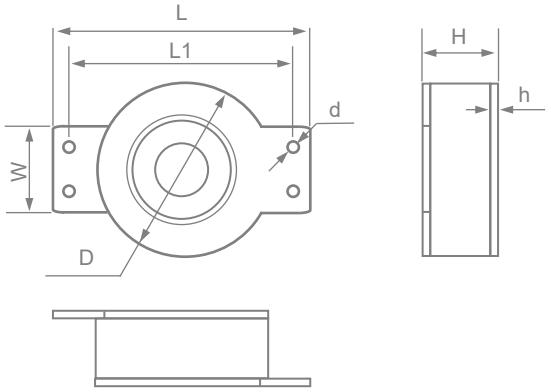

D	d	H	h
Φ30.0± 0.5	Φ2.1	12.0 ± 0.5	1.0
W	L	L1	
15.0 ± 0.3	43.0 + 2 / - 0.5	36.6	

Notes: May increase each kind of connect mode according to the customer different demand.

Reminder:
Part numbering system in the datasheet is only for selecting correct parameter and product features. Before placing order, please contact us for specifications and use the part number and product code in the specifications to place order to ensure the part is correct. Product code is the unique indentification.

All Rights Reserved by Xiamen SET Electronics Co., Ltd. 2024-2026 V1.1

Specifications

Model			SPP601P - XX	SPP801P - XX	Units
Category			I & II	I & II	
Application			N - PE	N - PE	
Nominal D.C. Spark-over Voltage (100 V/s)			600	800	V
D.C. Spark-over Voltage (100 V/s)			480 ~ 720	640 ~ 960	V
Impulse Spark-over Voltage @1 kV/μs			< 1200	< 1600	V
GB/T18802.311					
Nominal Impulse Discharge Current @8/20 μs I_n			100	100	kA
Maximum Impulse Discharge Current @8/20 μs I_{max}			120	120	kA
Class I / II (Comply with IEC61643-11)					
Max Continuous Operating Voltage U_c 50/60 Hz			255	255	Vrms
Follow Current Cut-off Ability AC 50/60 Hz I_f			100	100	Arms
Nominal Discharge Current @8/20 μs I_n			50	50	kA
Maximum Discharge Current @8/20 μs I_{max}			100	100	kA
Impulse Discharge Current @10/350 μs			25	25	kA
Insulation Resistance (100 VDC)			> 1000	> 1000	MΩ
Capacitance at 100 kHz			< 10	< 10	pF
Agency Approvals	UL1449		●	○	
	UL1449		●	○	
	TUV		○	○	

Note:

1. The above parameters based on ITU-T K12 & IEC61643.311、IEC61643.11 standards.
2. Connect mode according to the customer different demand.
3. "●" means GDT has gained the certification, "○" means GDT is no certification.
4. Operating Temperature -40 °C ~ +125 °C .

All Rights Reserved by Xiamen SET Electronics Co., Ltd. 2024-2026 V1.1

Packaging Information

EPE Box Package

Item	EPE Box	Inner Box	Carton
Dimensions (mm)	225 × 205 × 20	230 × 210 × 98	440 × 250 × 230
Quantity (PCS)	16	48	152
Notes: Packaging dimensions and quantity are for reference only.			

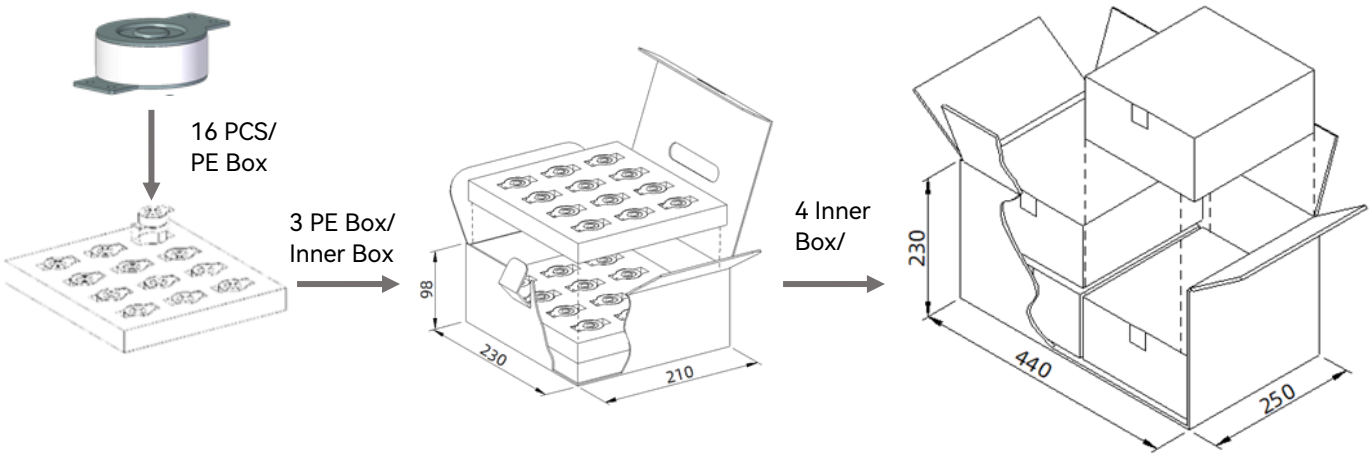

The above picture packaging is only suitable for type A products. For the other appearance and packaging mode and quantity, please refer to the specification.

All Rights Reserved by Xiamen SET Electronics Co., Ltd. 2024-2026 V1.1

Description

Gas Discharge Tube (GDT) is a single-gap or multi-gap switching overvoltage protection device. Under normal circumstances, the GDT is in a high-impedance state; when suffer a surge, the GDT will change from a high-impedance state to a low-impedance state, and release the surge energy to the ground, reducing the residual voltage of the circuit, thereby protecting the equipment circuit or protect the human body from the hazards of transient overvoltage. GDT is formed by high-temperature sealing of metal electrodes, metallized ceramics, inert gas or other mixed gases.

Features

- Fast Response
- Stable Performance Over Surface Life
- High Current Rating
- Low Capacitance
- High Insulation Resistance
- RoHS & REACH Compliant

Agency Information

Agency Symbol	Standards	The File No. and certification No. obtained by SETsafe | SETfuse
	UL1449	E322662
c	UL1449	E322662

Applications

- Surge Protective Device
- New Energy

Part Numbering System

SP R 601 D - XX

- XX: Lead Type
  A: No Lead, B: Single Lead,
  C: With Lead, 0、1、2.....
  With Different Lead)
- D: Nominal Discharge Current
  (H: 20 kA, D: 40 kA)
- 601: D.C. Spark-over Voltage (100 V/s)
  (601: 60×10^1)
- R: Product Structure:
  Φ 20.0 × 6.0 mm
- SP: Series: SP

Dimensions (mm)

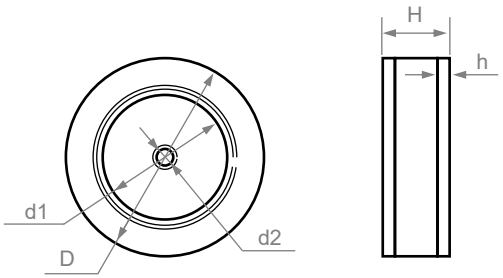

D	d1	d2	H	h
Φ20.0 ± 0.5	Φ11.5	Φ1.7	6.0 ± 0.5	0.9

Notes: May increase each kind of connect mode according to the customer different demand.

Reminder:
Part numbering system in the datasheet is only for selecting correct parameter and product features. Before placing order, please contact us for specifications and use the part number and product code in the specifications to place order to ensure the part is correct. Product code is the unique indentification.

All Rights Reserved by Xiamen SET Electronics Co., Ltd. 2024-2026 V1.1

Specifications

Model			SPR601D - XX	SPR801D-XX	SPR202H-XX	SPR302H-XX	Units
Category			I & II	I & II	II	II	
Application			N - PE	N - PE	N - PE	N - PE	
Nominal D.C. Spark-over Voltage (100 V/s)			600	800	2000	3000	V
D.C. Spark-over Voltage (100 V/s)			480 ~ 720	640 ~ 960	1600 ~ 2400	2400 ~ 3600	V
Impulse Spark-over Voltage @1 kV/μs			< 1200	< 1600	< 3500	< 4500	V
GB/T18802.311							
Nominal Impulse Discharge Current @8/20 μs I_n			40	40	20	20	kA
Maximum Impulse Discharge Current @8/20 μs I_{max}			80	80	40	40	kA
Class I / II (Comply with IEC61643-11)							
Max Continuous Operating Voltage U_c 50/60 Hz			255	255	-	-	Vrms
Follow Current Cut-off Ability AC 50/60 Hz I_f			100	100	-	-	Arms
Nominal Discharge Current @8/20 μs I_n			40	40	20	20	kA
Maximum Discharge Current @8/20 μs I_{max}			80	80	40	40	kA
Impulse Discharge Current @10/350 μs			15	15	-	-	kA
Insulation Resistance (100 VDC)			> 1000	> 1000	> 1000	> 1000	MΩ
Capacitance at 100 kHz			< 10	< 10	< 7	< 7	pF
Agency Approvals	UL1449		●	○	○	○	
	UL1449		●	○	○	○	
	TUV		○	○	○	○	

Note:

1. The above parameters based on ITU-T K12 & IEC61643.311、IEC61643.11 standards.
2. Connect mode according to the customer different demand.
3. "●" means GDT has gained the certification, "○" means GDT is no certification.
4. Operating Temperature -40 °C ~ +125 °C .

All Rights Reserved by Xiamen SET Electronics Co., Ltd. 2024-2026 V1.1

Packaging Information

PE Box Package

Item	PE Box	Inner Box	Carton
Dimensions (mm)	225 × 205 × 16	230 × 210 × 98	440 × 250 × 250
Quantity (PCS)	48	240	960
Notes: Packaging dimensions and quantity are for reference only.			

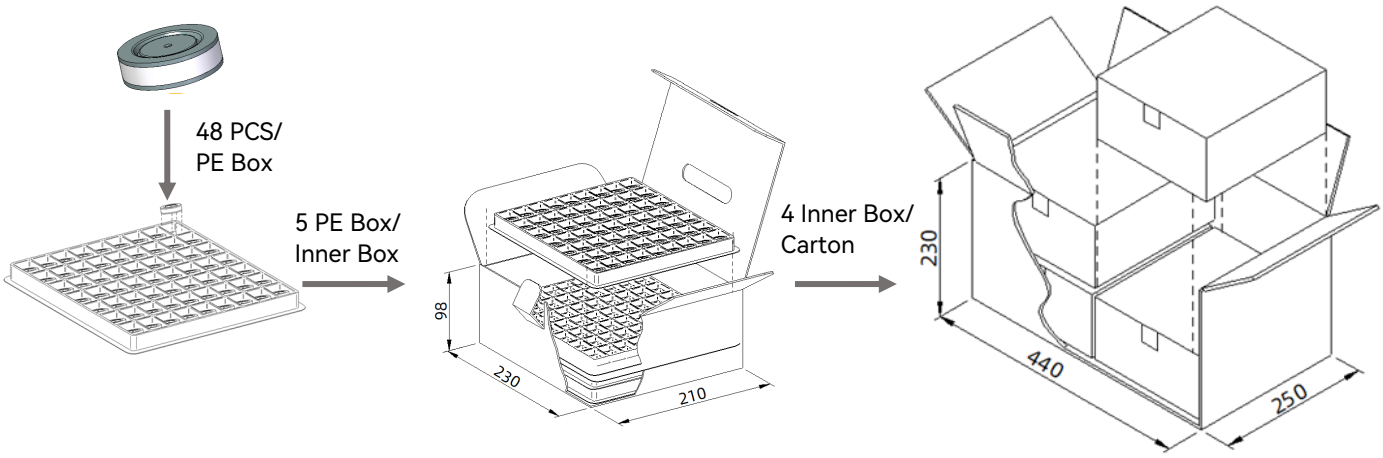

The above picture packaging is only suitable for type A products. For the other appearance and packaging mode and quantity, please refer to the specification.

All Rights Reserved by Xiamen SET Electronics Co., Ltd. 2024-2026 V1.1

Description

Gas Discharge Tube (GDT) is a single-gap or multi-gap switching overvoltage protection device. Under normal circumstances, the GDT is in a high-impedance state; when suffer a surge, the GDT will change from a high-impedance state to a low-impedance state, and release the surge energy to the ground, reducing the residual voltage of the circuit, thereby protecting the equipment circuit or protect the human body from the hazards of transient overvoltage. GDT is formed by high-temperature sealing of metal electrodes, metallized ceramics, inert gas or other mixed gases.

Features

- Fast Response
- Stable Performance Over Surface Life
- High Current Rating
- Low Capacitance
- High Insulation Resistance
- RoHS & REACH Compliant

Agency Information

Agency Symbol	Standards	The File No. and certification No. obtained by SETsafe | SETfuse
®	UL1449	E322662
c ®	UL1449	E322662

Applications

- Surge Protective Device
- New Energy

Dimensions (mm)

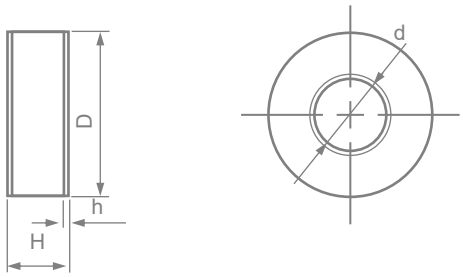

D	d	H	h
Φ24.0 ± 0.5	Φ14.2	10.0 ± 0.5	0.8

Notes: May increase each kind of connect mode according to the customer different demand.

Part Numbering System

SP S 601 G - XX

- Lead Type
  A: No Lead, B: Single Lead,
  C: With Lead, 0、1、2.....
  With Different Lead)
- Nominal Discharge Current
  (G: 80 kA)
- D.C. Spark-over Voltage (100 V/s)
  (601: 60×10^1)
- Product Structure:
  Φ 24.0 × 10.0 mm
- Series: SP

Reminder:
Part numbering system in the datasheet is only for selecting correct parameter and product features. Before placing order, please contact us for specifications and use the part number and product code in the specifications to place order to ensure the part is correct. Product code is the unique indentification.

All Rights Reserved by Xiamen SET Electronics Co., Ltd. 2024-2026 V1.1

Specifications

Model			SPS601G - XX	SPS801G - XX	Units
Category			I & II	I & II	
Application			N - PE	N - PE	
Nominal D.C. Spark-over Voltage (100 V/s)			600	800	V
D.C. Spark-over Voltage (100 V/s)			480 ~ 720	640 ~ 960	V
Impulse Spark-over Voltage @1 kV/μs			< 1200	< 1600	V
GB/T18802.311					
Nominal Impulse Discharge Current @8/20 μs I_n			80	80	kA
Maximum Impulse Discharge Current @8/20 μs I_{max}			100	100	kA
Class I / II (Comply with IEC61643-11)					
Max Continuous Operating Voltage U_c 50/60 Hz			255	255	Vrms
Follow Current Cut-off Ability AC 50/60 Hz I_f			100	100	Arms
Nominal Discharge Current @8/20 μs I_n			50	50	kA
Maximum Discharge Current @8/20 μs I_{max}			100	100	kA
Impulse Discharge Current @10/350 μs			25	25	kA
Insulation Resistance (100 VDC)			> 1000	> 1000	MΩ
Capacitance at 100 kHz			< 10	< 10	pF
Agency Approvals	UL1449		●	○	
	UL1449		●	○	
	TUV		○	○	

Note:

1. The above parameters based on ITU-T K12 & IEC61643.311、IEC61643.11 standards.
2. Connect mode according to the customer different demand.
3. "●" means GDT has gained the certification, "○" means GDT is no certification.
4. Operating Temperature -40 °C ~ +125 °C .

All Rights Reserved by Xiamen SET Electronics Co., Ltd. 2024-2026 V1.1

Packaging Information

EPE Box Package

Item	EPE Box	Inner Box	Carton
Dimensions (mm)	225 × 205 × 20	230 × 210 × 98	440 × 250 × 230
Quantity (PCS)	15	60	240
Notes: Packaging dimensions and quantity are for reference only.			

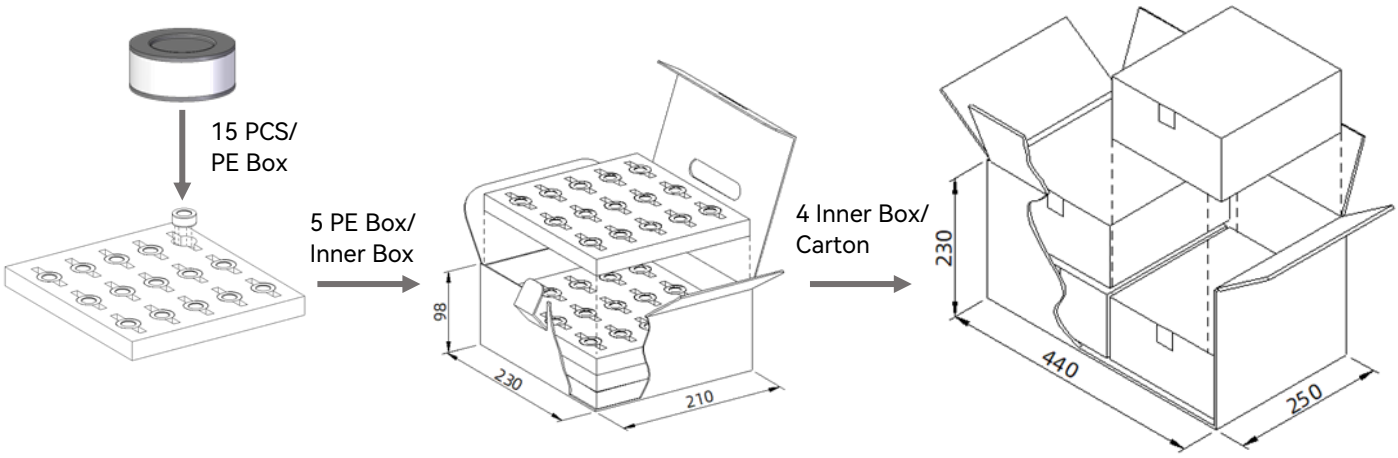

The above picture packaging is only suitable for type A products. For the other appearance and packaging mode and quantity, please refer to the specification.

All Rights Reserved by Xiamen SET Electronics Co., Ltd. 2024-2026 V1.1

Description

Gas Discharge Tube (GDT) is a single-gap or multi-gap switching overvoltage protection device. Under normal circumstances, the GDT is in a high-impedance state; when suffer a surge, the GDT will change from a high-impedance state to a low-impedance state, and release the surge energy to the ground, reducing the residual voltage of the circuit, thereby protecting the equipment circuit or protect the human body from the hazards of transient overvoltage. GDT is formed by high-temperature sealing of metal electrodes, metallized ceramics, inert gas or other mixed gases.

Features

- Fast Response
- Stable Performance Over Surface Life
- High Current Rating
- Low Capacitance
- High Insulation Resistance
- RoHS & REACH Compliant

Agency Information

Agency Symbol	Standards	The File No. and certification No. obtained by SETsafe | SETfuse
	UL1449	On-going
c	UL1449	On-going

Applications

- Surge Protective Device
- New Energy

Dimensions (mm)

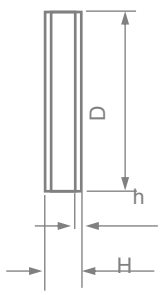

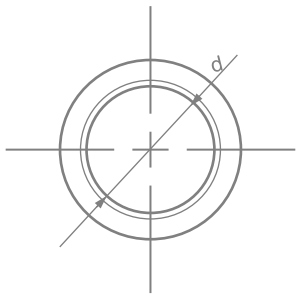

D	d	H	h
Φ20.0 ± 0.3	Φ10.5	4.0 ± 0.5	0.5

Notes: May increase each kind of connect mode according to the customer different demand.

Part Numbering System

SP V 601 D - XX

- XX: Lead Type
  A: No Lead, B: Single Lead,
  C: With Lead, 0、1、2.....
  With Different Lead)
- D: Nominal Discharge Current
  (D: 40 kA)
- 601: D.C. Spark-over Voltage (100 V/s)
  (801: 80 × 10^1)
- V: Product Structure:
  Φ 20.0 × 4.0 mm
- SP: Series: SP

Reminder:
Part numbering system in the datasheet is only for selecting correct parameter and product features. Before placing order, please contact us for specifications and use the part number and product code in the specifications to place order to ensure the part is correct. Product code is the unique indentification.

All Rights Reserved by Xiamen SET Electronics Co., Ltd. 2024-2026 V1.1

Specifications

Model			SPV351D - XX	SPV601D - XX	SPV801D - XX	Units
Category			II	II	II	
Application			N - PE	N - PE	N - PE	
Nominal D.C. Spark-over Voltage (100 V/s)			350	600	800	V
D.C. Spark-over Voltage (100 V/s)			280 ~ 420	480 ~ 720	800 ~ 1200	V
Impulse Spark-over Voltage @1 kV/μs			< 900	< 1400	< 1600	V
GB/T18802.311						
Nominal Impulse Discharge Current @8/20 μs I_n			40	40	20	kA
Maximum Impulse Discharge Current @8/20 μs I_{max}			80	80	80	kA
Class II (Comply with IEC61643-11)						
Nominal Discharge Current @8/20 μs I_n			40	40	40	kA
Maximum Discharge Current @8/20 μs I_{max}			60	60	60	kA
Insulation Resistance (100 VDC)			> 1000	> 1000	> 1000	MΩ
Capacitance at 100 kHz			< 10	< 10	< 10	pF
Agency Approvals	UL1449		○	○	○	
	UL1449		○	○	○	
	TUV		○	○	○	

Note:

1. The above parameters based on ITU-T K12 & IEC61643.311、IEC61643.11 standards.
2. Connect mode according to the customer different demand.
3. "●" means GDT has gained the certification, "○" means GDT is no certification.
4. Operating Temperature -40 °C ~ +125 °C .

All Rights Reserved by Xiamen SET Electronics Co., Ltd. 2024-2026 V1.1

Packaging Information

PE Box Package

Item	PE Box	Inner Box	Carton
Dimensions (mm)	225 × 205 × 16	230 × 210 × 98	440 × 250 × 250
Quantity (PCS)	48	240	960
Notes: Packaging dimensions and quantity are for reference only.			

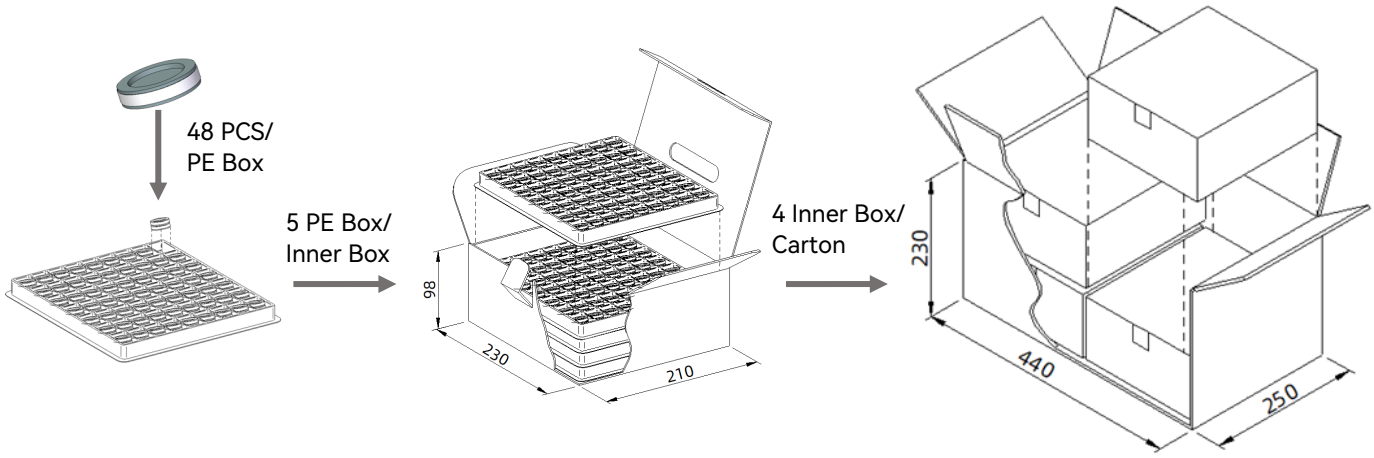

The above picture packaging is only suitable for type A products. For the other appearance and packaging mode and quantity, please refer to the specification.

All Rights Reserved by Xiamen SET Electronics Co., Ltd. 2024-2026 V1.1

Description

Gas Discharge Tube (GDT) is a single-gap or multi-gap switching overvoltage protection device. Under normal circumstances, the GDT is in a high-impedance state; when suffer a surge, the GDT will change from a high-impedance state to a low-impedance state, and release the surge energy to the ground, reducing the residual voltage of the circuit, thereby protecting the equipment circuit or protect the human body from the hazards of transient overvoltage. GDT is formed by high-temperature sealing of metal electrodes, metallized ceramics, inert gas or other mixed gases.

Features

- Fast Response
- Stable Performance Over Surface Life
- High Current Rating
- Low Capacitance
- High Insulation Resistance
- RoHS & REACH Compliant

Agency Information

Agency Symbol	Standards	The File No. and certification No. obtained by SETsafe | SETfuse
	UL1449	On-giong
c	UL1449	On-going

Applications

- Surge Protective Device
- New Energy

Dimensions (mm)

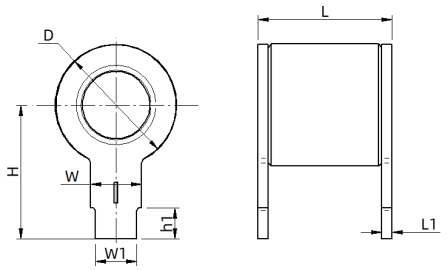

D	L	H	W
Φ11.8 ± 0.5	13.0 ± 0.5	13.0 ± 0.5	5.0 ± 0.2
W1	**h1**	**L1**	
4.0 ± 0.2	3.0 ± 0.2	1.0 ± 0.05	

Notes: May increase each kind of connect mode according to the customer different demand.

Part Numbering System

SP Z 601 D - XX

- XX: Lead Type
  A: No Lead, B: Single Lead,
  C: With Lead, 0、1、2.....
  With Different Lead)
- D: Nominal Discharge Current
  (D: 40 kA)
- 601: D.C. Spark-over Voltage (100 V/s)
  (601: 60 × 10^1)
- Z: Product Structure:
  Φ 11.8 × 13.0 mm
- SP: Series: SP

Reminder:
Part numbering system in the datasheet is only for selecting correct parameter and product features. Before placing order, please contact us for specifications and use the part number and product code in the specifications to place order to ensure the part is correct. Product code is the unique indentification.

All Rights Reserved by Xiamen SET Electronics Co., Ltd. 2024-2026 V1.1

Specifications

Model			SPZ251D-XX	SPZ351D-XX	SPZ601D-XX	SPZ801D-XX	Units
Category			II	II	II	II	
Application			N - PE	N - PE	N - PE	N - PE	
Nominal D.C. Spark-over Voltage (100 V/s)			250	350	600	800	V
D.C. Spark-over Voltage (100 V/s)			200 ~ 300	280 ~ 420	480 ~ 720	640 ~ 960	V
Impulse Spark-over Voltage @1 kV/μs			< 700	< 900	< 1400	< 1600	V
GB/T18802.311							
Nominal Impulse Discharge Current @8/20 μs I_n			40	40	40	40	kA
Maximum Impulse Discharge Current @8/20 μs I_{max}			60	60	60	60	kA
Class Ⅰ / Ⅱ (Comply with IEC61643-11)							
Max Continuous Operating Voltage U_c 50/60 Hz			-	-	255	255	Vrms
Follow Current Cut-off Ability AC 50/60 Hz I_f			-	-	100	100	Arms
Nominal Discharge Current @8/20 μs I_n			30	30	40	40	kA
Maximum Discharge Current @8/20 μs I_{max}			40	40	60	60	kA
Impulse Discharge Current @10/350 μs			8	8	8	8	kA
Insulation Resistance (100 VDC)			> 1000	> 1000	> 1000	> 1000	MΩ
Capacitance at 100 kHz			< 5	< 5	< 5	< 5	pF
Agency Approvals	UL1449		⊙	⊙	⊙	⊙	
	UL1449		⊙	⊙	⊙	⊙	
	TUV		○	○	○	○	

Note:

1. The above parameters based on ITU-T K12 & IEC61643.311、IEC61643.11 standards.
2. Connect mode according to the customer different demand.
3. "⊙" means GDT has planed the certification, "○" means GDT is no certification.
4. Operating Temperature -40 °C ~ +125 °C. Certification in progress

All Rights Reserved by Xiamen SET Electronics Co., Ltd. 2024-2026 V1.1

Packaging Information

PE Box Package

Item	PE Box	Inner Box	Carton
Dimensions (mm)	225 × 205 × 16	230 × 210 × 98	440 × 250 × 250
Quantity (PCS)	48	240	960
Notes: Packaging dimensions and quantity are for reference only.			

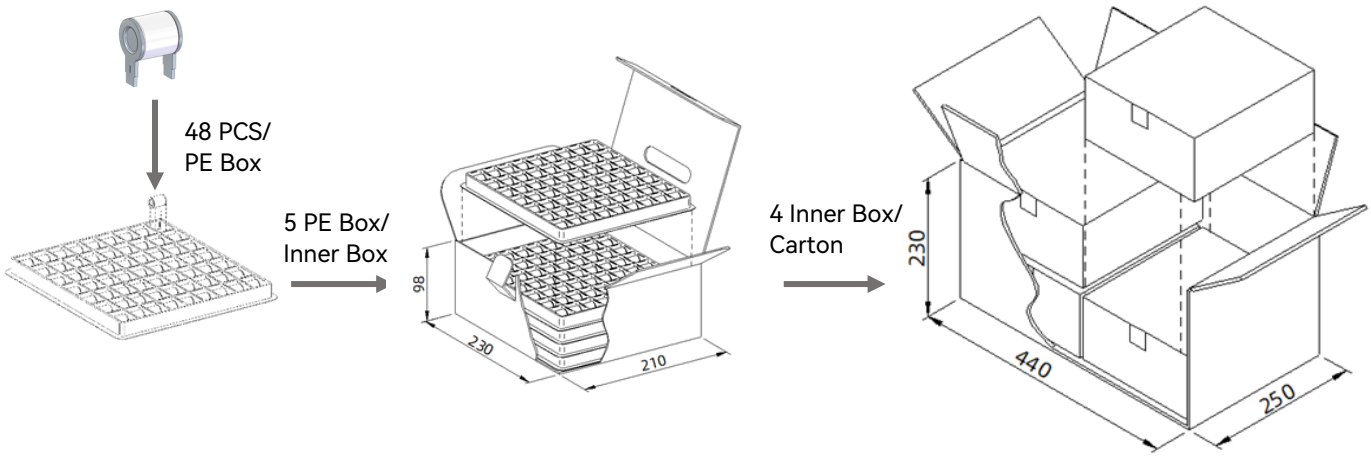

The above picture packaging is only suitable for type C products. For the other appearance and packaging mode and quantity, please refer to the specification.

All Rights Reserved by Xiamen SET Electronics Co., Ltd. 2024-2026 V1.1

Description

Gas Discharge Tube (GDT) is a single-gap or multi-gap switching overvoltage protection device. Under normal circumstances, the GDT is in a high-impedance state; when suffer a surge, the GDT will change from a high-impedance state to a low-impedance state, and release the surge energy to the ground, reducing the residual voltage of the circuit, thereby protecting the equipment circuit or protect the human body from the hazards of transient overvoltage. GDT is formed by high-temperature sealing of metal electrodes, metallized ceramics, inert gas or other mixed gases.

Features

- Fast Response
- Stable Performance Over Surface Life
- High Current Rating
- Low Capacitance
- High Insulation Resistance
- RoHS & REACH Compliant

Agency Information

Agency Symbol	Standards	The File No. and certification No. obtained by SETsafe | SETfuse
	UL1449	On-going
c	UL1449	On-going

Applications

- Surge Protective Device
- New Energy

Dimensions (mm)

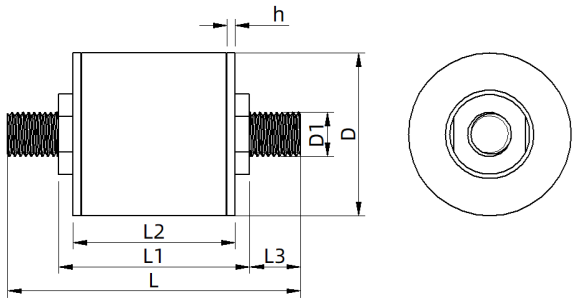

D	D1	h	L
Φ30.0 ± 0.5	M8	1.0	57.8 ± 1
L1	**L2**	**L3**	
35.2 ± 0.5	30.0 ± 0.5	9.2	

Notes: May increase each kind of connect mode according to the customer different demand.

Part Numbering System

SP O 601 P - XX

- Lead Type
  A: No Lead, B: Single Lead,
  C: With Lead, 0、1、2.....
  With Different Lead)
- Nominal Discharge Current
  (P: 100 kA)
- D.C. Spark-over Voltage (100 V/s)
  (601: 60 × 10^1)
- Product Structure:
  Φ 30.0 × 30.0 mm
- Series: SP

Reminder:
Part numbering system in the datasheet is only for selecting correct parameter and product features. Before placing order, please contact us for specifications and use the part number and product code in the specifications to place order to ensure the part is correct. Product code is the unique indentification.

All Rights Reserved by Xiamen SET Electronics Co., Ltd. 2024-2026 V1.1

Specifications

Model			SPO601P - XX	SPO801P - XX	Units
Category			I & II	I & II	
Application			N - PE	N - PE	
Nominal D.C. Spark-over Voltage (100 V/s)			600	800	V
D.C. Spark-over Voltage (100 V/s)			480 ~ 720	640 ~ 960	V
Impulse Spark-over Voltage @1 kV/μs			< 1200	< 1600	V
GB/T18802.311					
Nominal Impulse Discharge Current @8/20 μs I_n			100	100	kA
Maximum Impulse Discharge Current @8/20 μs I_{max}			120	120	kA
Class I / II (Comply with IEC61643-11)					
Max Continuous Operating Voltage U_c 50/60 Hz			255	255	Vrms
Follow Current Cut-off Ability AC 50/60 Hz I_f			100	100	Arms
Nominal Discharge Current @8/20 μs I_n			100	100	kA
Maximum Discharge Current @8/20 μs I_{max}			100	100	kA
Impulse Discharge Current @10/350 μs			100	100	kA
Insulation Resistance (100 VDC)			> 1000	> 1000	MΩ
Capacitance at 100 kHz			< 10	< 10	pF
Agency Approvals	UL1449		⊙	⊙	
	UL1449		⊙	⊙	
	TUV		○	○	

Note:

1. The above parameters based on ITU-T K12 & IEC61643.311、IEC61643.11 standards.
2. Connect mode according to the customer different demand.
3. "⊙" means GDT has planed the certification, "○" means GDT is no certification.
4. Operating Temperature -40 °C ~ +125 °C .

All Rights Reserved by Xiamen SET Electronics Co., Ltd. 2024-2026 V1.1

Packaging Information

EPE Box Package

Item	EPE Box	Inner Box	Carton
Dimensions (mm)	225 × 205 × 20	230 × 210 × 98	440 × 250 × 230
Quantity (PCS)	15	30	120
Notes: Packaging dimensions and quantity are for reference only.			

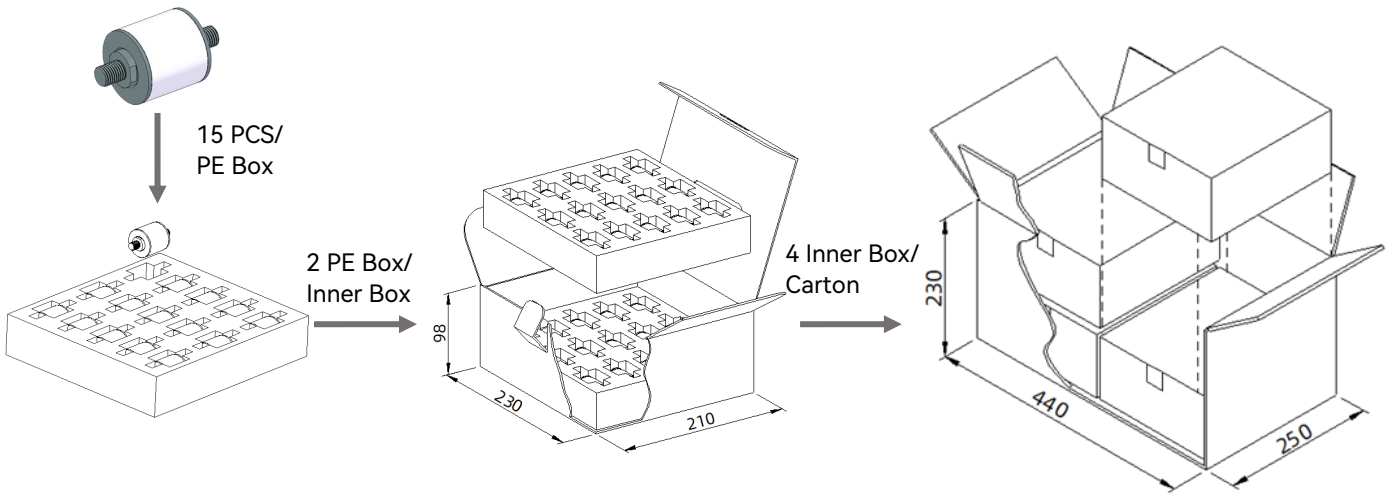

The above picture packaging is only suitable for type C products. For the other appearance and packaging mode and quantity, please refer to the specification.

All Rights Reserved by Xiamen SET Electronics Co., Ltd. 2024-2026 V1.1

Description

Gas Discharge Tube (GDT) is a single-gap or multi-gap switching overvoltage protection device. Under normal circumstances, the GDT is in a high-impedance state; when suffer a surge, the GDT will change from a high-impedance state to a low-impedance state, and release the surge energy to the ground, reducing the residual voltage of the circuit, thereby protecting the equipment circuit or protect the human body from the hazards of transient overvoltage. GDT is formed by high-temperature sealing of metal electrodes, metallized ceramics, inert gas or other mixed gases.

Features

- Fast Response
- Stable Performance Over Surface Life
- High Current Rating
- Low Capacitance
- High Insulation Resistance
- RoHS & REACH Compliant

Agency Information

Agency Symbol	Standards	The File No. and certification No. obtained by SETsafe | SETfuse
	UL1449	E322662
c	UL1449	E322662

Applications

- Telecom Equipment
- Power supply
- DC Power supply-48 VDC

Dimensions (mm)

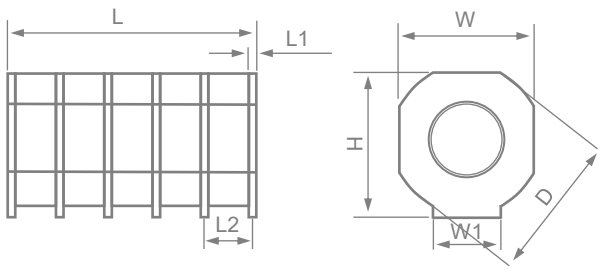

L	W	H	D
16.0 ± 0.5	8.4 ± 0.3	9.05 ± 0.2	9.3 ± 0.2
L1	**L2**	**W1**	
0.5	3.1	4.2	

Notes: May increase each kind of connect mode according to the customer different demand.

Part Numbering System

TP A 801 H - XX

- Lead Type
  A: No Lead, B: Single Lead,
  C: With Lead, 0、1、2.....
  With Different Lead)
- Nominal Discharge Current
  (H: 20 kA)
- D.C. Spark-over Voltage (100 V/s)
  (801: 80 × 10^1)
- Product Structure:
  16.0 × 8.4 × 9.3 mm
- Series: SP

Reminder:
Part numbering system in the datasheet is only for selecting correct parameter and product features. Before placing order, please contact us for specifications and use the part number and product code in the specifications to place order to ensure the part is correct. Product code is the unique indentification.

All Rights Reserved by Xiamen SET Electronics Co., Ltd. 2024-2026 V1.1

Specifications

Model			TPA801H - XX	TPA142H - XX	Units
Category			II	II	
Application			DC48	DC48	
Nominal D.C. Spark-over Voltage (100 V/s)			800	1400	V
D.C. Spark-over Voltage (100 V/s)			600 ~ 1100	950 ~ 1700	V
Impulse Spark-over Voltage @1 kV/μs			< 2500	< 4000	V
Front of Wave Spark-over Voltage Initial (at 6 kV@1.2/50 μs)①			< 900	< 1000	V
GB/T18802.311					
Nominal Impulse Discharge Current @8/20 μs I_n			20	20	kA
Maximum Impulse Discharge Current @8/20 μs I_{max}			25	25	kA
Class Ⅱ (Comply with IEC61643-11)					
Max Continuous Operating Voltage U_{DC}			48	48	VDC
Nominal Discharge Current @8/20 μs I_n			20	20	kA
Maximum Discharge Current @8/20 μs I_{max}			25	25	kA
Impulse Discharge Current @10/350 μs			2.5	2.5	kA
Insulation Resistance (100 VDC)			> 1000	> 1000	MΩ
Capacitance at 100 kHz			< 10	< 10	pF
Agency Approvals	UL1449		●	○	
	UL1449		●	○	
	TUV		○	○	

Note:

1. The above parameters based on ITU-T K12 & IEC61643.311、IEC61643.11 standards.
2. Connect mode according to the customer different demand.
3. "●" means GDT has gained the certification, "○" means GDT is no certification.
4. ①Test Under the refer to circuit。
5. Operating Temperature -40 °C ~ +125 °C .

All Rights Reserved by Xiamen SET Electronics Co., Ltd. 2024-2026 V1.1

Packaging Information

Tape & Reel (SMD)

Item	Reel	Inner Box	Carton
Dimensions (mm)	Φ330 × 44	340 × 340 × 55	360 × 360 × 360
Quantity (PCS)	300	300	1800
Notes: Packaging dimensions and quantity are for reference only.			

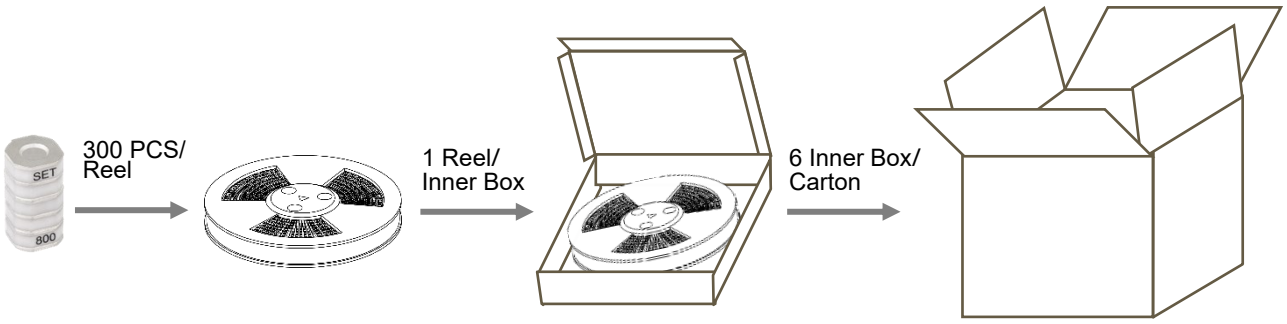

The above picture packaging is only suitable for type A products. For the other appearance and packaging mode and quantity, please refer to the specification.

All Rights Reserved by Xiamen SET Electronics Co., Ltd. 2024-2026 V1.1

www.SETsafe.com
www.SETfuse.com

20+

OVER 20 YEARS OF DESIGNING, MANUFACTURING AND SELLING OF CIRCUIT PROTECTION COMPONENTS

40+

SOLD TO MORE THAN 40 COUNTRIES AND REGIONS

Automatic

AUTOMATIC PROCESS PRODUCTION

500

A BRAND CHOSEN BY FORTUNE 500 COMPANIES

SET safe | SET fuse

NO. 8067, 8001 West Xiang'an Road,Torch High-tech industrial District, Xiang'an 361101 Xiamen P.R. China
+ 86 592-5715-838 sales@SETfuse.com

All Rights Reserved by Xiamen SET Electronics Co., Ltd. Ver. 2024 - 2026