Thermal-Link

Alloy Type

ATCO

- Low Impedance
- Miniaturized Size
- Sealed Construction
- Radial and Axial Shapes
- Rated Current: (1 to 200) A
- Lead Wires Can Be Insulated
- High Accuracy of Functioning Temp.
- Non-resettable Over Temp. Protection
- Rated Functioning Temp.: (76 to 230) °C
- RoHS and REACH compliant

Please refer to the datasheet of each series.

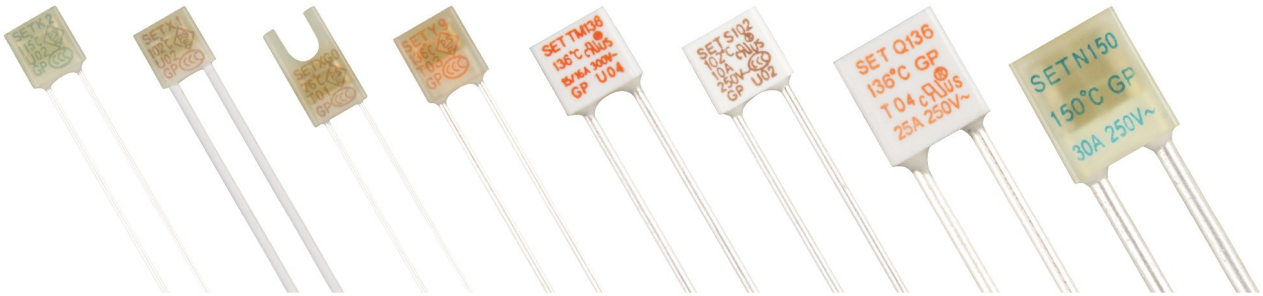

https://setsafe.com/Product/Over-Temperature-Protection/Thermal-Link-ATCO-Alloy-Type.html

2026

SET safe | SET fuse

Providing Total Solution for High Standard Safety Circuit Protection

Thermal-Link (ATCO)-Alloy Type

Thermal-Link (ATCO) - Alloy Type is defined as a non-resettable protective device functioning one time only that uses low melting point fusible alloy as temperature sensing material. Normally, fusible alloy is jointed to the two lead wires, Under abnormal conditions, when the temp. reaches to the fusing temp. of ATCO, the fusible alloy melts and quickly retracts to the two lead wire ends with the aid of the flux resin and disconnects the circuit completely. ATCO is mainly consist of fusible alloy, flux resin, case, sealant and lead wires.

ATCO products are widely used in electrical equipment.

SETsafe | SETfuse Thermal-Link (ATCO)-Alloy Type is divided into axial and radial types; Rated Functioning Temp. : (76 ~ 230)℃; Rated Current: (1 ~ 200) A; Rated voltage: (250~800) VAC; safety certification includes UL, cUL, TUV, PSE, VDE, KC, CCC, and complies with RoHS and REACH.

All Rights Reserved by Xiamen SET Electronics Co., Ltd. 2024-2026 V1.1

Contents

1 Feature & Model List Overview 1

2 Glossary 5

3 Attention 6

4 Product Series 9

Description, Feature, Applications, Customization, Structure Diagrams, Marking, Dimensions, Specifications, Agency Information, Soldering, Product Temp.-Time Curve, Product Current - Time Curve, Packaging Information, Part Numbering System

4.1 F series 9

4.2 K series 17

4.3 KG series 25

4.4 X series 33

4.5 XG series 41

4.6 KM series 49

4.7 XM series 56

4.8 Y series 63

4.9 YM series 71

4.10 S series 78

4.11 T series 85

4.12 SM series 92

4.13 TM series 99

4.14 P series 106

4.15 Q series 113

4.16 SK series 120

4.17 SE series 128

4.18 SKL series 136

4.19 TK series 143

All Rights Reserved by Xiamen SET Electronics Co., Ltd. 2024-2026 V1.1

Contents

4.20 SY series 151
4.21 TY series 158
4.22 SD series 165
4.23 TD series 172
4.24 PD series 179
4.25 QD series 186
4.26 N series 193
4.27 G series 200
4.28 NB series 207
4.29 V series 214
4.30 H series 223
4.31 B series 231
4.32 SF series 239
4.33 C series 246
4.34 M series 254
4.35 U series 261
4.36 R series 269
4.37 CR series 277
4.38 HS series 284
4.39 HP series 291
4.40 HN series 298

All Rights Reserved by Xiamen SET Electronics Co., Ltd. 2024-2026 V1.1

Thermal-Link (ATCO)-Alloy Type Feature & Model List Overview

Rated Functioning Temp. T_f (°C) \ Model	214	223	231	246	261	269	*	9	17	33	63	78	85	106	113	193	200	25	41	120	136	128	143
230	○	○	○	○	○	○	○	○	○	○	○	○	○	○	○	○	○	○	○	○	SKL230	SE230	○
221	V31	H31	B31	C31	U31	R31	RQ221	○	K31	X31	○	○	○	○	○	○	○	KG31	XG31	SK221	○	SE221	TK221
205	V32	H32	B32	C32	U32	R32	RQ205	○	K32	X32	○	○	○	○	○	○	○	KG32	XG32	SK205	○	○	TK205
200	○	○	○	○	○	○	○	○	○	○	○	○	○	○	○	○	○	○	○	○	SKL200	SE200	○
187	○	○	○	○	○	○	○	○	K17	X17	Y17	○	○	○	○	○	○	○	○	○	○	○	○
160	V16	H16	B16	C16	U16	R16	○	F16	K16	X16	Y16	○	○	○	○	○	○	KG16	XG16	SK160	○	SE160	TK160
150	V7	H7	B7	C7	U7	R7	RQ150	F7	K7	X7	Y7	S150	T150	○	○	N150	G150	KG7	XG7	SK150	○	SE150	TK150
145	V6	H6	B6	C6	U6	R6	○	F6	K6	X6	Y6	○	○	○	○	○	○	KG6	XG6	SK145	○	SE145	TK145
139	V13	H13	B13	C13	○	○	○	○	○	○	○	○	○	○	○	○	○	○	○	○	○	○	○
136	V9	H9	B9	C9	○	○		○	K9	X9	Y9	S136	T136	P136	Q136	N136	G136	KG9	XG9	○	○	○	○
135	V5	H5	B5	C5	U5	R5	○	○	K5	X5	○	○	○	○	○	○	○	KG5	XG5	SK135	○	SE135	TK135
133	V8	H8	B8	C8	○	○	○	F8	K8	X8	Y8	○	○	○	○	○	○	KG8	XG8	○	○	○	○
130	V4	H4	B4	C4	U4	R4	RQ130	F4	K4	X4	Y4	○	○	○	○	N130	G130	KG4	XG4	SK130	○	○	TK130
125	V3	H3	B3	C3	U3	R3	RQ125	F3	K3	X3	Y3	S125	T125	○	○	N125	G125	KG3	XG3	SK125	○	SE125	TK125
123	○	○	○	○	○	○	○	○	○	○	○	○	○	○	○	○	○	○	○	○	○	○	○
120	○	○	○	○	○	○	○	○	○	○	○	○	○	○	○	○	○	○	○	○	○	○	○
115	V2	H2	B2	C2	U2	R2	RQ115	F2	K2	X2	Y2	S115	T115	P115	Q115	N115	G115	KG2	XG2	SK115	○	SE115	TK115
105	○	○	○	○	○	○	○	○	○	○	○	○	○	○	○	○	○	○	○	○	○	○	○
102	V1	H1	B1	C1	U1	R1	○	F1	K1	X1	Y1	S102	T102	○	○	N102	G102	KG1	XG1	SK102	○	SE102	TK102
97	V21	H21	B21	C21	○	○	○	○	○	○	○	○	○	○	○	○	○	○	○	○	○	○	○
95	○	○	○	○	○	○	○	○	○	○	○	○	○	○	○	○	○	○	○	○	○	○	○
86	V18	H18	B18	C18	U18	R18	○	F18	K18	X18	Y18	○	○	○	○	○	○	KG18	XG18	○	○	○	○
76	V0	H0	B0	C0	U0	R0	○	F0	K0	X0	Y0	○	○	○	○	○	○	KG0	XG0	○	○	○	○
I_r (A) Rated Current	1	2	3	5	10	15	20	1	2	3	5	10	15 16	20	25	30	40	2	3	10	10	10	15 16
U_r (VAC) Rated Voltage	250																						

Product Structure

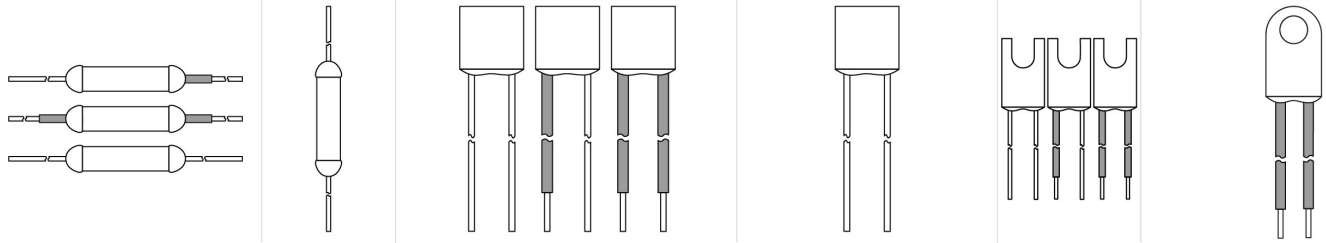

Axial Shape | Radial Shape | Radial Shape (Screw Hole)

Lead wire can be customized.

Note:

*Indicates that the product is under development.

All Rights Reserved by Xiamen SET Electronics Co., Ltd. 2024-2026 V1.1

Thermal-Link (ATCO)-Alloy Type Feature & Model List Overview

Rated Functioning Temp. T_f (°C)	151	158	49	56	71	63	92	99	113	49	56	106	113	71	*	*	284	291	71	*	298	*	*
230	○	○	○	○	○	○	○	○	○	○	○	○	○	○	○	○	○	○	○	○	○	○	○
221	○	○	○	○	○	○	○	○	○	○	○	○	○	○	○	○	○	○	○	○	○	○	○
205	○	○	○	○	○	○	○	○	○	○	○	○	○	○	○	○	○	○	○	○	○	○	○
200	○	○	○	○	○	○	○	○	○	○	○	○	○	○	○	○	○	○	○	○	○	○	○
187	○	○	○	○	○	○	○	○	○	○	○	○	○	○	○	○	○	○	○	○	○	○	○
160	○	○	○	○	○	○	○	○	○	○	○	○	○	○	○	○	○	○	○	○	○	○	○
150	○	○	KM7	XM7	YM7	Y7	SM150	TM150	○	KM7	XM7	○	○	YM7	HU7	HR7	○	○	YM7	HC7	○	HL7	HW7
145	SY145	TY145	○	○	○	○	○	○	○	○	○	○	○	○	HU6	HR6	HS145	HP145	○	HC6	HN145	HL6	HW6
139	○	○	○	○	○	○	○	○	○	○	○	○	○	○	○	○	○	○	○	○	○	○	○
136	○	○	○	○	YM9	Y9	SM136	TM136	Q136	○	○	P136	Q136	YM9	○	○	HS136	HP136	YM9	○	HN136	○	○
135	○	○	KM5	XM5	○	○	○	○	○	KM5	XM5	○	○	○	HU5	HR5	○	○	○	HC5	○	HL5	HW5
133	○	○	○	○	○	○	○	○	○	○	○	○	○	○	○	○	○	○	○	○	○	○	○
130	SY130	TY130	KM4	XM4	YM4	Y4	○	○	○	KM4	XM4	○	○	YM4	HU4	HR4	○	○	YM4	○	○	HL4	HW4
125	SY125	TY125	○	○	○	○	○	○	○	KM3	XM3	P125	Q125	○	HU3	HR3	HS125	HP125	○	HC3	HN125	HL3	HW3
123	○	○	○	○	○	○	○	○	○	○	○	○	○	○	○	○	○	○	○	○	○	○	○
120	SY120	TY120	○	○	○	○	○	○	○	○	○	○	○	○	○	○	○	○	○	○	○	○	○
115	SY115	TY115	○	○	○	○	SM115	TM115	Q115	○	○	P115	Q115	○	HU2	HR2	○	○	○	HC2	○	HL2	HW2
105	SY105	TY105	○	○	○	○	○	○	○	○	○	○	○	○	○	○	○	○	○	○	○	○	○
102	○	○	○	○	○	○	SM102	TM102	○	○	○	P102	Q102	○	HU1	HR1	○	○	○	HC1	○	HL1	HW1
97	○	○	○	○	○	○	○	○	○	○	○	○	○	○	○	○	○	○	○	○	○	○	○
95	SY95	TY95	○	○	○	○	○	○	○	○	○	○	○	○	○	○	○	○	○	○	○	○	○
86	○	○	○	○	○	○	○	○	○	○	○	○	○	○	HU18	HR18	○	○	○	HC18	○	HL18	HW18
76	○	○	○	○	○	○	○	○	○	○	○	○	○	○	HU0	HR0	○	○	○	HC0	○	HL0	HW0
I_r (A) Rated Current	10	15	2	3	5	5	10	15 16	25	2	3	20	25	5	10	15	5	10	5	5	15	10	15
U_r (VAC) Rated Voltage	250		300							320		400		500					690			800	
Product Structure	Cylindrical		Radial Shape											Axial Shape			Axial Shape (Flat Electrode)		Radial Shape	Axial Shape	Axial Shape (Flat Electrode)	Axial Shape	

Page

Model

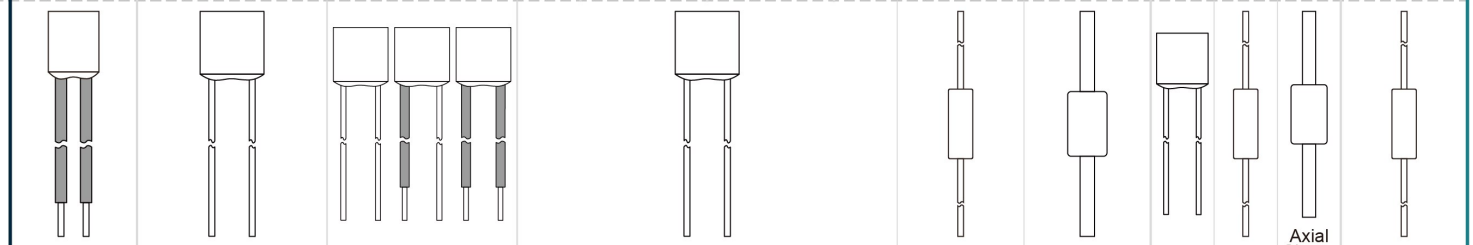

Lead wire can be customized.

Note:

*Indicates that the product is under development.

All Rights Reserved by Xiamen SET Electronics Co., Ltd. 2024-2026 V1.1

Thermal-Link (ATCO)-Alloy Type Feature & Model List Overview

Rated Functioning Temp. T_f (°C) \ Page	214	223	231	246	246	214	223	214	231	239	239	214	246	246	246	246	254	246	261	277	269
230	○	○	○	○	○	○	○	○	○	○	○	○	○	○	○	○	○	○	○	○	○
221	○	○	○	○	○	V31	H31	○	B31	○	○	○	C31	○	○	○	○	○	U31	○	R31
205	○	○	○	○	○	V32	H32	○	B32	○	○	○	C32	○	○	○	○	○	U32	○	R32
200	○	○	○	○	○	○	○	○	○	○	○	○	○	○	○	○	○	○	○	○	○
187	○	○	○	○	○	○	○	○	○	○	○	○	○	○	○	○	○	○	○	○	○
160	○	○	○	○	○	V16	H16	○	B16	○	○	○	C16	○	○	○	○	○	U16	○	R16
150	V7	H7	B7	○	C7	○	○	○	○	○	○	○	○	○	○	○	○	○	U7	○	R7
145	V6	H6	B6	○	C6	○	○	○	○	○	○	○	○	○	○	○	○	C6	U6	○	R6
139	V13	H13	B13	○	C13	○	○	○	○	○	SF13	V13	○	○	○	C13	M13	○	○	CR13	○
136	V9	H9	B9	○	C9	○	○	○	○	○	○	○	○	○	○	○	○	○	○	○	○
135	V5	H5	B5	○	C5	○	○	○	○	○	○	○	○	○	○	○	○	○	U5	○	R5
133	V8	H8	B8	○	C8	○	○	○	○	SF8	○	V8	○	○	○	○	○	○	○	○	○
130	V4	H4	B4	○	C4	○	○	○	○	SF4	○	V4	○	○	○	○	○	○	U4	○	R4
125	V3	○	B3	○	C3	○	H3	○	○	○	○	○	○	○	○	○	○	○	U3	○	R3
123	○	○	○	○	○	○	○	○	○	○	○	○	○	○	○	○	○	○	○	○	○
120	○	○	○	○	○	○	○	○	○	○	○	○	○	○	○	○	○	○	○	○	○
115	V2	H2	B2	○	C2	○	○	○	○	SF2	○	V2	○	○	C2	○	○	○	U2	○	R2
105	○	○	○	○	○	○	○	○	○	○	○	○	○	○	○	○	○	○	○	○	○
102	V1	H1	B1	C1	○	○	○	○	○	○	○	○	○	○	○	○	○	○	U1	○	R1
97	V21	H21	B21	C21	○	○	○	○	○	○	○	○	○	○	○	○	○	○	○	○	○
95	○	○	○	○	○	○	○	○	○	○	○	○	○	○	○	○	○	○	○	○	○
86	V18	H18	B18	C18	○	○	○	V18	○	○	○	○	○	C18	○	○	○	○	U18	○	R18
76	V0	H0	B0	C0	○	○	○	○	○	○	○	○	○	○	○	○	○	○	U0	○	R0
I_r (A) Rated Current	1	2	3	5	7	1	2	2.5	3	3	5	4	5	6	8	8.5	9	10	10	15	15
U_r (VDC) Rated Voltage	50					60															

Model

Product Structure

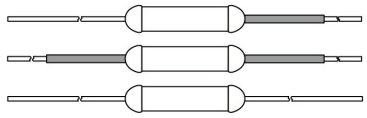

Axial Shape

Lead wire can be customized.

All Rights Reserved by Xiamen SET Electronics Co., Ltd. 2024-2026 V1.1

Thermal-Link (ATCO)-Alloy Type Feature & Model List Overview

Rated Functioning Temp. T_f (°C)	25	41	17	33	9	33	78	85	106	113	*	165	172	179	186	284	291	298
230	○	○	○	○	○	○	○	○	○	○	○	○	○	○	○	○	○	○
221	○	○	○	○	○	○	○	○	○	○	○	○	○	○	○	○	○	○
205	○	○	○	○	○	○	○	○	○	○	○	○	○	○	○	○	○	○
200	○	○	○	○	○	○	○	○	○	○	○	○	○	○	○	○	○	○
187	○	○	○	○	○	○	○	○	○	○	○	○	○	○	○	○	○	○
160	○	○	○	○	○	○	○	○	○	○	○	○	○	○	○	○	○	○
150	○	○	○	○	○	○	S150	T150	○	○	GA150	SD150	TD150	PD150	QD150	HS150	HP150	HN150
145	○	○	○	○	F6	X6	○	○	○	○	○	○	○	○	○	○	○	○
139	○	○	○	○	F13	○	○	○	○	○	○	○	○	○	○	○	○	○
136	○	○	○	○	○	X9	S136	T136	P136	Q136	GA136	SD136	TD136	PD136	QD136	HS136	HP136	HN136
135	○	○	○	○	○	○	○	○	○	○	○	○	○	○	○	○	○	○
133	○	○	○	○	F8	○	○	○	○	○	○	○	○	○	○	○	○	○
130	○	○	○	○	F4	○	○	○	○	○	GA130	SD130	TD130	PD130	QD130	○	○	○
125	KG3	XG3	K3	X3	○	○	S125	T125	P125	Q125	GA125	SD125	TD125	PD125	QD125	HS125	HP125	HN125
123	○	○	○	○	○	○	○	○	○	○	○	○	○	○	○	○	○	○
120	○	○	○	○	○	○	○	○	○	○	○	○	○	○	○	○	○	○
115	KG2	XG2	K2	X2	F2	○	S115	T115	P115	Q115	GA115	SD115	TD115	PD115	QD115	○	○	○
105	○	○	○	○	○	○	○	○	○	○	○	○	○	○	○	○	○	○
102	KG1	XG1	K1	X1	F1	○	S102	T102	P102	Q102	GA102	SD102	TD102	PD102	QD102	○	○	○
97	○	○	○	○	○	○	○	○	○	○	○	○	○	○	○	○	○	○
95	○	○	○	○	○	○	○	○	○	○	○	○	○	○	○	○	○	○
86	KG18	XG18	K18	X18	F18	○	○	○	○	○	GA86	○	○	○	○	○	○	○
76	○	○	○	○	○	○	○	○	○	○	GA76	○	○	○	○	○	○	○
I_r (A) Rated Current	2	3	2	3	3	4	10	15 16	20	25	50	10	15 16	20	25	5	10	
U_r (VDC) Rated Voltage	60						100		120			125				200		
Product Structure	Radial Shape (Screw Hole)						Radial Shape									Axial Shape (Flat Electrode)		

Lead wire can be customized.

Page

Model

All Rights Reserved by Xiamen SET Electronics Co., Ltd. 2024-2026 V1.1

Glossary

Item	Description
TCO	**Thermal-Link** A non-resettable device incorporating a THERMAL ELEMENT which will open a circuit once only when exposed for a sufficient length of time to a temperature in excess of that for which it has been designed. — (GB 9816.1)
ATCO	**Alloy Thermal-Link** Alloy Type Thermal-Link, Alloy is the thermal element. — (GB 9816.1)
T_f	**Rated Functioning Temp.** The temperature of the Alloy Thermal-Link which causes it to change the state of conductivity with a detection current up to 10 mA as the only load. — (GB 9816.1) Tolerance: T_f °C (GB 9816.1, EN 60691, K60691). Tolerance: T_f ± 7 °C (J60691).
Fusing Temp.	**Fusing Temp.** The temperature of the Alloy Thermal-Link which causes it to change its state of conductivity is measured with silicone oil bath in which the temperature is increased at the rate of 0.5 °C to 1 °C / minute, with a detection current up to 10 mA as the only load. — (GB 9816.1)
T_h	**Holding Temp.** The Maximum temperature at which a Alloy Thermal-Link will not change its state of conductivity when conducting rated current for 168 hours. — (GB 9816.1)
T_m	**Maximum Temp. Limit** The temperature of the Alloy Thermal-Link stated by the manufacturer, up to which the mechanical and electrical properties of the Alloy Thermal-Link having changed its state of conductivity, will not be impaired for a given time. — (GB 9816.1)
I_r	**Rated Current** The current used to classify a Alloy Thermal-Link. — (GB 9816.1)
U_r	**Rated Voltage** The voltage used to classify a Alloy Thermal-Link. — (GB 9816.1)
I_n	**Nominal Discharge Current** Being able to withstand 15 peak currents of waveform 8/20 μs to test the product's durability of withstanding pulse current. — (UL 1449)
I_{max}	**Max. Discharge Current** Being able to withstand 1 peak current of waveform 8/20 μs to test max. pulse current that the product can withstand. — (UL 1449)

All Rights Reserved by Xiamen SET Electronics Co., Ltd. 2024-2026 V1.1

Thermal-Link (ATCO)-Alloy Type

ATTENTION

Usage

1. When atmosphere pressure is from 80 kPa to 106 kPa, the related altitude shall be from 2000 meters to - 500 meters.
2. Operating voltage less than rated voltage of ATCO, operating current less than rated current of ATCO.
3. Do not touch the ATCO body or lead wires directly when power is on, to avoid burn or electric shock.

Replace

ATCO is a non-repairable product. For safety sake, it shall be replaced by an equivalent ATCO from the same manufacturer, and mounted in the same way.

Storage

Do not store the ATCO at the high temp., high humidity or corrosive gas environment, avoid influencing the solder-ability of the lead wires, the product shall be used up within 1 year after receiving the goods.

Installation

Make Sure the Temp. of Installation Position.

1. It is recommended that a dummy ATCO with inbuilt thermo-couple shall be used to determine the proper temp.
2. The terminal product should be tested to ensure that potential abnormal conditions do not cause ambient temp. to exceed the T_m of the ATCO.
3. Mount the ATCO at the location where temp. rises evenly.

Installation position of mechanical performance requirements.

1. Do not locate the ATCO in a place where severe vibration always occurs.
2. Ensure that the lead wire is long enough, and avoid actions such as press, tensile or twist.
3. The seal or body of ATCO must not be damaged, burned or over heated.

All Rights Reserved by Xiamen SET Electronics Co., Ltd. 2024-2026 V1.1

Mechanical Connection

Riveting

1. Choose small resistivity riveting material and be riveted.
2. A flexible lead or lead with low resistance should be used to rivet the ATCO.
3. Contact resistance should be minimal, large contact resistance will lead to higher temp., ATCO Functioning in advance.

Crimping

1. Choose small resistivity crimping material and be crimped.
2. A flexible lead or lead with low resistance should be used to rivet the ATCO.
3. Contact resistance should be minimal, large contact resistance will lead to higher Temp., ATCO Functioning in advance.

Lead Wire Forming

1. If lead wire has to be bent, please pay attention to the distance between body and bending point. Refer to Table T-1.
2. When bending leads, please use pincher or similar tools to fix the product as shown in Fig.T-1, to avoid damaging the product.
3. During forming and mounting, lead wire should not be cut, nicked, bent sharply, to avoid breaking the product.
4. Tangential forces on the leads must be avoided (i.e. pushing or pulling on the leads at angle to ATCO body) as such forces may damage the seal of ATCO.

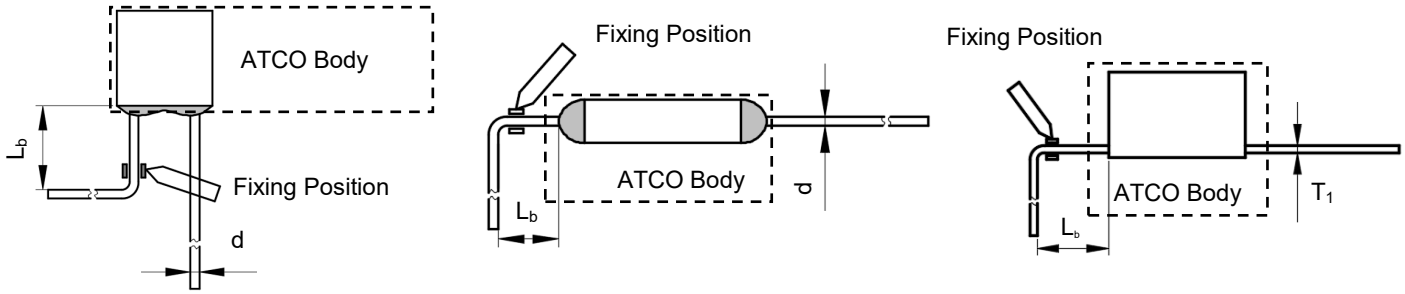

FIGURE T-1

TABLE T-1 Distance between Body and Bending Point

Circular lead	d	(mm)	< 1.0	1.0 - 1.2	> 1.2
	L_b	(mm)	≥ 3	≥ 5	≥ 10

Flat Electrode Chamber	T_1	(mm)	< 0.25	0.25 - 0.5	> 0.5
	L_b	(mm)	≥ 3	≥ 5	≥ 10

All Rights Reserved by Xiamen SET Electronics Co., Ltd. 2024-2026 V1.1

Leads Forming Types

The below leads forming is for reference, more leads forming can be customized.

Radial

A	B	C	D	E
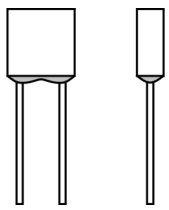	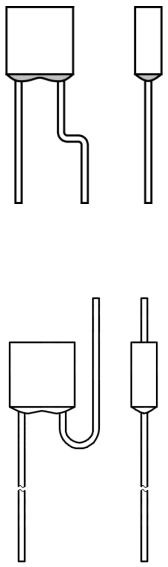	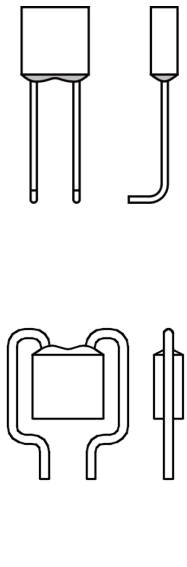	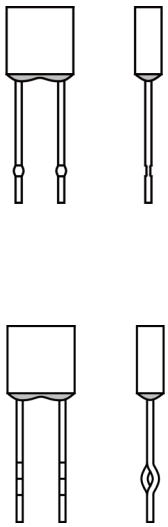	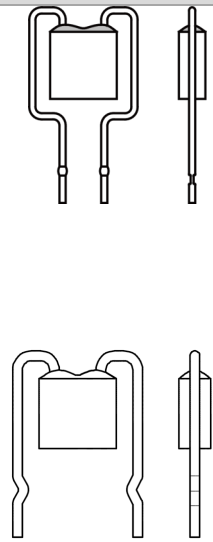

Axial

A	B	C
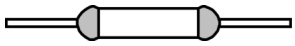	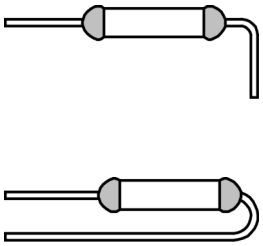	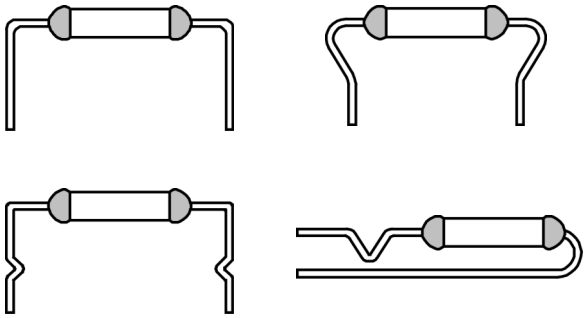

A	B	C
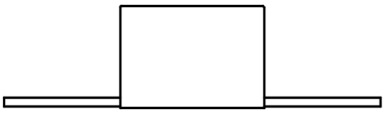	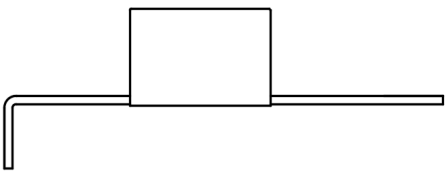	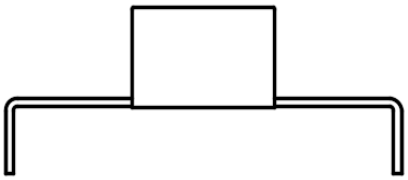

All Rights Reserved by Xiamen SET Electronics Co., Ltd. 2024-2026 V1.1

Thermal-Link (ATCO)-Alloy Type

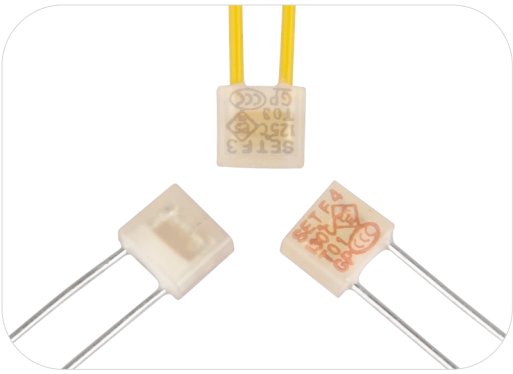

Description

Thermal-Link (ATCO)-Alloy Type is defined as a non-resettable protective device functioning one time only. It is widely used in electrical equipment. ATCO is mainly consist of fusible alloy, flux resin, case, sealant and lead wires. Normally, fusible alloy is jointed to the two lead wires. Under abnormal conditions, when the temp. reaches to the fusing temp. of ATCO, the fusible alloy melts and quickly retracts to the two lead wire ends with the aid of the flux resin and disconnects the circuit completely.

SETsafe | SETfuse Thermal-Link (ATCO)-Alloy Type F series Rated Functioning Temp. from 76 ℃ to 160 ℃, Rated Current: 1 A, 3 A, safety certification Includes UL, cUL, TUV, PSE, VDE, KC, CCC, and complies with RoHS and REACH.

Features

- Non-Resettable
- High Accuracy of Functioning Temp.
- RoHS & REACH Compliant

Applications

- Lamps
- Switched-Mode Power Supplies
- Home Electrical Appliances
- Transformers
- Motors
- Batteries

Customization

- Other Temp.
- The Length of Lead Wires
- Taping Packing Available
- Lead Wires can be Insulated
- Tinned Copper Wires or CP Wires
- Leads Forming Types

Structure Diagrams

Radial

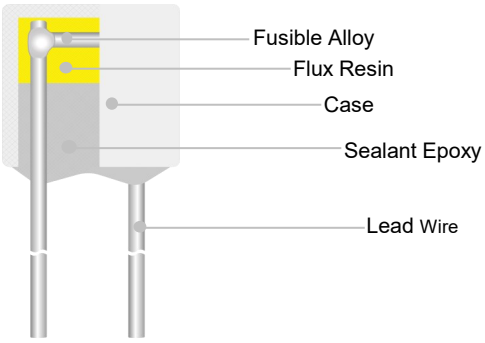

Marking

Radial (Color for reference only)

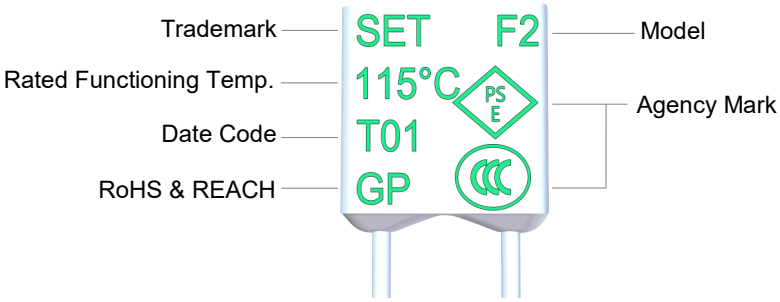

Remark: The Date Code means Year and quarter: A stands for 2000, B stands for 2001 and 01 stands for the first quarter, 02 stands for the second quarter, and so on.

Dimensions (mm)

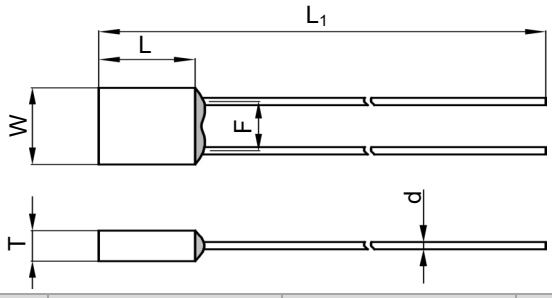

L	L_1	W	T	d	F
4.2 ± 0.5	70.0 ± 3.0	5.1 ± 0.5	2.3 ± 0.2	0.50 ± 0.05	3.2 ± 0.5

All Rights Reserved by Xiamen SET Electronics Co., Ltd. 2024-2026 V1.1

Specifications

Rated Functioning Temp. (T_f) °C	Model	Fusing Temp. (°C)	T_h (°C)	T_m (°C)	I_r (A)	U_r (V)	UL	cUL	TUV	VDE	PSE	KC	CCC	RoHS REACH
160	F16	154 ± 2	135	200	1	AC 250	○	○	○	○	●	○	●	●
						DC *	○	○	○	○	○	○	○	●
150	F7	145 ± 2	126	200	1	AC 250	●	●	●	●	●	●	●	●
						DC *	○	○	○	○	○	○	○	●
145	F6	140 ± 2	121	200	1	AC 250	●	●	●	○	●	○	○	●
			115		3	DC 60	●	●	●	○	○	○	○	●
139	F13	135 ± 2	113	200	1	AC 250	●	●	●	○	●	○	○	●
			95		3	DC 60	●	●	●	○	○	○	○	●
133	F8	130 ± 2	111	200	1	AC 250	●	●	●	●	●	●	●	●
			90		3	DC 60	●	●	●	○	○	○	○	●
130	F4	125 ± 2	106	200	1	AC 250	●	●	●	●	●	●	●	●
			90		3	DC 60	●	●	●	○	○	○	○	●
125	F3	121 ± 2	100	200	1	AC 250	●	●	●	●	●	●	●	●
						DC *	○	○	○	○	○	○	○	●
115	F2	111 ± 2	91	200	1	AC 250	●	●	●	●	●	●	●	●
			80		3	DC 60	●	●	●	○	○	○	○	●
102	F1	98 ± 3	79	200	1	AC 250	●	●	●	●	●	●	●	●
			60		3	DC 60	●	●	●	○	○	○	○	●
86	F18	81 ± 3	61	200	1	AC 250	●	●	●	○	●	○	●	●
			50		3	DC 60	●	●	●	○	○	○	○	●
76	F0	73 ± 2	53	200	1	AC 250	●	●	●	○	●	○	●	●
						DC *	○	○	○	○	○	○	○	●

Note:

1: "●"Means certificated, "○"Means non-certificated, RoHS & REACH Compliant .

2: " * "Customizable DC voltage.

All Rights Reserved by Xiamen SET Electronics Co., Ltd. 2024-2026 V1.1

Agency Information

Agency Symbol	Standards	The File No. and certification No. obtained by SETsafe | SETfuse
	UL 60691	E214712
	CAN-CSA-E60691	E214712
	EN 60691	R50161758
	EN 60691	40004041
	J60691	JET2121-32001-2021、JET2121-32001-2022 JET2121-32001-2023、JET2121-32001-2024 JET2121-32001-2025、JET2121-32001-2026 JET2121-32001-2027、JET2121-32001-2028
	K60691	SU05023-6002A、SU05023-6003B
	GB 9816.1	2020980205000190

Soldering

Hand-Soldering

1. Soldering should be carried out according to Table F-1.
2. The thermal element of ATCO is fusible alloy with low melting point, which is jointed with ATCO lead wires. Improper soldering operation (too high soldering temp. , too long soldering time, too short lead wire etc.) may transfer more heat to the thermal element and ATCO may open in advance.
3. When soldering conditions are more severe than those listed in Table F-1, a heat sink fixture should be used between soldering point and ATCO body.
4. When soldering, please do not pull / push or twist ATCO body or lead wires.
5. After soldering, let it naturally cool for longer than 20 seconds. During cooling, never move the ATCO body or lead wires.

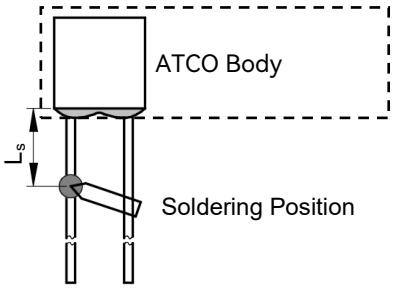

FIGURE F-1

TABLE F-1 Hand-Soldering Time

Rated Functioning Temp. (T_f)	Max. Allowable Soldering Time for Different Lead Wire Length (Fig.F-1)									Max. Soldering Temp.
	L_s Length	Time		L_s Length	Time		L_s Length	Time		
		Tinned Copper Wire	CP Wire		Tinned Copper Wire	CP Wire		Tinned Copper Wire	CP Wire	
(°C)	(mm)	(s)	(s)	(mm)	(s)	(s)	(mm)	(s)	(s)	(°C)
76 to 101	10	1[a]	4	20	2	5	30	3	6	400
102 to 115	10	1[a]	4	20	2	5	30	3	6	
116 to 135	10	1[a]	4	20	3	6	30	5	8	
136 to 150	10	3	6	20	5	8	30	5	8	
151 to 160	10	4	7	20	6	9	30	7	10	

Note:
a: Auxiliary Heat Sink Fixture is Required to Avoid ATCO Cutting off Unexpectedly.

All Rights Reserved by Xiamen SET Electronics Co., Ltd. 2024-2026 V1.1

Wave Soldering

The wave soldering parameters as Table F-2, for reference only, when ATCO is for practice use, you need to do some validation experiments. For example, using X-RAY to see the fusible alloy of ATCO whether damage after wave soldering.

TABLE F-2 Wave Soldering Parameters Setting

Rated Functioning Temp. (T_f)	Max. Allowable Preheating Temp. When the Length of Lead Wire is Different (Fig.F-1)				Preheating Time (t_1)	Max. Wave Soldering Temp.	Dwelling Time (t_2)	Cooling Time (t_3)
	L_s Length	Preheating Temp.	L_s Length	Preheating Temp.				
(°C)	(mm)	(°C)	(mm)	(°C)	(s)	(°C)	(s)	(s)
76 to 130	Recommend Hand-Soldering							
131 to 150	20	80	30	90	< 60	≤ 260	≤ 3	≤ 10
151 to 160	20	90	30	100	< 60	≤ 260	≤ 3	≤ 10

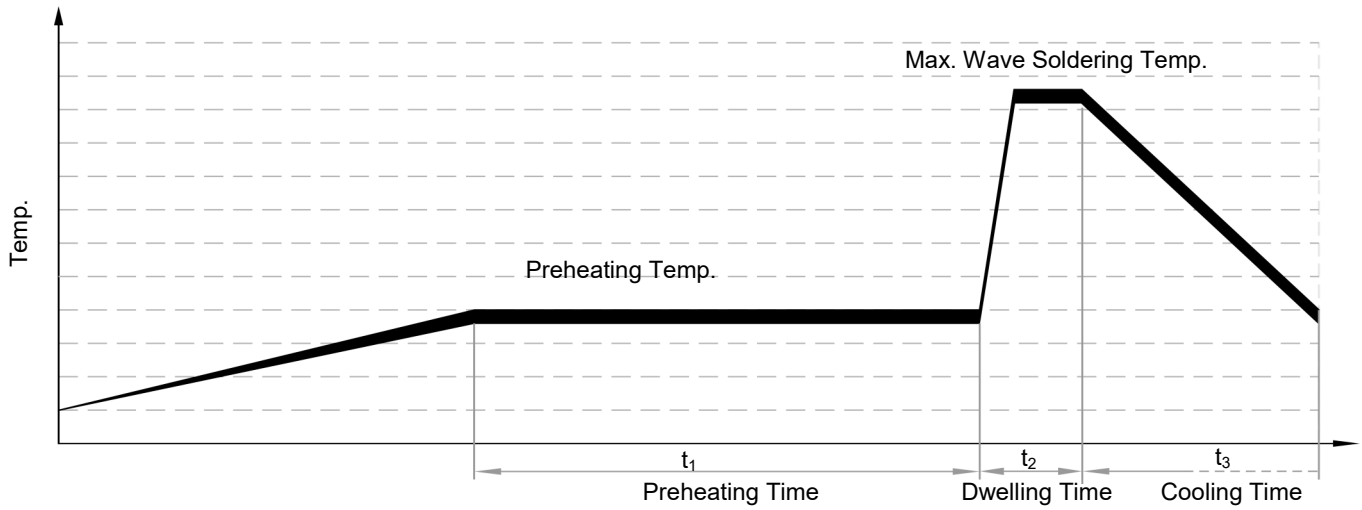

All Rights Reserved by Xiamen SET Electronics Co., Ltd. 2024-2026 V1.1

Product Temp.-Time Curve (Reference)

The Temp.-Time Curve of Thermal-Link in different temp. oil bath.

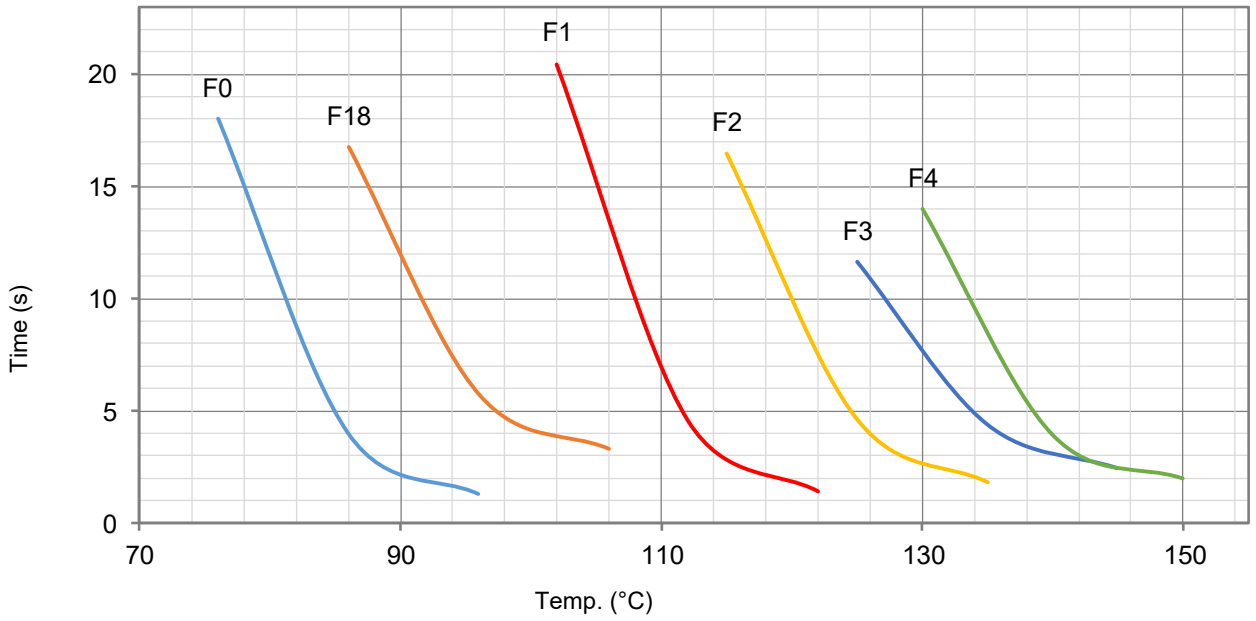

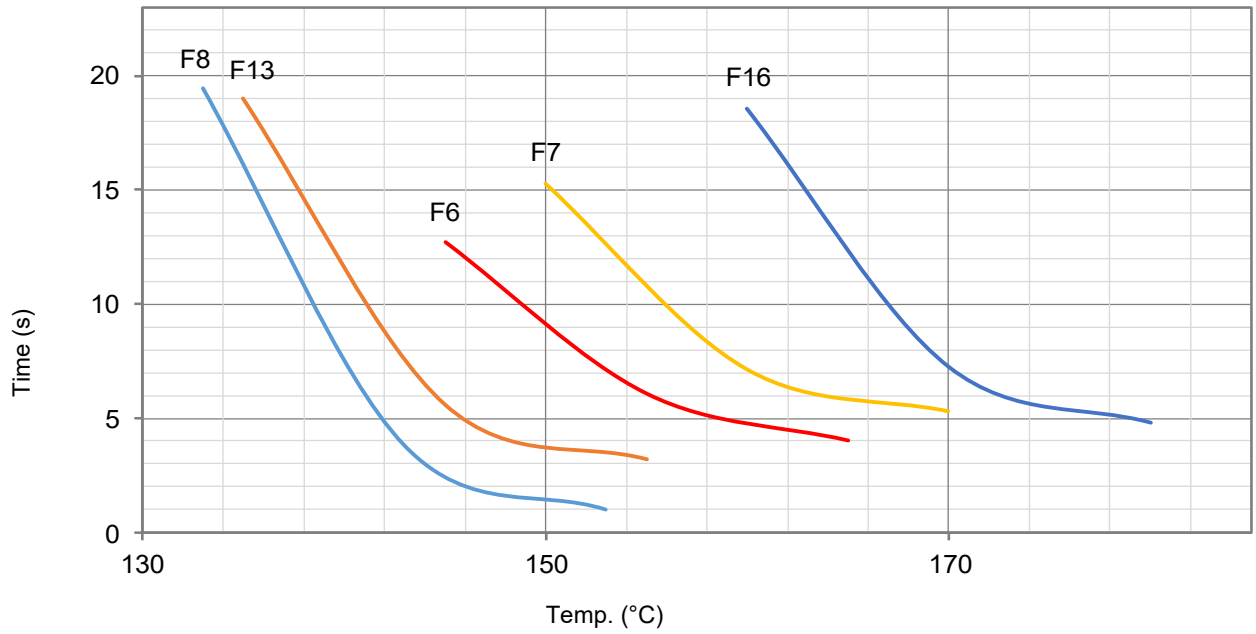

All Rights Reserved by Xiamen SET Electronics Co., Ltd. 2024-2026 V1.1

Product Current-Time Curve (Reference)

The Current-Time Curve shows functioning time at multi-times rated current at room temperature 25 ± 2 °C.

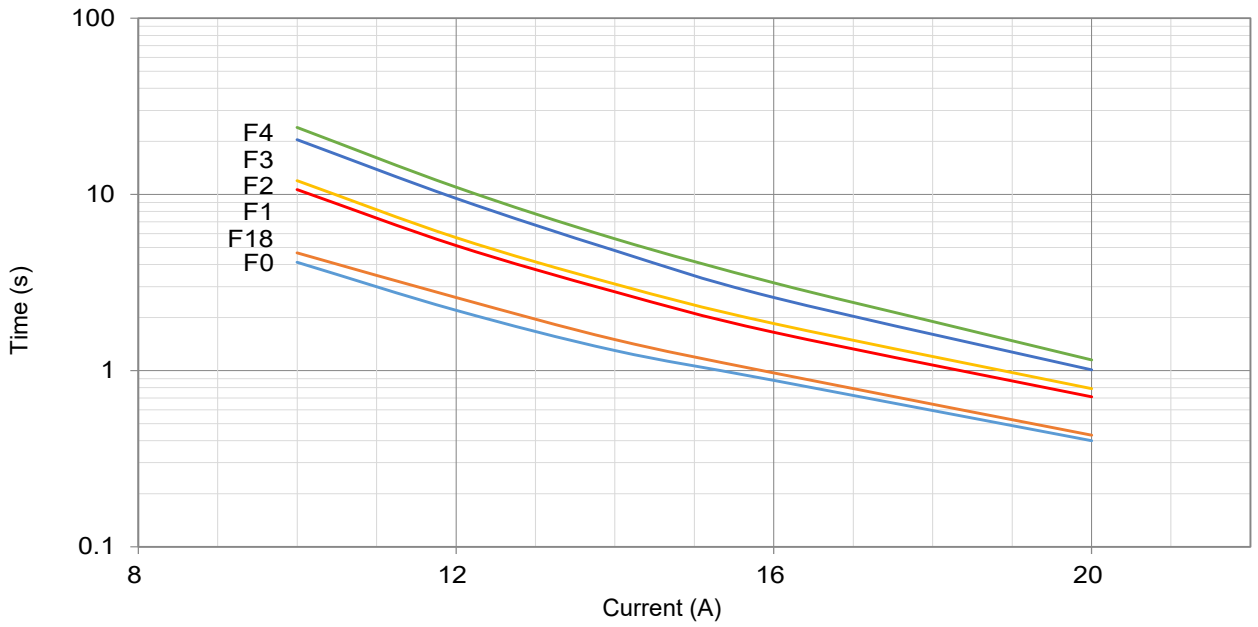

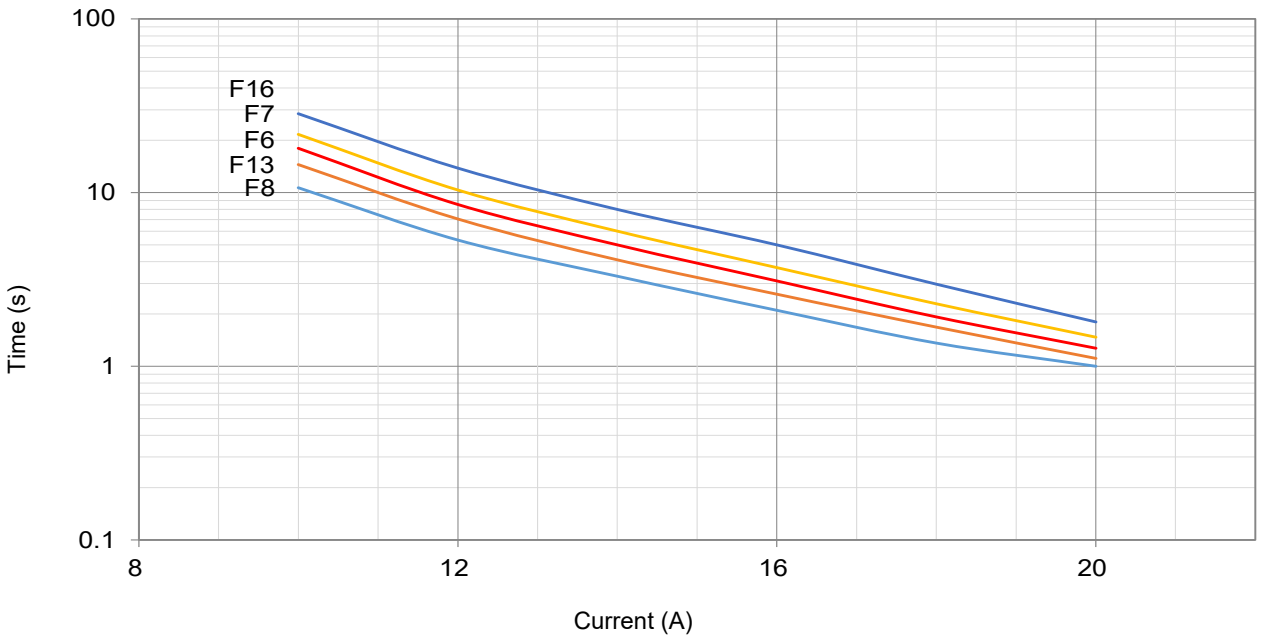

All Rights Reserved by Xiamen SET Electronics Co., Ltd. 2024-2026 V1.1

Packaging Information

Bulk

Item	Box	Carton
Dimensions (mm)	170 × 117 × 50	490 × 365 × 260
Quantity (PCS)	1000	40000
Gross Weight (kg)		14.1 ± 10%

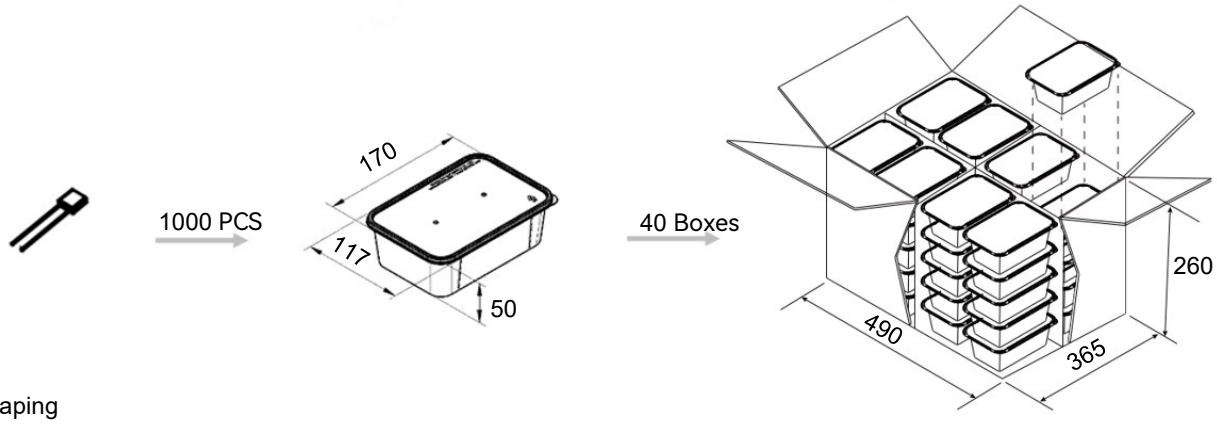

Taping

Item	Box	Carton
Dimensions (mm)	328 × 200 × 70	480 × 340 × 220
Quantity (PCS)	2000	12000
Gross Weight (kg)		5.6 ± 10%

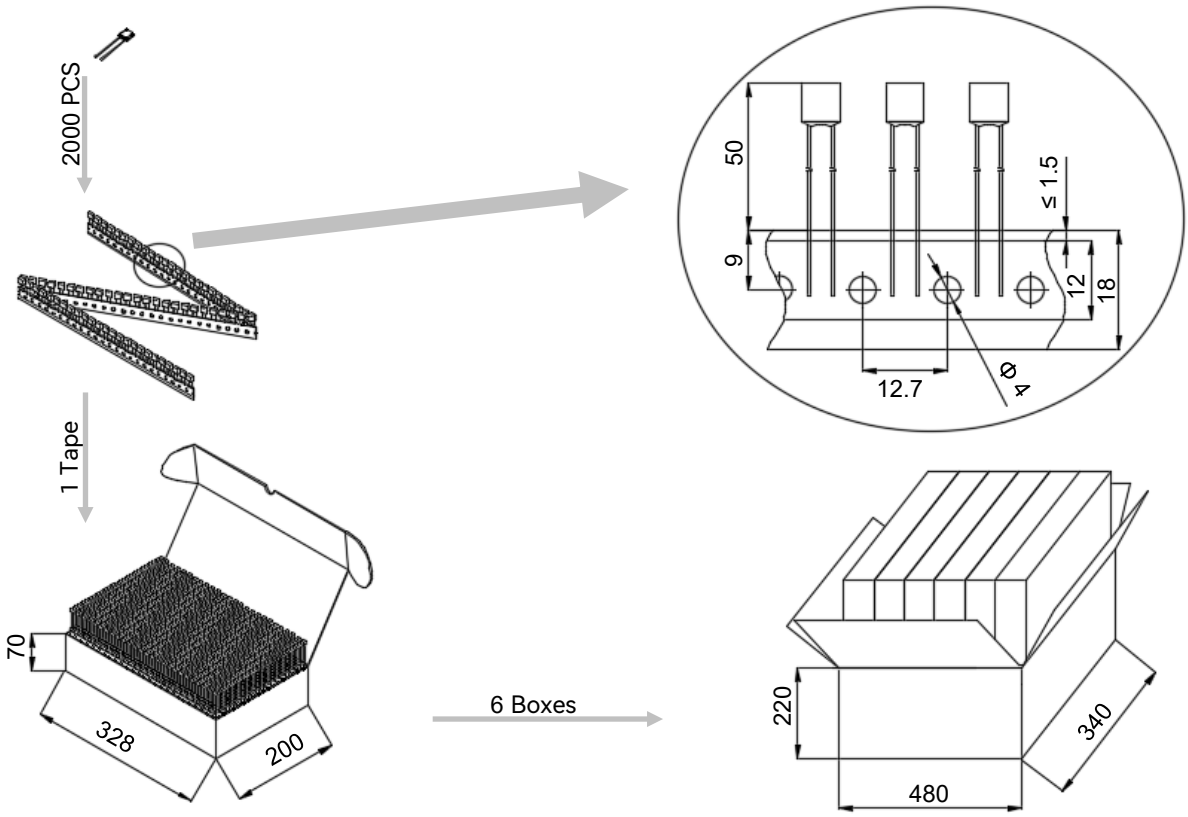

All Rights Reserved by Xiamen SET Electronics Co., Ltd. 2024-2026 V1.1

Part Numbering System

ATCO - F 2 - A N N A B - 001

Other Options

Packing

B	Bulk
T	Taping

Leads Forming

A	Straight Lead
B	Single Lead Bending
C	Leads Bending
D	Leads Kinking
E	Leads Bending and Kinking

Color of Insulation Tube

W	White
Y	Yellow
R	Red
K	Black
N	None

Insulation Tube Material

T	Teflon
P	Polyester
N	None

Lead Wire Type

A	Tinned Copper Wire
B	Tinned Copper Plated Wire

Rated Functioning Temp.

2	115 °C, See Specifications

Series

F	Series See Specifications

Product Category

ATCO	Alloy Thermal-Link

All Rights Reserved by Xiamen SET Electronics Co., Ltd. 2024-2026 V1.1

Thermal-Link (ATCO)-Alloy Type

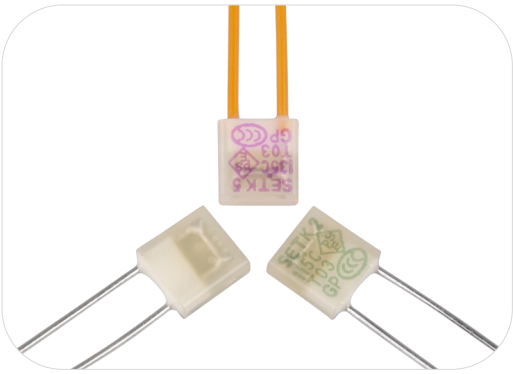

Description

Thermal-Link (ATCO)-Alloy Type is defined as a non-resettable protective device functioning one time only. It is widely used in electrical equipment. ATCO is mainly consist of fusible alloy, flux resin, case, sealant and lead wires. Normally, fusible alloy is jointed to the two lead wires. Under abnormal conditions, when the temp. reaches to the fusing temp. of ATCO, the fusible alloy melts and quickly retracts to the two lead wire ends with the aid of the flux resin and disconnects the circuit completely.

SETsafe | SETfuse Thermal-Link (ATCO)-Alloy Type K series Rated Functioning Temp. from 76 ℃ to 221 ℃, Rated Current: 2 A, 4 A, safety certification Includes UL, cUL, TUV, PSE, VDE, KC, CCC, and complies with RoHS and REACH.

Features

- Non-Resettable
- High Accuracy of Functioning Temp.
- RoHS & REACH Compliant

Applications

- Lamps
- Switched-Mode Power Supplies
- Home Electrical Appliances
- Transformers
- Motors
- Batteries

Customization

- Other Temp.
- The Length of Lead Wires
- Taping Packing Available
- Lead Wires can be Insulated
- Tinned Copper Wires or CP Wires
- Leads Forming Types

Structure Diagrams

Radial

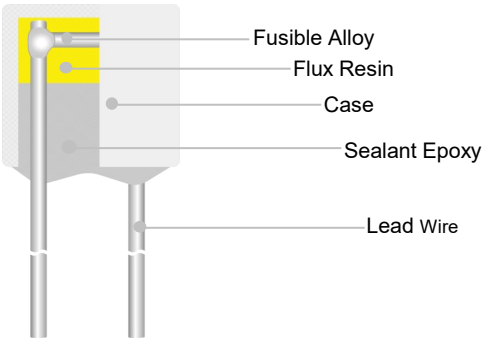

Marking

Radial (Color for reference only)

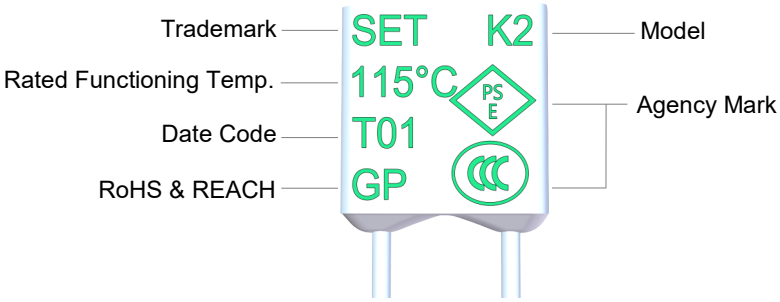

Remark: The Date Code means Year and quarter: A stands for 2000, B stands for 2001 and 01 stands for the first quarter, 02 stands for the second quarter, and so on.

Dimensions (mm)

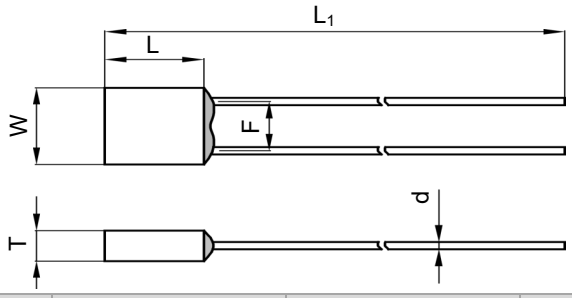

L	L_1	W	T	d	F
5.8 ± 0.5	70.0 ± 3.0	5.8 ± 0.5	2.3 ± 0.2	0.54 ± 0.05	3.7 ± 0.5

All Rights Reserved by Xiamen SET Electronics Co., Ltd. 2024-2026 V1.1

Specifications

Rated Functioning Temp. (T_f) °C

	Model	Fusing Temp. (°C)	T_h (°C)	T_m (°C)	I_r (A)	U_r (V)	UL	cUL	TUV	VDE	PSE	KC	CCC	RoHS REACH
221	K31	218 ± 2	188	250	2	AC 250	●	●	●	○	●	○	●	●
						DC *	○	○	○	○	○	○	○	●
205	K32	199 ± 3	169	250	2	AC 250	●	●	●	○	●	○	●	●
						DC *	○	○	○	○	○	○	○	●
187	K17	182 ± 3	162	250	2	AC 250	●	●	●	○	●	○	●	●
						DC 60	○	○	○	○	○	○	○	●
160	K16	154 ± 2	135	200	2	AC 250	●	●	●	○	●	○	●	●
						DC 60	○	○	○	○	○	○	○	●
150	K7	145 ± 2	126	200	2	AC 250	●	●	●	●	●	●	●	●
						DC *	○	○	○	○	○	○	○	●
145	K6	140 ± 2	121	200	2	AC 250	●	●	●	●	●	●	●	●
			100		4	DC 60	●	●	●	○	○	○	○	●
136	K9	131 ± 2	112	200	2	AC 250	●	●	●	●	●	●	●	●
			85		4	DC 60	●	●	●	○	○	○	○	●
135	K5	130 ± 2	111	200	2	AC 250	●	●	○	●	●	●	●	●
						DC *	○	○	○	○	○	○	○	●
133	K8	130 ± 2	111	200	2	AC 250	●	●	○	●	●	●	●	●
						DC *	○	○	○	○	○	○	○	●
130	K4	125 ± 2	106	200	2	AC 250	●	●	●	●	●	●	●	●
						DC *	○	○	○	○	○	○	○	●
125	K3	121 ± 2	100	200	2	AC 250	●	●	●	●	●	●	●	●
						DC 60	●	●	○	○	○	○	○	●
115	K2	111 ± 2	99(UL/cUL)/91	200	2	AC 320	●	●	○	○	○	○	○	●
						AC 250	●	●	●	●	●	●	●	●
			91			DC 60	●	●	○	○	○	○	○	●
102	K1	98 ± 3	79	200	2	AC 250	●	●	●	●	●	●	●	●
						DC 60	●	●	○	○	○	○	○	●
86	K18	81 ± 3	61	200	2	AC 250	●	●	○	●	●	●	●	●
						DC 60	●	●	○	○	○	○	○	●
76	K0	73 ± 2	53	200	2	AC 250	●	●	●	○	●	○	●	●
						DC *	○	○	○	○	○	○	○	●

Note:

1: "●"Means certificated, "○"Means non-certificated, RoHS & REACH Compliant .

2: " * "Customizable DC voltage.

All Rights Reserved by Xiamen SET Electronics Co., Ltd. 2024-2026 V1.1

Agency Information

Agency Symbol	Standards	The File No. and certification No. obtained by SETsafe | SETfuse
	UL 60691	E214712
	CAN-CSA-E60691	E214712
	EN 60691	R50161772, R50161779
	EN 60691	40017055
	J60691	JET2121-32001-2021, JET2121-32001-2022 JET2121-32001-2023, JET2121-32001-2024 JET2121-32001-2025, JET2121-32001-2026 JET2121-32001-2027, JET2121-32001-2028
	K60691	SU05023-6001A, SU05023-6002A SU05023-6003B
	GB 9816.1	2020980205000195

Soldering

Hand-Soldering

1. Soldering should be carried out according to Table K-1.
2. The thermal element of ATCO is fusible alloy with low melting point, which is jointed with ATCO lead wires. Improper soldering operation (too high soldering temp. , too long soldering time, too short lead wire etc.) may transfer more heat to the thermal element and ATCO may open in advance.
3. When soldering conditions are more severe than those listed in Table K-1, a heat sink fixture should be used between soldering point and ATCO body.
4. When soldering, please do not pull / push or twist ATCO body or lead wires.
5. After soldering, let it naturally cool for longer than 20 seconds. During cooling, never move the ATCO body or lead wires.

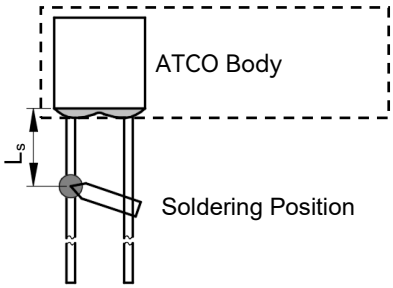

FIGURE K-1

TABLE K-1 Hand-Soldering Time

Rated Functioning Temp. (T_f)	Max. Allowable Soldering Time for Different Lead Wire Length (Fig.K-1)									Max. Soldering Temp.
	L_s Length	Time		L_s Length	Time		L_s Length	Time		
		Tinned Copper Wire	CP Wire		Tinned Copper Wire	CP Wire		Tinned Copper Wire	CP Wire	
(°C)	(mm)	(s)	(s)	(mm)	(s)	(s)	(mm)	(s)	(s)	(°C)
76 to 101	10	1[a]	4	20	2	5	30	3	6	400
102 to 115	10	1[a]	4	20	2	5	30	3	6	
116 to 135	10	1[a]	4	20	3	6	30	5	8	
136 to 150	10	3	6	20	5	8	30	5	8	
151 to 221	10	4	7	20	6	9	30	7	10	

Note:
a: Auxiliary Heat Sink Fixture is Required to Avoid ATCO Cutting off Unexpectedly.

All Rights Reserved by Xiamen SET Electronics Co., Ltd. 2024-2026 V1.1

Wave Soldering

The wave soldering parameters as Table K-2, for reference only, when ATCO is for practice use, you need to do some validation experiments. For example, using X-RAY to see the fusible alloy of ATCO whether damage after wave soldering.

TABLE K-2 Wave Soldering Parameters Setting

Rated Functioning Temp. (T_f)	Max. Allowable Preheating Temp. When the Length of Lead Wire is Different (Fig.K-1)				Preheating Time (t_1)	Max. Wave Soldering Temp.	Dwelling Time (t_2)	Cooling Time (t_3)
	L_s Length	Preheating Temp.	L_s Length	Preheating Temp.				
(°C)	(mm)	(°C)	(mm)	(°C)	(s)	(°C)	(s)	(s)
76 to 130	Recommend Hand-Soldering							
131 to 150	20	80	30	90	< 60	≤ 260	≤ 3	≤ 10
151 to 221	20	90	30	100	< 60	≤ 260	≤ 3	≤ 10

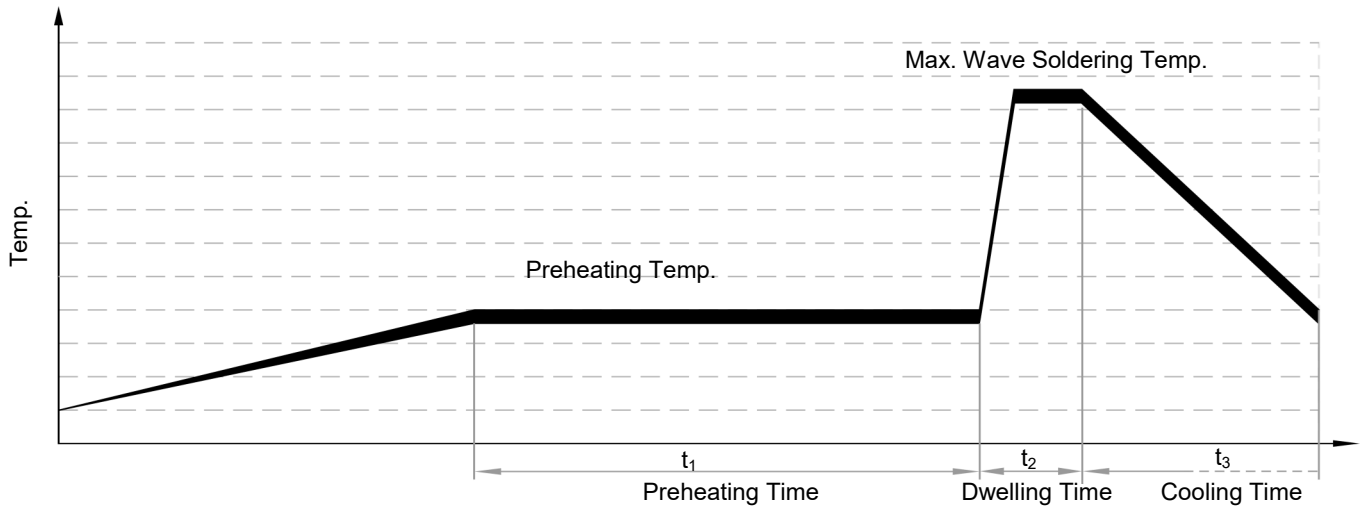

All Rights Reserved by Xiamen SET Electronics Co., Ltd. 2024-2026 V1.1

Product Temp.-Time Curve (Reference)

The Temp.-Time Curve of Thermal-Link in different temp. oil bath.

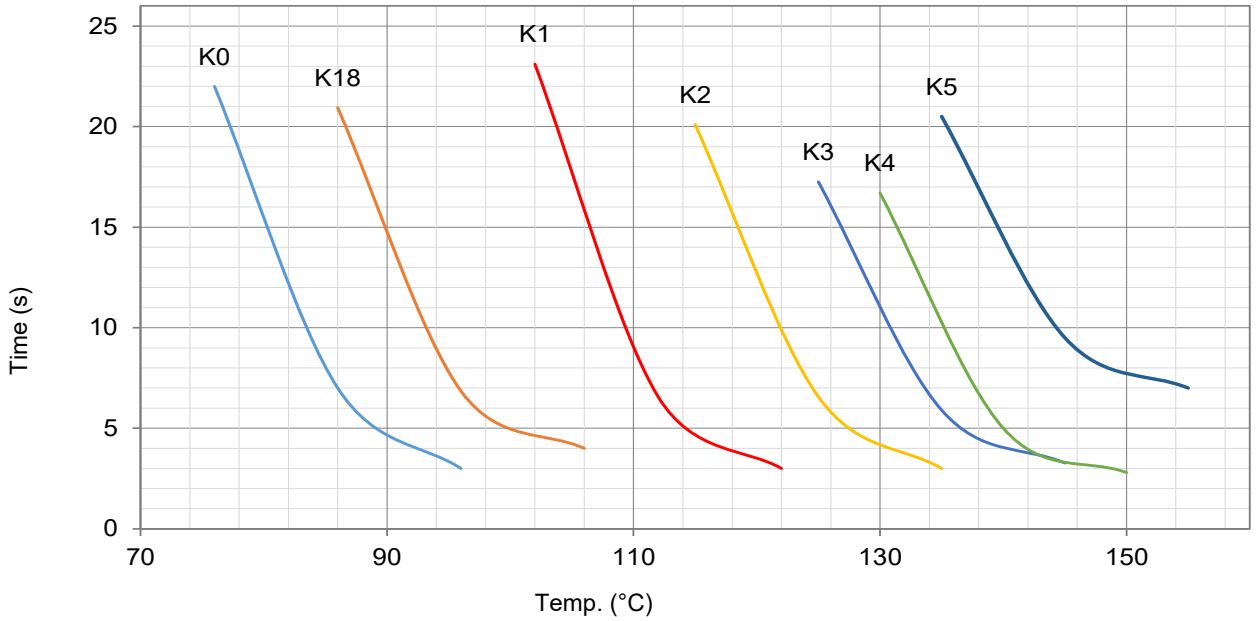

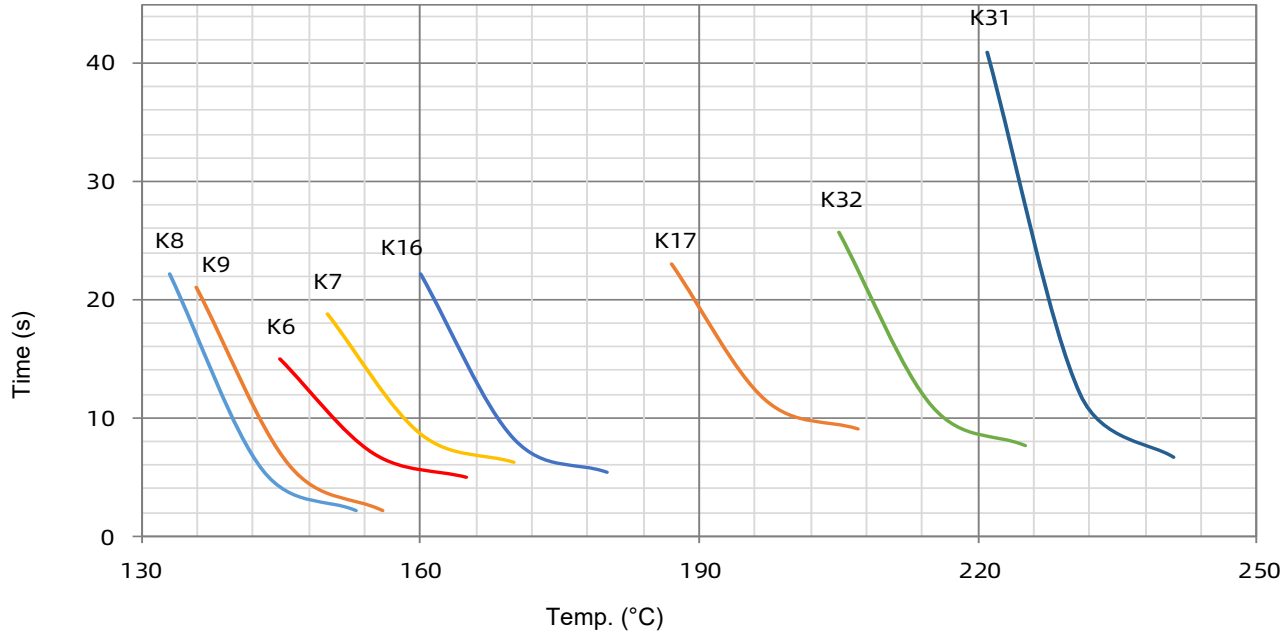

All Rights Reserved by Xiamen SET Electronics Co., Ltd. 2024-2026 V1.1

Product Current-Time Curve (Reference)

The Current-Time Curve shows functioning time at multi-times rated current at room temperature 25 ± 2 °C.

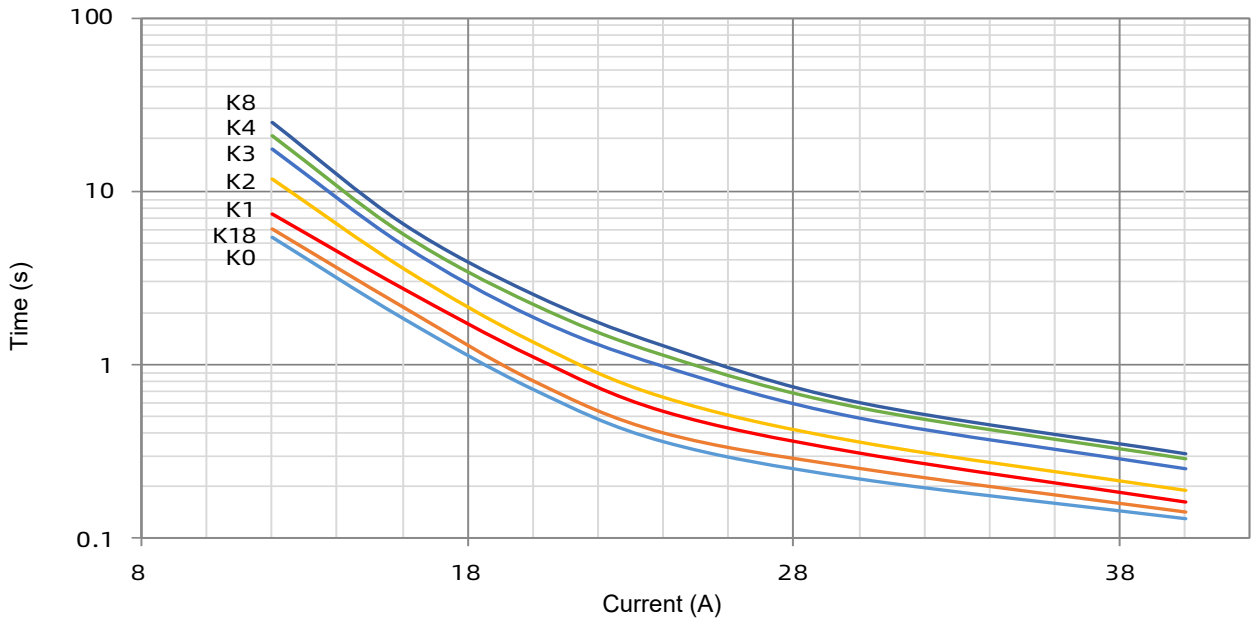

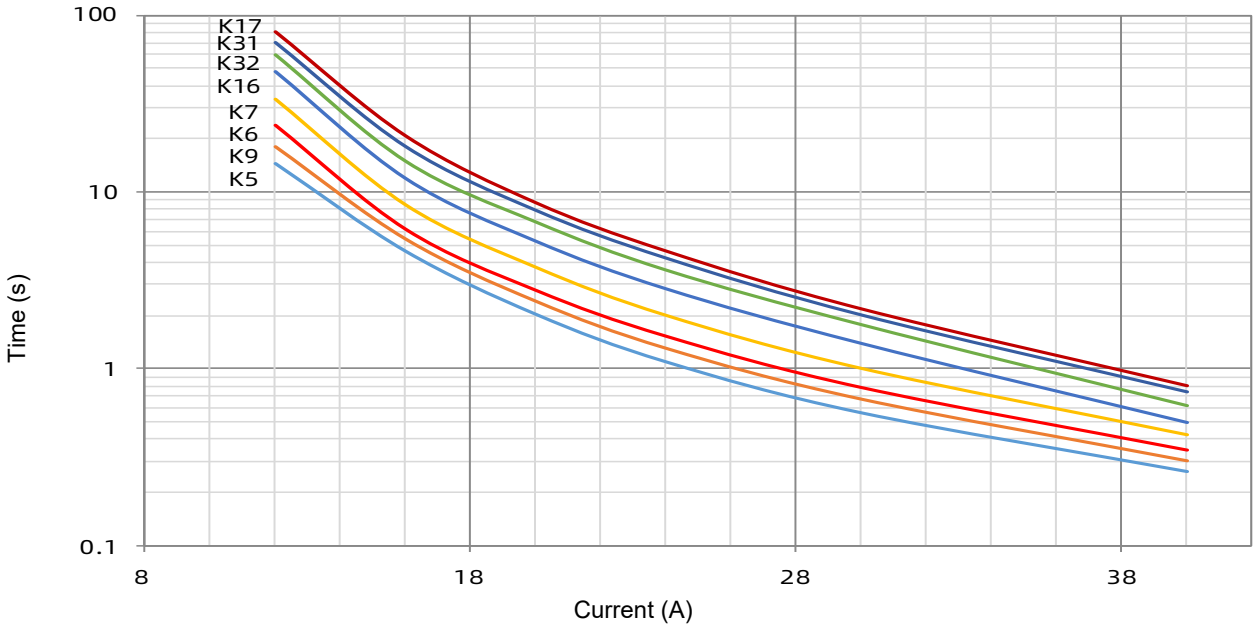

All Rights Reserved by Xiamen SET Electronics Co., Ltd. 2024-2026 V1.1

Packaging Information

Bulk

Item	Box	Carton
Dimensions (mm)	170 × 117 × 50	490 × 365 × 260
Quantity (PCS)	1000	40000
Gross Weight (kg)		16.1 ± 10%

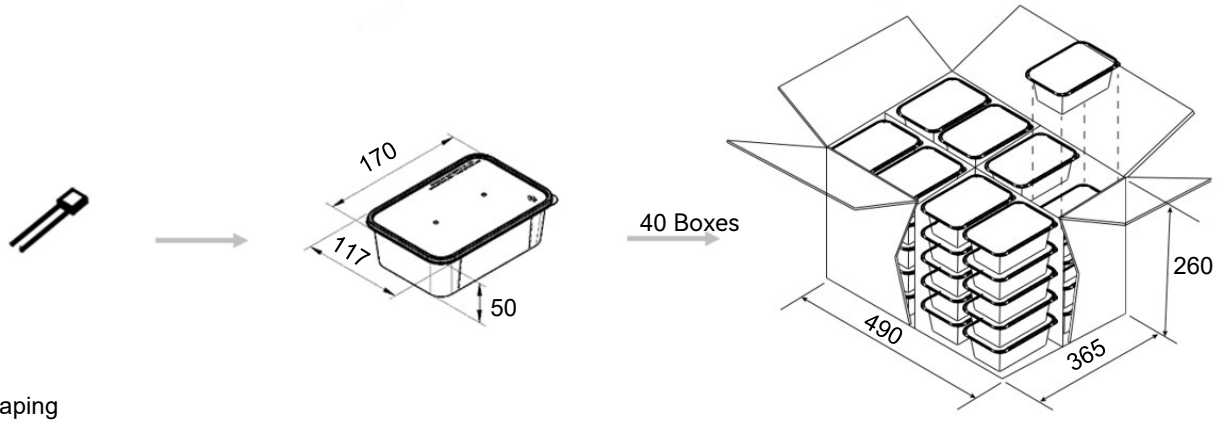

Taping

Item	Box	Carton
Dimensions (mm)	328 × 200 × 70	480 × 340 × 220
Quantity (PCS)	2000	12000
Gross Weight (kg)		6 ± 10%

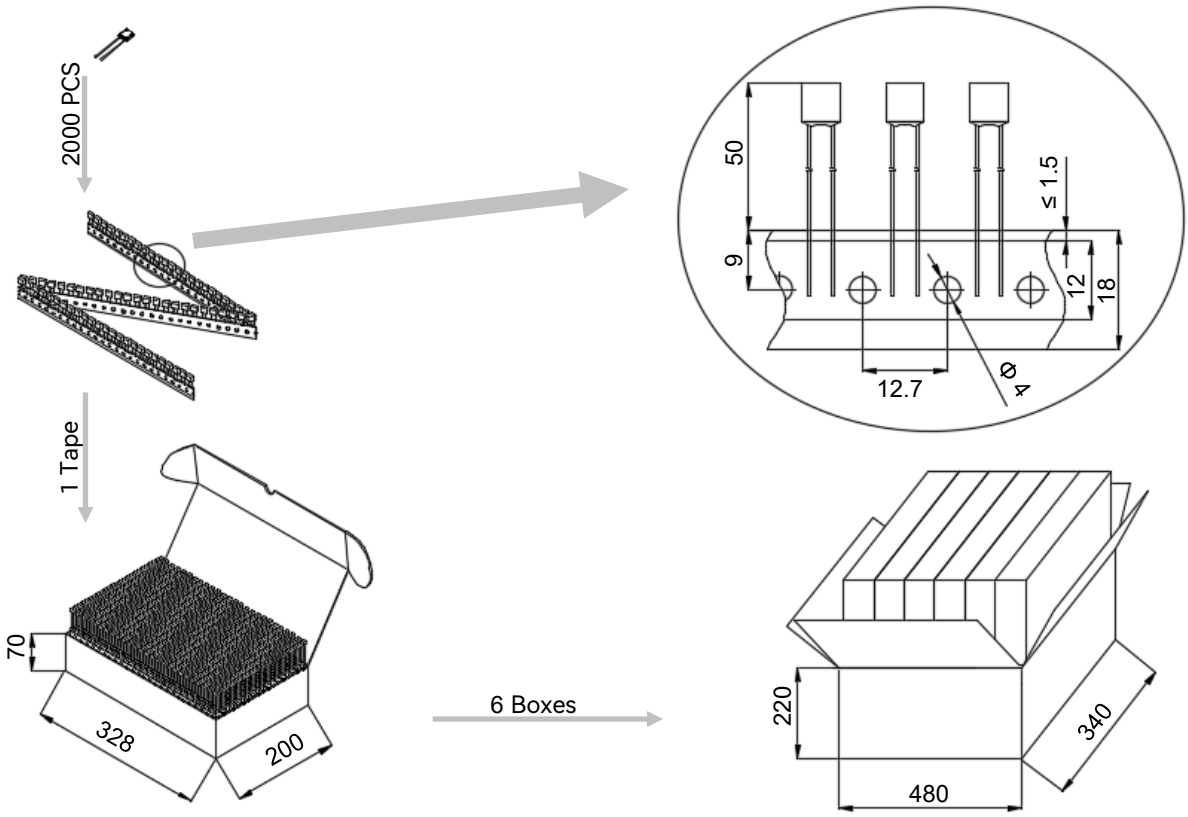

All Rights Reserved by Xiamen SET Electronics Co., Ltd. 2024-2026 V1.1

Part Numbering System

ATCO - K 2 - A N N A B - 001

Other Options

Packing

B	Bulk
T	Taping

Leads Forming

A	Straight Lead
B	Single Lead Bending
C	Leads Bending
D	Leads Kinking
E	Leads Bending and Kinking

Color of Insulation Tube

W	White
Y	Yellow
R	Red
K	Black
N	None

Insulation Tube Material

T	Teflon
P	Polyester
N	None

Lead Wire Type

A	Tinned Copper Wire
B	Tinned Copper Plated Wire

Rated Functioning Temp.

2	115 °C, See Specifications

Series

K	Series See Specifications

Product Category

ATCO	Alloy Thermal-Link

All Rights Reserved by Xiamen SET Electronics Co., Ltd. 2024-2026 V1.1

Thermal-Link (ATCO)-Alloy Type

KG Series

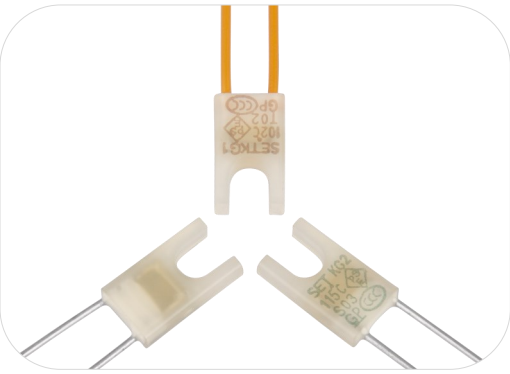

Description

Thermal-Link (ATCO)-Alloy Type is defined as a non-resettable protective device functioning one time only. It is widely used in electrical equipment. ATCO is mainly consist of fusible alloy, flux resin, case, sealant and lead wires. Normally, fusible alloy is jointed to the two lead wires. Under abnormal conditions, when the temp. reaches to the fusing temp. of ATCO, the fusible alloy melts and quickly retracts to the two lead wire ends with the aid of the flux resin and disconnects the circuit completely.

SETsafe | SETfuse Thermal-Link (ATCO)-Alloy Type KG series Rated Functioning Temp. from 76 ℃ to 221 ℃, Rated Current: 2 A, safety certification Includes UL, cUL, TUV, PSE, CCC, and complies with RoHS and REACH.

Features

- Non-Resettable
- High Accuracy of Functioning Temp.
- RoHS & REACH Compliant

Applications

- Lamps
- Switched-Mode Power Supplies
- Home Electrical Appliances
- Transformers
- Motors
- Batteries

Customization

- Other Temp.
- The Length of Lead Wires
- Taping Packing Available
- Lead Wires can be Insulated
- Tinned Copper Wires or CP Wires
- Leads Forming Types

Structure Diagrams

Radial

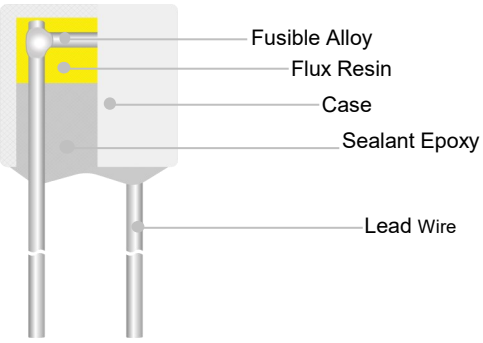

Marking

Radial (Color for reference only)

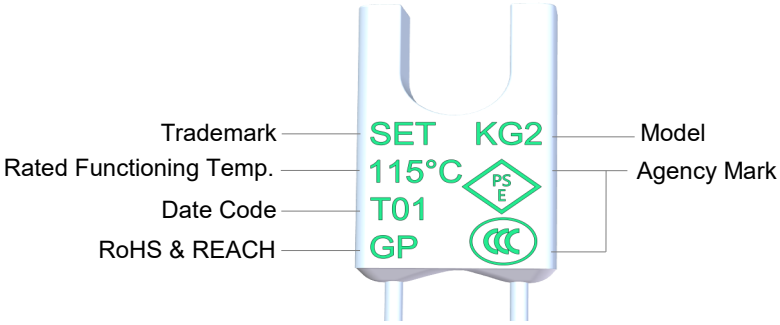

Remark: The Date Code means Year and quarter: A stands for 2000, B stands for 2001 and 01 stands for the first quarter, 02 stands for the second quarter, and so on.

Dimensions (mm)

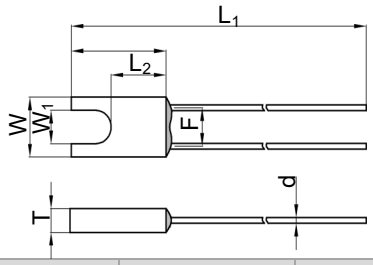

L	L_1	L_2	W	W_1	T	d	F
10.0 ± 0.5	74.0 ± 3.0	5.8 ± 0.5	5.8 ± 0.5	3.2 ± 0.5	2.3 ± 0.2	0.54 ± 0.05	3.7 ± 0.5

All Rights Reserved by Xiamen SET Electronics Co., Ltd. 2024-2026 V1.1

Specifications

Rated Functioning Temp. (T_f) °C

	Model	Fusing Temp. (°C)	T_h (°C)	T_m (°C)	I_r (A)	U_r (V)	UL	cUL	TUV	PSE	CCC	RoHS REACH
221	KG31	218 ± 2	188	250	2	AC 250	●	●	●	●	○	●
						DC *	○	○	○	○	○	●
205	KG32	199 ± 3	169	250	2	AC 250	●	●	●	●	○	●
						DC *	○	○	○	○	○	●
160	KG16	154 ± 2	135	200	2	AC 250	○	○	●	●	●	●
						DC *	○	○	○	○	○	●
150	KG7	145 ± 2	126	200	2	AC 250	●	●	●	●	●	●
						DC *	○	○	○	○	○	●
145	KG6	140 ± 2	121	200	2	AC 250	●	●	●	●	●	●
						DC *	○	○	○	○	○	●
136	KG9	131 ± 2	112	200	2	AC 250	●	●	●	●	●	●
						DC *	○	○	○	○	○	●
135	KG5	130 ± 2	111	200	2	AC 250	●	●	●	●	●	●
						DC *	○	○	○	○	○	●
133	KG8	130 ± 2	111	200	2	AC 250	●	●	●	●	●	●
						DC *	○	○	○	○	○	●
130	KG4	125 ± 2	106	200	2	AC 250	●	●	●	●	●	●
						DC *	○	○	○	○	○	●
125	KG3	121 ± 2	100	200	2	AC 250	●	●	●	●	●	●
						DC 60	●	●	○	○	○	●
115	KG2	111 ± 2	91	200	2	AC 250	●	●	●	●	●	●
						DC 60	●	●	○	○	○	●
102	KG1	98 ± 3	79	200	2	AC 250	●	●	●	●	●	●
						DC 60	●	●	○	○	○	●
86	KG18	81 ± 3	61	200	2	AC 250	●	●	●	●	●	●
						DC 60	●	●	○	○	○	●
76	KG0	73 ± 2	53	200	2	AC 250	●	●	●	●	●	●
						DC *	○	○	○	○	○	●

Note:

1: "●"Means certificated, "○"Means non-certificated, RoHS & REACH Compliant .

2: " * "Customizable DC voltage.

All Rights Reserved by Xiamen SET Electronics Co., Ltd. 2024-2026 V1.1

Agency Information

Agency Symbol	Standards	The File No. and certification No. obtained by SETsafe | SETfuse
	UL 60691	E214712
	CAN-CSA-E60691	E214712
	EN 60691	R50384415
	J60691	JET2121-32001-2021、JET2121-32001-2022 JET2121-32001-2023、JET2121-32001-2024 JET2121-32001-2025、JET2121-32001-2026 JET2121-32001-2027、JET2121-32001-2028
	GB 9816.1	2020980205000195

Soldering

Hand-Soldering

1. Soldering should be carried out according to Table KG-1.
2. The thermal element of ATCO is fusible alloy with low melting point, which is jointed with ATCO lead wires. Improper soldering operation (too high soldering temp. , too long soldering time, too short lead wire etc.) may transfer more heat to the thermal element and ATCO may open in advance.
3. When soldering conditions are more severe than those listed in Table KG-1, a heat sink fixture should be used between soldering point and ATCO body.
4. When soldering, please do not pull / push or twist ATCO body or lead wires.
5. After soldering, let it naturally cool for longer than 20 seconds. During cooling, never move the ATCO body or lead wires.

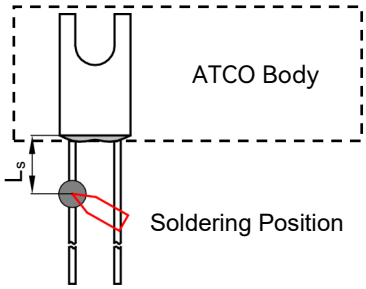

FIGURE KG-1

TABLE KG-1 Hand-Soldering Time

Rated Functioning Temp. (T_f)	Max. Allowable Soldering Time for Different Lead Wire Length (Fig.KG-1)									Max. Soldering Temp.
	L_s Length	Time		L_s Length	Time		L_s Length	Time		
		Tinned Copper Wire	CP Wire		Tinned Copper Wire	CP Wire		Tinned Copper Wire	CP Wire	
(°C)	(mm)	(s)	(s)	(mm)	(s)	(s)	(mm)	(s)	(s)	(°C)
76 to 101	10	1[a]	4	20	2	5	30	3	6	400
102 to 115	10	1[a]	4	20	2	5	30	3	6	
116 to 135	10	1[a]	4	20	3	6	30	5	8	
136 to 150	10	3	6	20	5	8	30	5	8	
151 to 221	10	4	7	20	6	9	30	7	10	

Note:
a: Auxiliary Heat Sink Fixture is Required to Avoid ATCO Cutting off Unexpectedly.

All Rights Reserved by Xiamen SET Electronics Co., Ltd. 2024-2026 V1.1

Wave Soldering

The wave soldering parameters as Table KG-2, for reference only, when ATCO is for practice use, you need to do some validation experiments. For example, using X-RAY to see the fusible alloy of ATCO whether damage after wave soldering.

TABLE KG-2 Wave Soldering Parameters Setting

Rated Functioning Temp. (T_f)	Max. Allowable Preheating Temp. When the Length of Lead Wire is Different (Fig.KG-1)				Preheating Time (t_1)	Max. Wave Soldering Temp.	Dwelling Time (t_2)	Cooling Time (t_3)
	L_s Length	Preheating Temp.	L_s Length	Preheating Temp.				
(°C)	(mm)	(°C)	(mm)	(°C)	(s)	(°C)	(s)	(s)
76 to 130	Recommend Hand-Soldering							
131 to 150	20	80	30	90	< 60	≤ 260	≤ 3	≤ 10
151 to 221	20	90	30	100	< 60	≤ 260	≤ 3	≤ 10

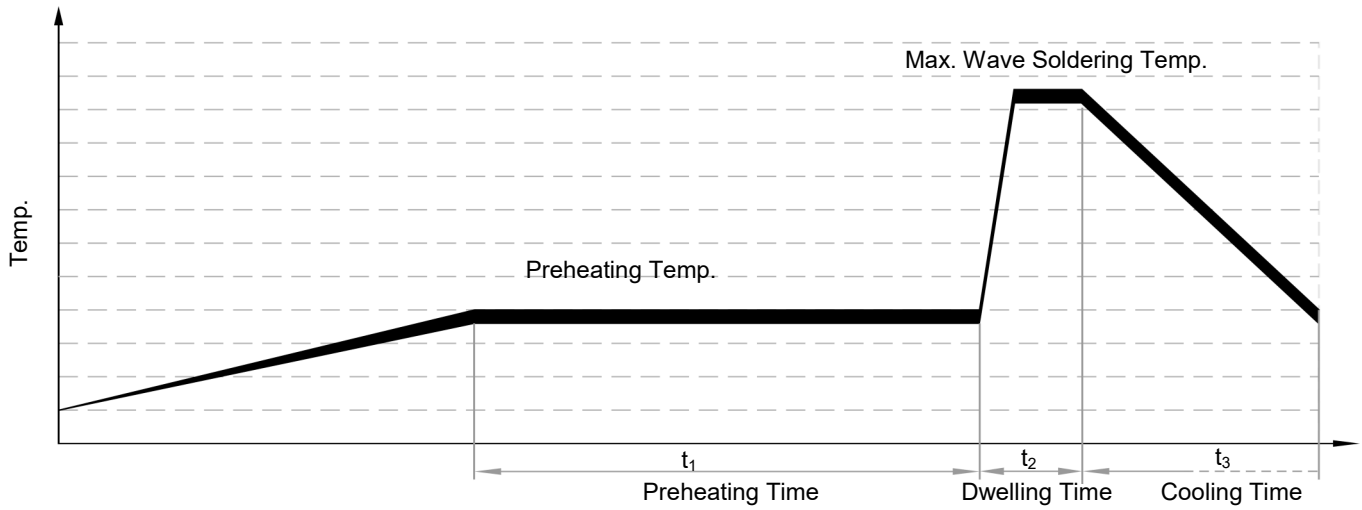

All Rights Reserved by Xiamen SET Electronics Co., Ltd. 2024-2026 V1.1

Product Temp.-Time Curve (Reference)

The Temp.-Time Curve of Thermal-Link in different temp. oil bath.

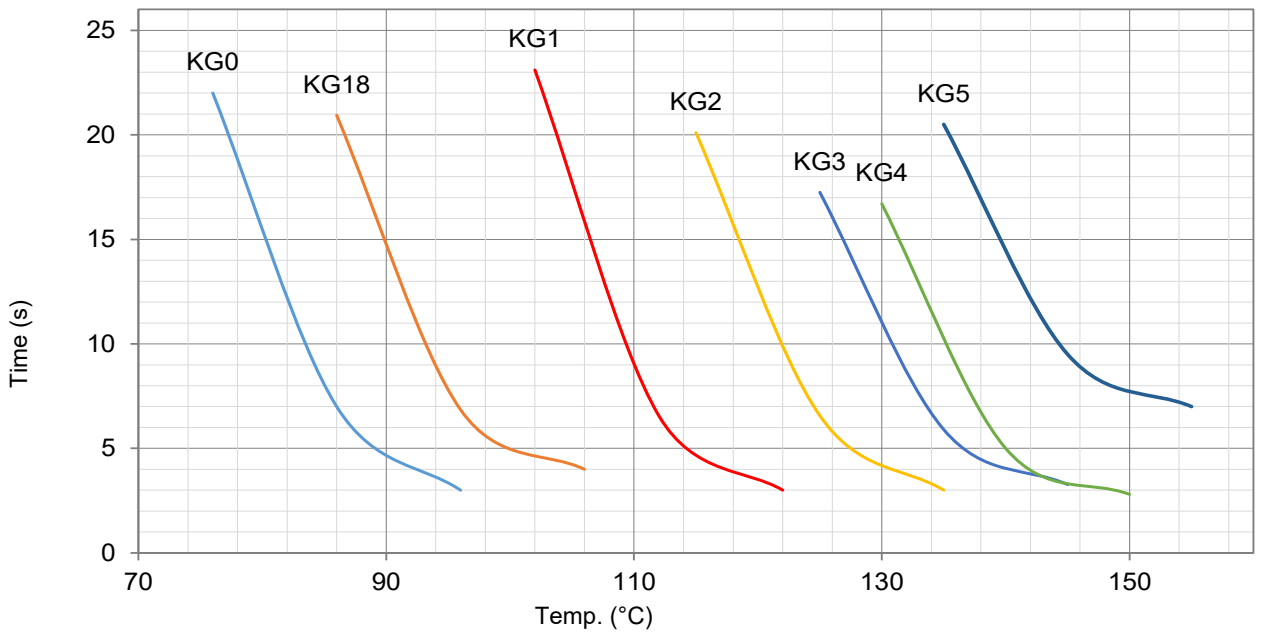

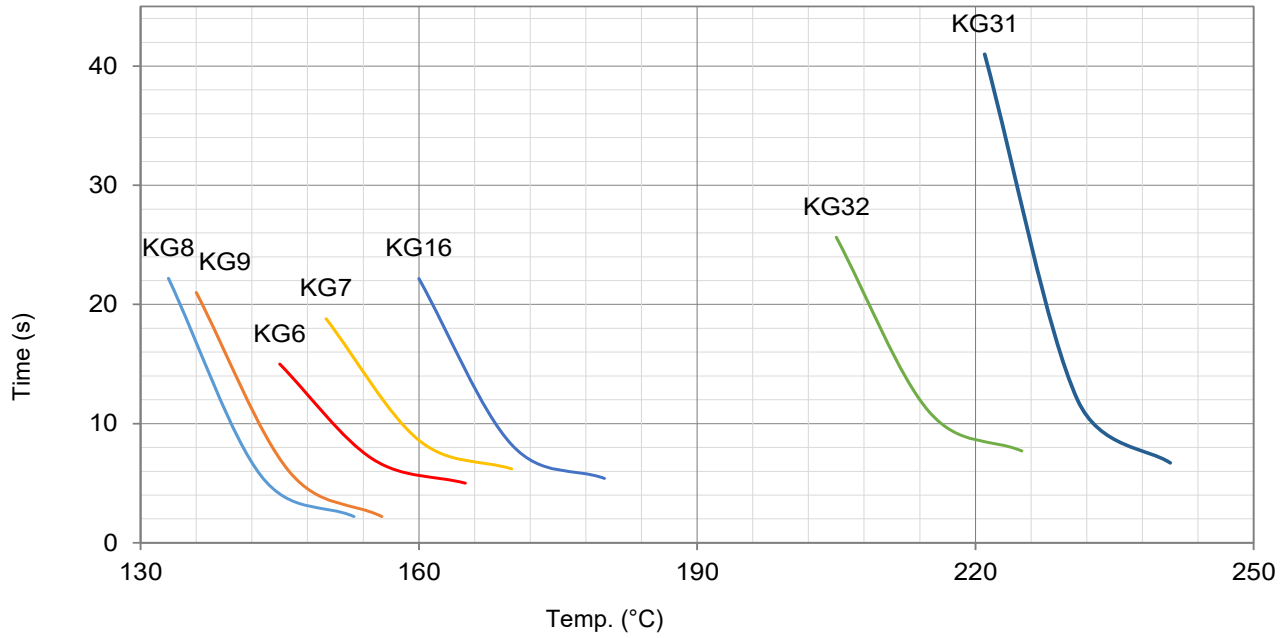

All Rights Reserved by Xiamen SET Electronics Co., Ltd. 2024-2026 V1.1

Product Current-Time Curve (Reference)

The Current-Time Curve shows functioning time at multi-times rated current at room temperature 25 ± 2 °C.

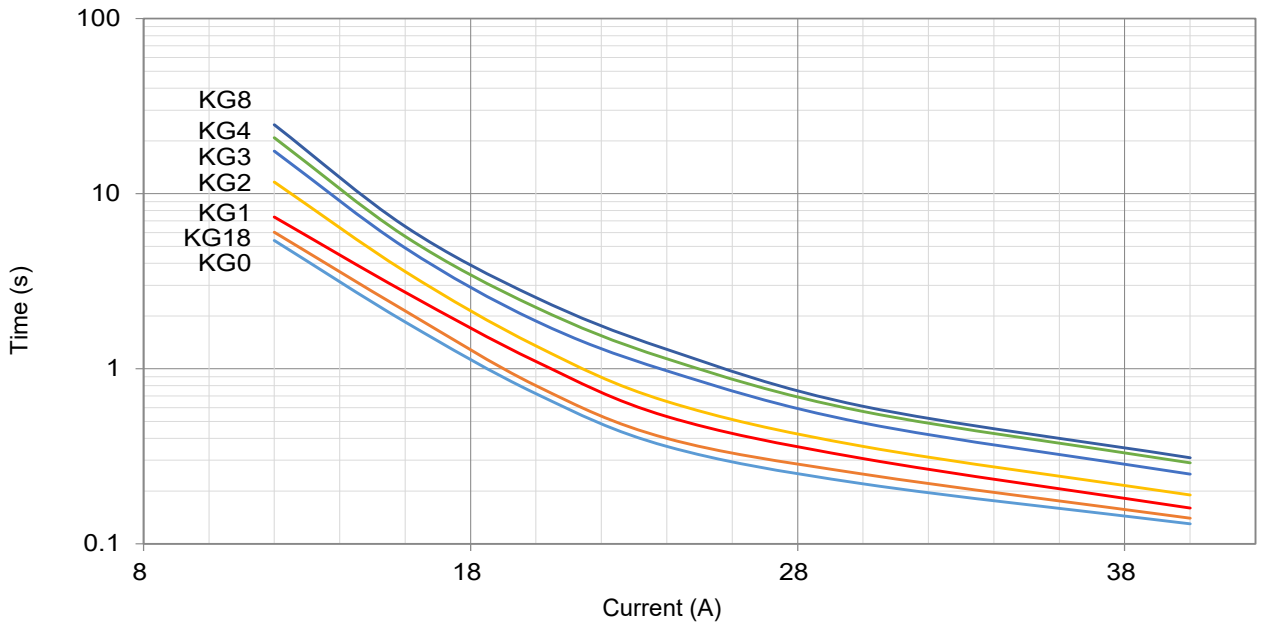

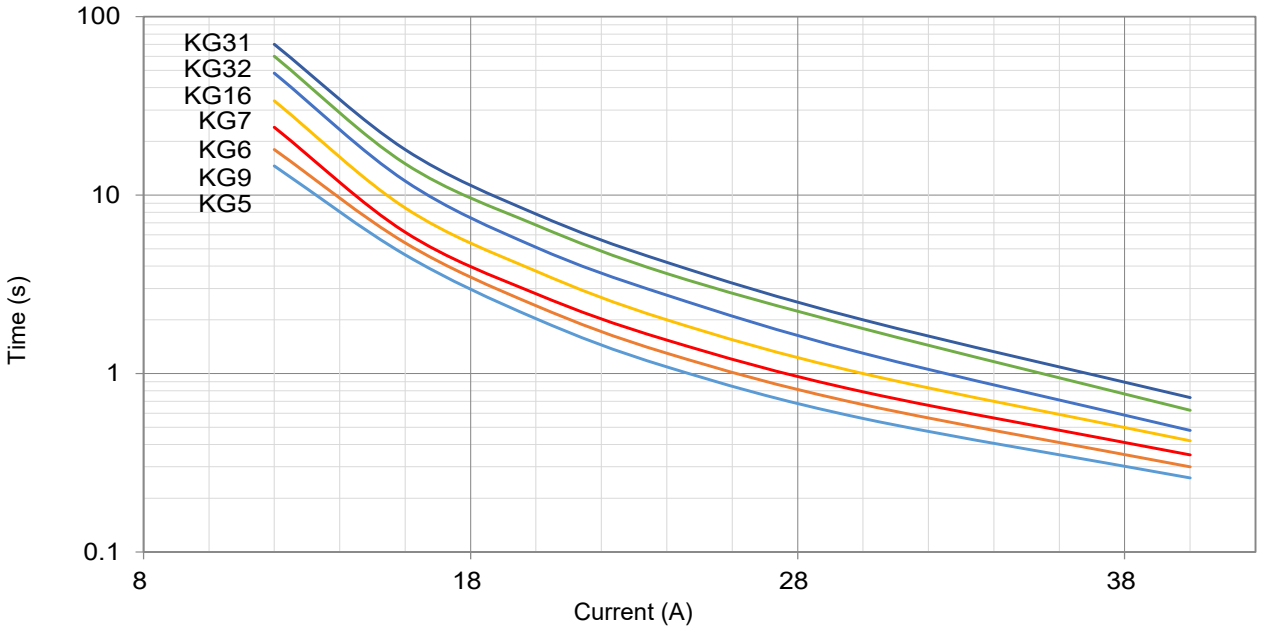

All Rights Reserved by Xiamen SET Electronics Co., Ltd. 2024-2026 V1.1

Packaging Information

Bulk

Item	Box	Carton
Dimensions (mm)	170 × 117 × 50	490 × 365 × 260
Quantity (PCS)	700	28000
Gross Weight (kg)		12.8 ± 10%

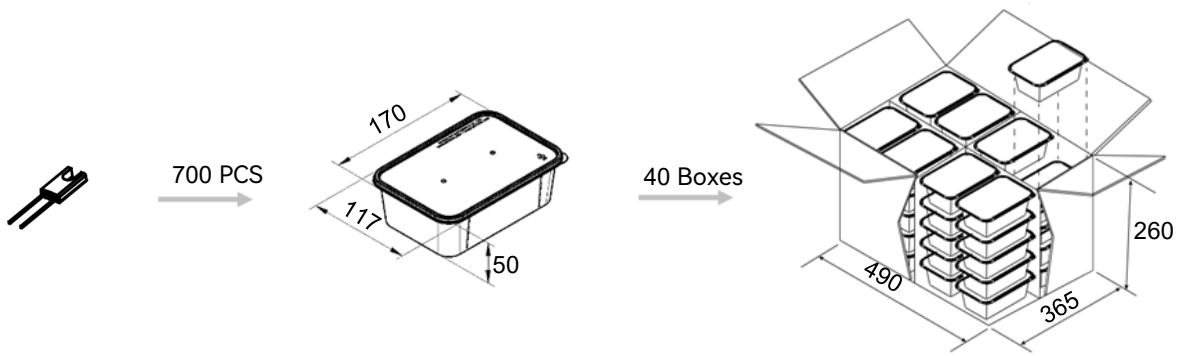

Taping

Item	Box	Carton
Dimensions (mm)	328 × 200 × 70	480 × 340 × 220
Quantity (PCS)	2000	12000
Gross Weight (kg)		6 ± 10%

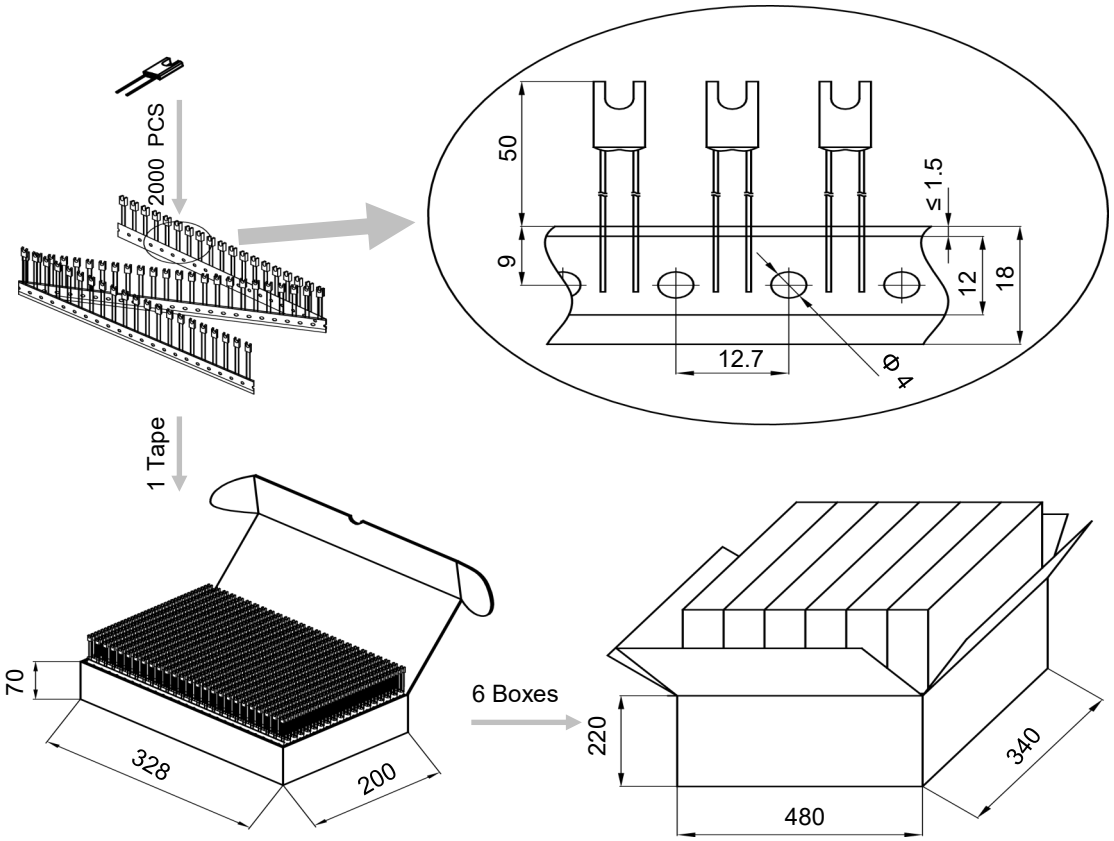

All Rights Reserved by Xiamen SET Electronics Co., Ltd. 2024-2026 V1.1

Part Numbering System

ATCO - KG 2 - A N N A B - 001

Other Options

Packing

B	Bulk
T	Taping

Leads Forming

A	Straight Lead
B	Single Lead Bending
C	Leads Bending
D	Leads Kinking
E	Leads Bending and Kinking

Color of Insulation Tube

W	White
Y	Yellow
R	Red
K	Black
N	None

Insulation Tube Material

T	Teflon
P	Polyester
N	None

Lead Wire Type

A	Tinned Copper Wire
B	Tinned Copper Plated Wire

Rated Functioning Temp.

2	115 °C, See Specifications

Series

KG	Series See Specifications

Product Category

ATCO	Alloy Thermal-Link

All Rights Reserved by Xiamen SET Electronics Co., Ltd. 2024-2026 V1.1

Thermal-Link (ATCO)-Alloy Type

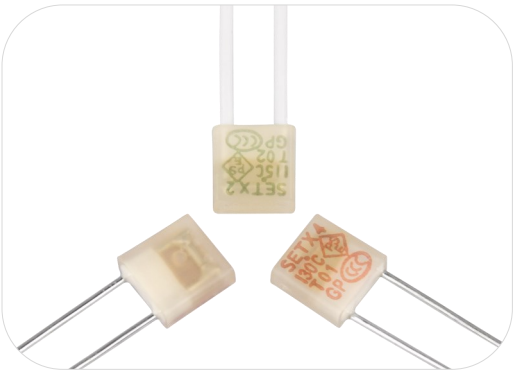

Description

Thermal-Link (ATCO)-Alloy Type is defined as a non-resettable protective device functioning one time only. It is widely used in electrical equipment. ATCO is mainly consist of fusible alloy, flux resin, case, sealant and lead wires. Normally, fusible alloy is jointed to the two lead wires. Under abnormal conditions, when the temp. reaches to the fusing temp. of ATCO, the fusible alloy melts and quickly retracts to the two lead wire ends with the aid of the flux resin and disconnects the circuit completely.

SETsafe | SETfuse Thermal-Link (ATCO)-Alloy Type X series Rated Functioning Temp. from 76 ℃ to 221 ℃, Rated Current: 3 A, 4 A, safety certification Includes UL, cUL, TUV, PSE, VDE, KC, CCC, and complies with RoHS and REACH.

Features

- Non-Resettable
- High Accuracy of Functioning Temp.
- RoHS & REACH Compliant

Applications

- Lamps
- Switched-Mode Power Supplies
- Home Electrical Appliances
- Transformers
- Motors
- Batteries

Customization

- Other Temp.
- The Length of Lead Wires
- Taping Packing Available
- Lead Wires can be Insulated
- Tinned Copper Wires or CP Wires
- Leads Forming Types

Structure Diagrams

Radial

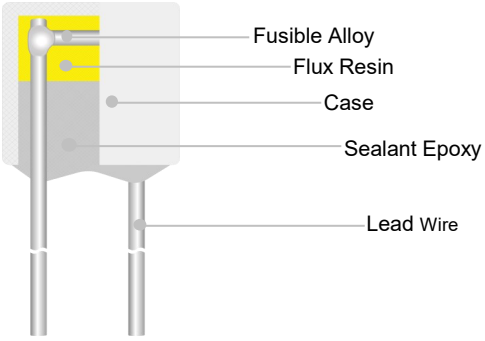

Marking

Radial (Color for reference only)

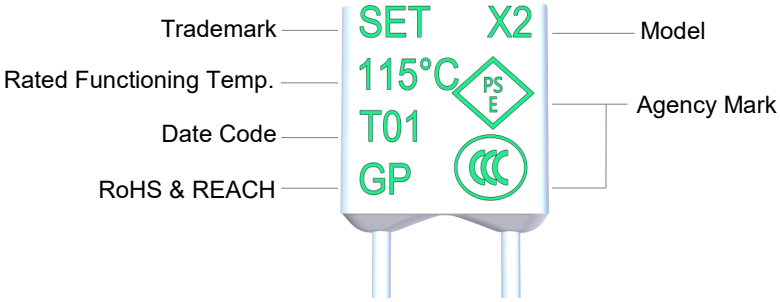

Remark: The Date Code means Year and quarter: A stands for 2000, B stands for 2001 and 01 stands for the first quarter, 02 stands for the second quarter, and so on.

Dimensions (mm)

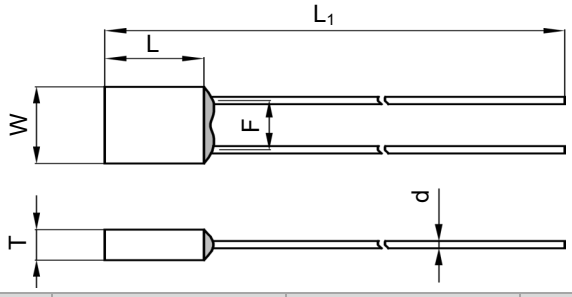

L	L_1	W	T	d	F
5.8 ± 0.5	70.0 ± 3.0	5.8 ± 0.5	2.3 ± 0.2	0.54 ± 0.05	3.7 ± 0.5

All Rights Reserved by Xiamen SET Electronics Co., Ltd. 2024-2026 V1.1

Specifications

Rated Functioning Temp. (T_f) °C

	Model	Fusing Temp. (°C)	T_h (°C)	T_m (°C)	I_r (A)	U_r (V)	UL	cUL	TUV	VDE	PSE	KC	CCC	RoHS REACH
221	X31	218 ± 2	188	250	3	AC 250	●	●	●	○	●	○	●	●
						DC *	○	○	○	○	○	○	○	●
205	X32	199 ± 3	169	250	3	AC 250	●	●	●	○	●	○	●	●
						DC *	○	○	○	○	○	○	○	●
187	X17	182 ± 3	162	250	3	AC 250	●	●	●	○	●	○	●	●
						DC 60	○	○	○	○	○	○	○	●
160	X16	154 ± 2	135	200	3	AC 250	●	●	●	○	●	○	●	●
						DC 60	○	○	○	○	○	○	○	●
150	X7	145 ± 2	126	200	3	AC 250	●	●	○	●	●	●	●	●
						DC *	○	○	○	○	○	○	○	●
145	X6	140 ± 2	121	200	3	AC 250	●	●	○	●	●	●	●	●
			105		4	DC 60	●	●	○	○	○	○	○	●
136	X9	131 ± 2	112	200	3	AC 250	●	●	○	●	●	●	●	●
			90		4	DC 60	●	●	○	○	○	○	○	●
135	X5	130 ± 2	111	200	3	AC 250	●	●	○	●	●	●	●	●
						DC *	○	○	○	○	○	○	○	●
133	X8	130 ± 2	111	200	3	AC 250	●	●	○	●	●	●	●	●
						DC *	○	○	○	○	○	○	○	●
130	X4	125 ± 2	106	200	3	AC 250	●	●	○	●	●	●	●	●
						DC *	○	○	○	○	○	○	○	●
125	X3	121 ± 2	100	200	3	AC 250	●	●	○	●	●	●	●	●
						DC 60	●	●	○	○	○	○	○	●
115	X2	111 ± 2	99(UL/cUL)/91	200	3	AC 320	●	●	○	○	○	○	○	●
						AC 250	●	●	○	●	●	●	●	●
			91			DC 60	●	●	○	○	○	○	○	●
102	X1	98 ± 3	79	200	3	AC 250	●	●	○	●	●	●	●	●
						DC 60	●	●	○	○	○	○	○	●
86	X18	81 ± 3	61	200	3	AC 250	●	●	○	●	●	●	●	●
						DC 60	●	●	○	○	○	○	○	●
76	X0	73 ± 2	53	200	3	AC 250	●	●	●	○	●	○	●	●
						DC *	○	○	○	○	○	○	○	●

Note:

1: "●"Means certificated, "○"Means non-certificated, RoHS & REACH Compliant .

2: " * "Customizable DC voltage..

All Rights Reserved by Xiamen SET Electronics Co., Ltd. 2024-2026 V1.1

Agency Information

Agency Symbol	Standards	The File No. and certification No. obtained by SETsafe | SETfuse
	UL 60691	E214712
	CAN-CSA-E60691	E214712
	EN 60691	R50161772, R50161779
	EN 60691	40017055
	J60691	JET2121-32001-2021, JET2121-32001-2022 JET2121-32001-2023, JET2121-32001-2024 JET2121-32001-2025, JET2121-32001-2026 JET2121-32001-2027, JET2121-32001-2028
	K60691	SU05023-6001A, SU05023-6002A SU05023-6003B
	GB 9816.1	2020980205000195

Soldering

Hand-Soldering

1. Soldering should be carried out according to Table X-1.
2. The thermal element of ATCO is fusible alloy with low melting point, which is jointed with ATCO lead wires. Improper soldering operation (too high soldering temp. , too long soldering time, too short lead wire etc.) may transfer more heat to the thermal element and ATCO may open in advance.
3. When soldering conditions are more severe than those listed in Table X-1, a heat sink fixture should be used between soldering point and ATCO body.
4. When soldering, please do not pull / push or twist ATCO body or lead wires.
5. After soldering, let it naturally cool for longer than 20 seconds. During cooling, never move the ATCO body or lead wires.

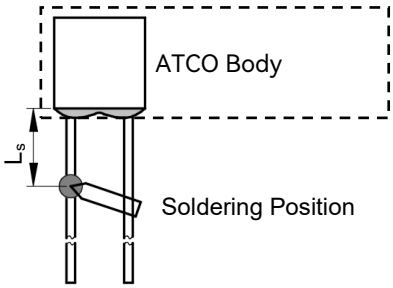

FIGURE X-1

TABLE X-1 Hand-Soldering Time

Rated Functioning Temp. (T_f)	Max. Allowable Soldering Time for Different Lead Wire Length (Fig.X-1)									Max. Soldering Temp.
	L_s Length	Time		L_s Length	Time		L_s Length	Time		
		Tinned Copper Wire	CP Wire		Tinned Copper Wire	CP Wire		Tinned Copper Wire	CP Wire	
(°C)	(mm)	(s)	(s)	(mm)	(s)	(s)	(mm)	(s)	(s)	(°C)
76 to 101	10	1[a]	4	20	2	5	30	3	6	400
102 to 115	10	1[a]	4	20	2	5	30	3	6	
116 to 135	10	1[a]	4	20	3	6	30	5	8	
136 to 150	10	3	6	20	5	8	30	5	8	
151 to 221	10	4	7	20	6	9	30	7	10	

Note:
a: Auxiliary Heat Sink Fixture is Required to Avoid ATCO Cutting off Unexpectedly.

All Rights Reserved by Xiamen SET Electronics Co., Ltd. 2024-2026 V1.1

Wave Soldering

The wave soldering parameters as Table X-2, for reference only, when ATCO is for practice use, you need to do some validation experiments. For example, using X-RAY to see the fusible alloy of ATCO whether damage after wave soldering.

TABLE X-2 Wave Soldering Parameters Setting

Rated Functioning Temp. (T_f)	Max. Allowable Preheating Temp. When the Length of Lead Wire is Different (Fig.X-1)				Preheating Time (t_1)	Max. Wave Soldering Temp.	Dwelling Time (t_2)	Cooling Time (t_3)
	L_s Length	Preheating Temp.	L_s Length	Preheating Temp.				
(°C)	(mm)	(°C)	(mm)	(°C)	(s)	(°C)	(s)	(s)
76 to 130	Recommend Hand-Soldering							
131 to 150	20	80	30	90	< 60	≤ 260	≤ 3	≤ 10
151 to 221	20	90	30	100	< 60	≤ 260	≤ 3	≤ 10

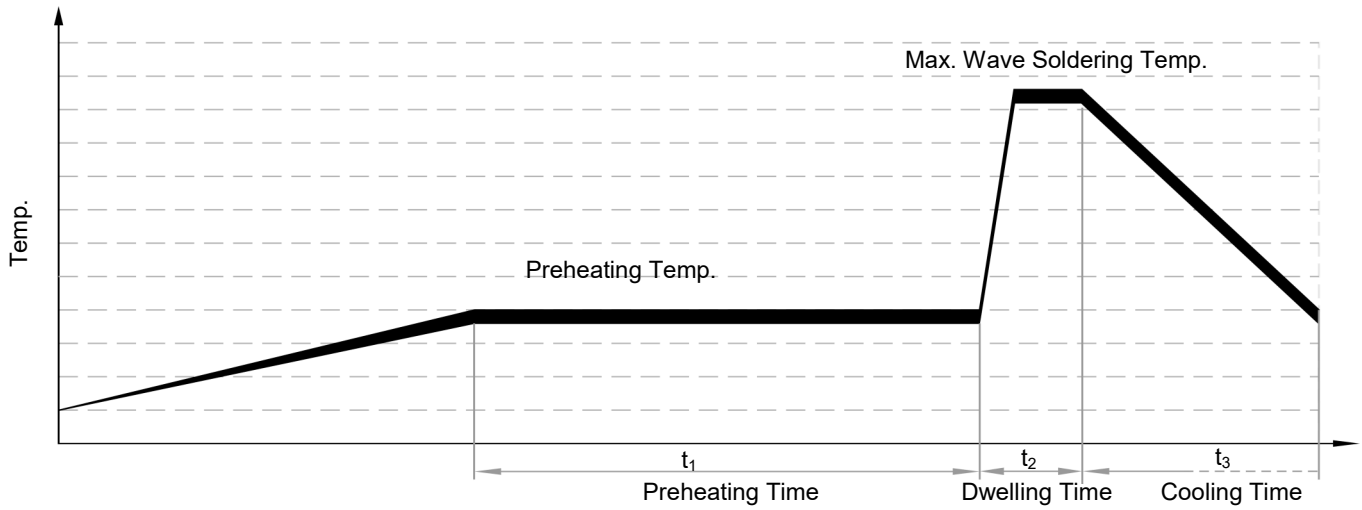

All Rights Reserved by Xiamen SET Electronics Co., Ltd. 2024-2026 V1.1

Product Temp.-Time Curve (Reference)

The Temp.-Time Curve of Thermal-Link in different temp. oil bath.

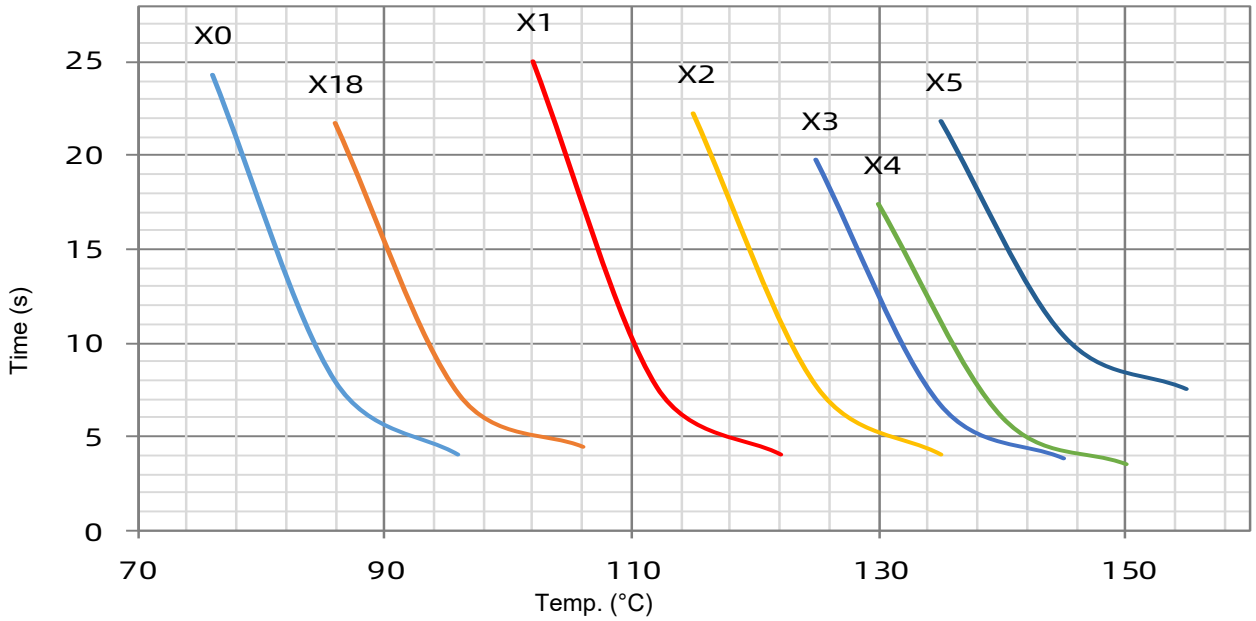

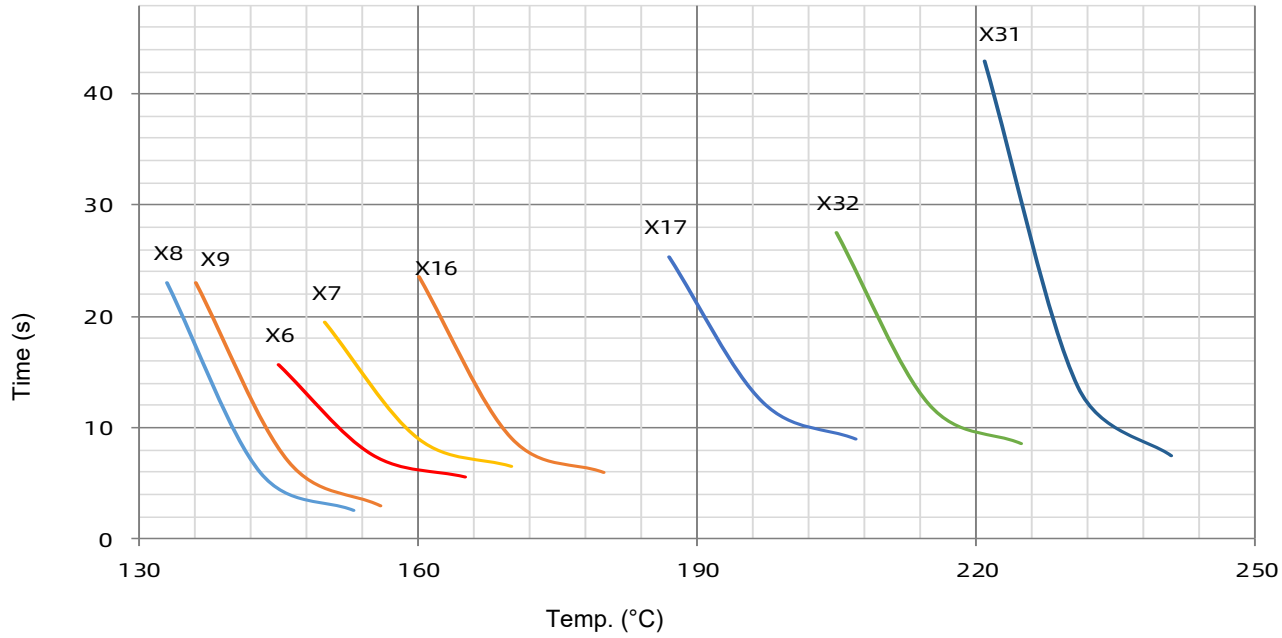

All Rights Reserved by Xiamen SET Electronics Co., Ltd. 2024-2026 V1.1

Product Current-Time Curve (Reference)

The Current-Time Curve shows functioning time at multi-times rated current at room temperature 25 ± 2 °C.

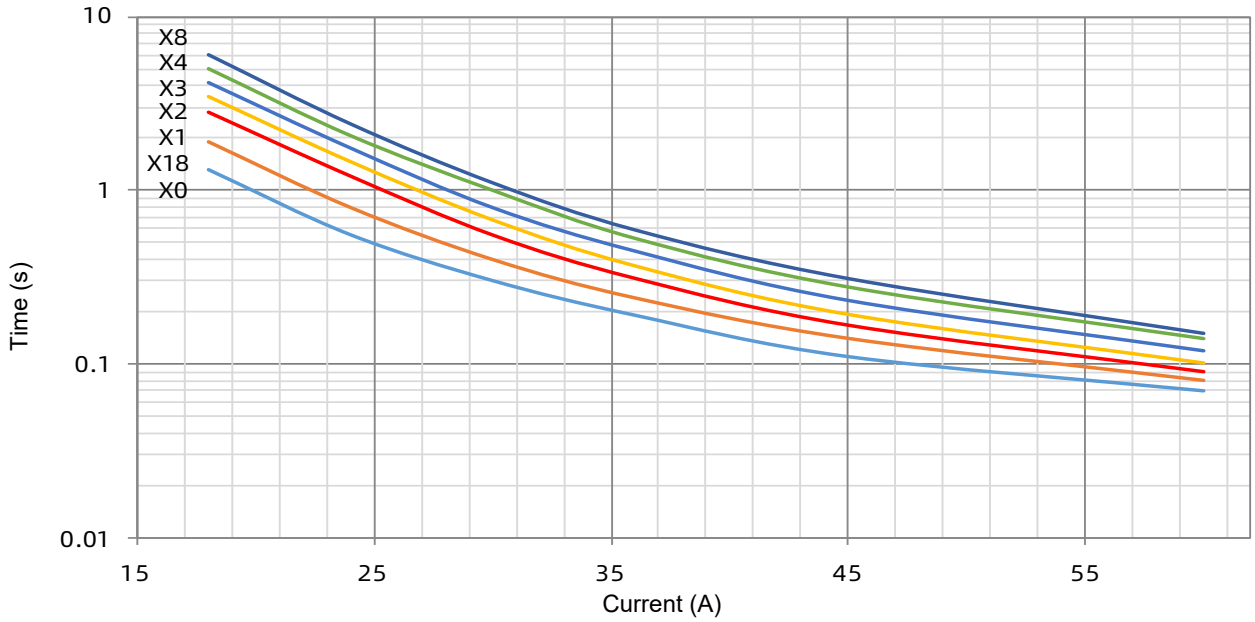

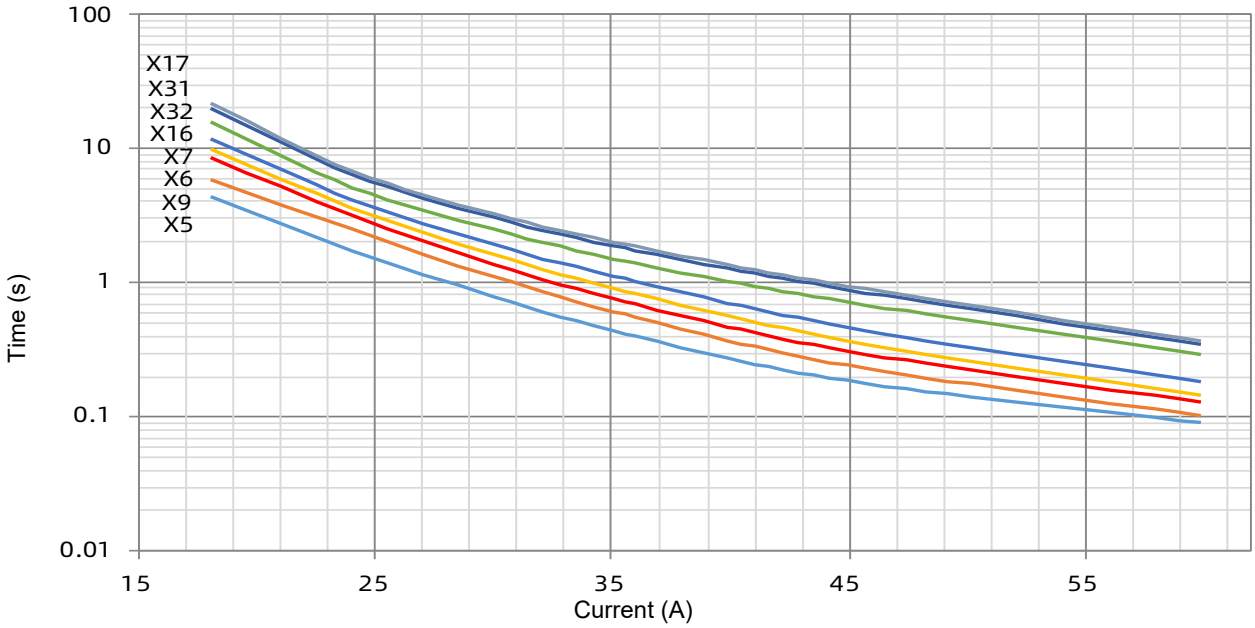

All Rights Reserved by Xiamen SET Electronics Co., Ltd. 2024-2026 V1.1

Packaging Information

Bulk

Item	Box	Carton
Dimensions (mm)	170 × 117 × 50	490 × 365 × 260
Quantity (PCS)	1000	40000
Gross Weight (kg)		16.1 ± 10%

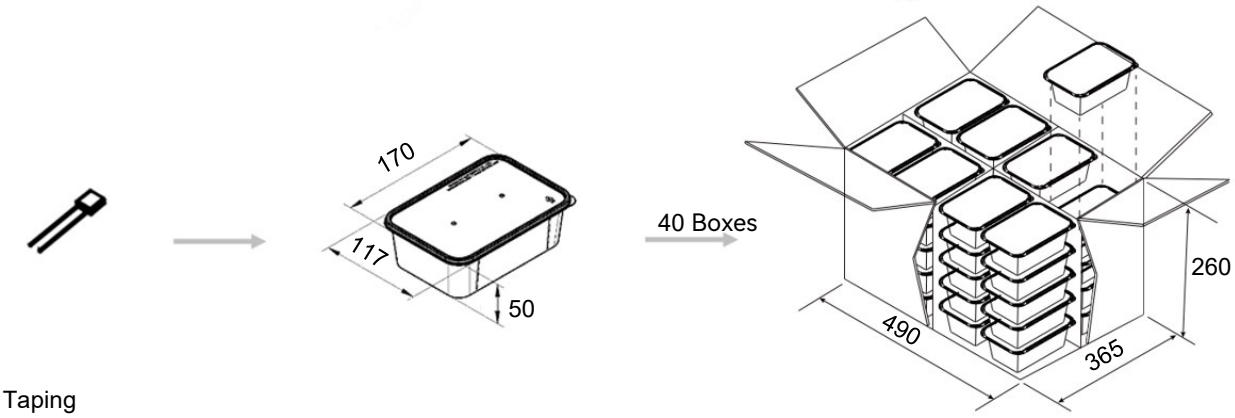

Taping

Item	Box	Carton
Dimensions (mm)	328 × 200 × 70	480 × 340 × 220
Quantity (PCS)	2000	12000
Gross Weight (kg)		6 ± 10%

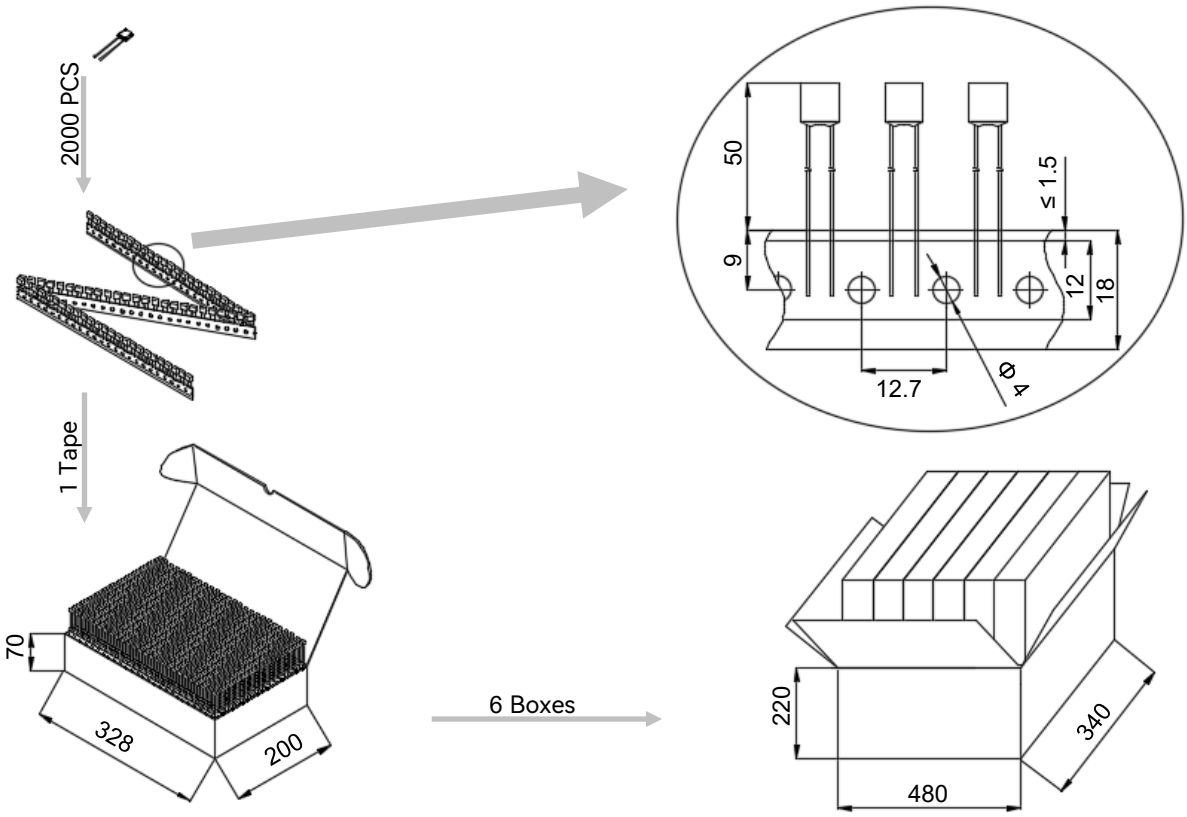

All Rights Reserved by Xiamen SET Electronics Co., Ltd. 2024-2026 V1.1

Part Numbering System

ATCO - X 2 - A N N A B - 001

Other Options

Packing

B	Bulk
T	Taping

Leads Forming

A	Straight Lead
B	Single Lead Bending
C	Leads Bending
D	Leads Kinking
E	Leads Bending and Kinking

Color of Insulation Tube

W	White
Y	Yellow
R	Red
K	Black
N	None

Insulation Tube Material

T	Teflon
P	Polyester
N	None

Lead Wire Type

A	Tinned Copper Wire
B	Tinned Copper Plated Wire

Rated Functioning Temp.

2	115 °C, See Specifications

Series

X	Series See Specifications

Product Category

ATCO	Alloy Thermal-Link

All Rights Reserved by Xiamen SET Electronics Co., Ltd. 2024-2026 V1.1

Thermal-Link (ATCO)-Alloy Type

XG Series

Description

Thermal-Link (ATCO)-Alloy Type is defined as a non-resettable protective device functioning one time only. It is widely used in electrical equipment. ATCO is mainly consist of fusible alloy, flux resin, case, sealant and lead wires. Normally, fusible alloy is jointed to the two lead wires. Under abnormal conditions, when the temp. reaches to the fusing temp. of ATCO, the fusible alloy melts and quickly retracts to the two lead wire ends with the aid of the flux resin and disconnects the circuit completely.

SETsafe | SETfuse Thermal-Link (ATCO)-Alloy Type XG series Rated Functioning Temp. from 76 ℃ to 221 ℃, Rated Current: 3 A, safety certification Includes UL, cUL, TUV, PSE, CCC, and complies with RoHS and REACH.

Features

- Non-Resettable
- High Accuracy of Functioning Temp.
- RoHS & REACH Compliant

Applications

- Lamps
- Switched-Mode Power Supplies
- Home Electrical Appliances
- Transformers
- Motors
- Batteries

Customization

- Other Temp.
- The Length of Lead Wires
- Taping Packing Available
- Lead Wires can be Insulated
- Tinned Copper Wires or CP Wires
- Leads Forming Types

Structure Diagrams

Radial

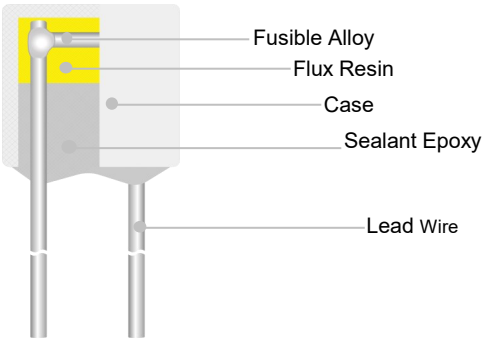

Marking

Radial (Color for reference only)

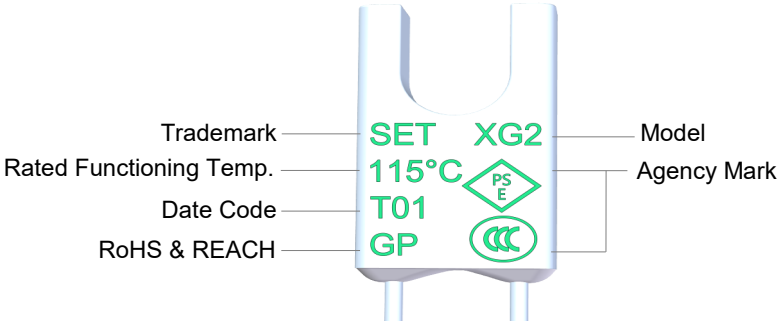

Remark: The Date Code means Year and quarter: A stands for 2000, B stands for 2001 and 01 stands for the first quarter, 02 stands for the second quarter, and so on.

Dimensions (mm)

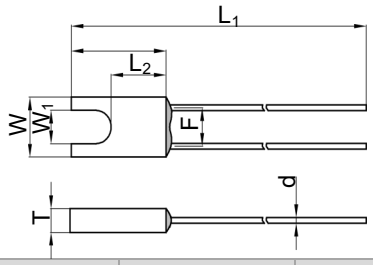

L	L_1	L_2	W	W_1	T	d	F
10.0 ± 0.5	74.0 ± 3.0	5.8 ± 0.5	5.8 ± 0.5	3.2 ± 0.5	2.3 ± 0.2	0.54 ± 0.05	3.7 ± 0.5

All Rights Reserved by Xiamen SET Electronics Co., Ltd. 2024-2026 V1.1

Specifications

Rated Functioning Temp. (T_f) °C

	Model	Fusing Temp. (°C)	T_h (°C)	T_m (°C)	I_r (A)	U_r (V)	UL	cUL	TUV	PSE	CCC	RoHS REACH
221	XG31	218 ± 2	188	250	3	AC 250	●	●	●	●	○	●
						DC *	○	○	○	○	○	●
205	XG32	199 ± 3	169	250	3	AC 250	●	●	●	●	○	●
						DC *	○	○	○	○	○	●
160	XG16	154 ± 2	135	200	3	AC 250	○	○	●	●	●	●
						DC *	○	○	○	○	○	●
150	XG7	145 ± 2	126	200	3	AC 250	●	●	●	●	●	●
						DC *	○	○	○	○	○	●
145	XG6	140 ± 2	121	200	3	AC 250	●	●	●	●	●	●
						DC *	○	○	○	○	○	●
136	XG9	131 ± 2	112	200	3	AC 250	●	●	●	●	●	●
						DC *	○	○	○	○	○	●
135	XG5	130 ± 2	111	200	3	AC 250	●	●	●	●	●	●
						DC *	○	○	○	○	○	●
133	XG8	130 ± 2	111	200	3	AC 250	●	●	●	●	●	●
						DC *	○	○	○	○	○	●
130	XG4	125 ± 2	106	200	3	AC 250	●	●	●	●	●	●
						DC *	○	○	○	○	○	●
125	XG3	121 ± 2	100	200	3	AC 250	●	●	●	●	●	●
						DC 60	●	●	○	○	○	●
115	XG2	111 ± 2	91	200	3	AC 250	●	●	●	●	●	●
						DC 60	●	●	○	○	○	●
102	XG1	98 ± 3	79	200	3	AC 250	●	●	●	●	●	●
						DC 60	●	●	○	○	○	●
86	XG18	81 ± 3	61	200	3	AC 250	●	●	●	●	●	●
						DC 60	●	●	○	○	○	●
76	XG0	73 ± 2	53	200	3	AC 250	●	●	●	●	●	●
						DC *	○	○	○	○	○	●

Note:

1: "●"Means certificated, "○"Means non-certificated, RoHS & REACH Compliant .

2: " * "Customizable DC voltage.

All Rights Reserved by Xiamen SET Electronics Co., Ltd. 2024-2026 V1.1

Agency Information

Agency Symbol	Standards	The File No. and certification No. obtained by SETsafe | SETfuse
	UL 60691	E214712
	CAN-CSA-E60691	E214712
	EN 60691	R50384415
	J60691	JET2121-32001-2021、JET2121-32001-2022 JET2121-32001-2023、JET2121-32001-2024 JET2121-32001-2025、JET2121-32001-2026 JET2121-32001-2027、JET2121-32001-2028
	GB 9816.1	2020980205000195

Soldering

Hand-Soldering

1. Soldering should be carried out according to Table XG-1.
2. The thermal element of ATCO is fusible alloy with low melting point, which is jointed with ATCO lead wires. Improper soldering operation (too high soldering temp. , too long soldering time, too short lead wire etc.) may transfer more heat to the thermal element and ATCO may open in advance.
3. When soldering conditions are more severe than those listed in Table XG-1, a heat sink fixture should be used between soldering point and ATCO body.
4. When soldering, please do not pull / push or twist ATCO body or lead wires.
5. After soldering, let it naturally cool for longer than 20 seconds. During cooling, never move the ATCO body or lead wires.

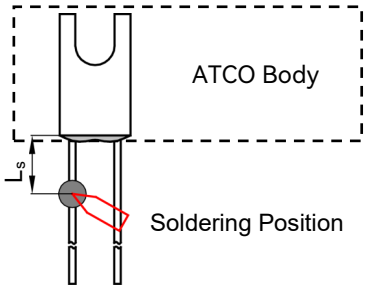

FIGURE XG-1

TABLE XG-1 Hand-Soldering Time

Rated Functioning Temp. (T_f)	Max. Allowable Soldering Time for Different Lead Wire Length (Fig.XG-1)									Max. Soldering Temp.
	L_s Length	Time		L_s Length	Time		L_s Length	Time		
		Tinned Copper Wire	CP Wire		Tinned Copper Wire	CP Wire		Tinned Copper Wire	CP Wire	
(°C)	(mm)	(s)	(s)	(mm)	(s)	(s)	(mm)	(s)	(s)	(°C)
76 to 101	10	1[a]	4	20	2	5	30	3	6	400
102 to 115	10	1[a]	4	20	2	5	30	3	6	
116 to 135	10	1[a]	4	20	3	6	30	5	8	
136 to 150	10	3	6	20	5	8	30	5	8	
151 to 221	10	4	7	20	6	9	30	7	10	

Note:
a: Auxiliary Heat Sink Fixture is Required to Avoid ATCO Cutting off Unexpectedly.

All Rights Reserved by Xiamen SET Electronics Co., Ltd. 2024-2026 V1.1

Wave Soldering

The wave soldering parameters as Table XG-2, for reference only, when ATCO is for practice use, you need to do some validation experiments. For example, using X-RAY to see the fusible alloy of ATCO whether damage after wave soldering.

TABLE XG-2 Wave Soldering Parameters Setting

Rated Functioning Temp. (T_f)	Max. Allowable Preheating Temp. When the Length of Lead Wire is Different (Fig.XG-1)				Preheating Time (t_1)	Max. Wave Soldering Temp.	Dwelling Time (t_2)	Cooling Time (t_3)
	L_s Length	Preheating Temp.	L_s Length	Preheating Temp.				
(°C)	(mm)	(°C)	(mm)	(°C)	(s)	(°C)	(s)	(s)
76 to 130	Recommend Hand-Soldering							
131 to 150	20	80	30	90	< 60	≤ 260	≤ 3	≤ 10
151 to 221	20	90	30	100	< 60	≤ 260	≤ 3	≤ 10

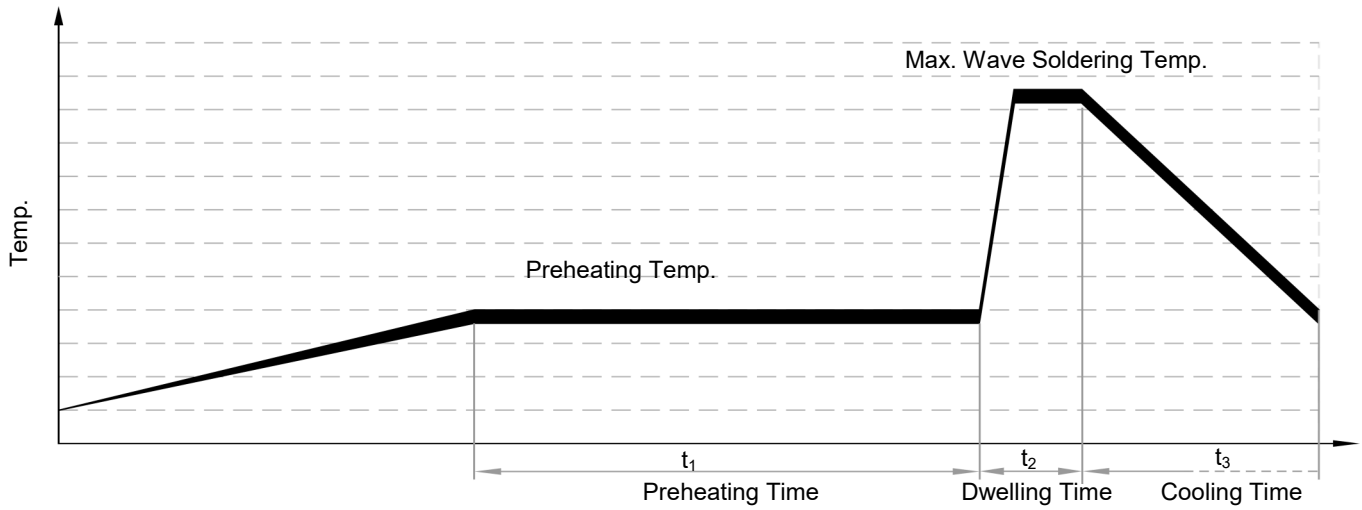

All Rights Reserved by Xiamen SET Electronics Co., Ltd. 2024-2026 V1.1

Product Temp.-Time Curve (Reference)

The Temp.-Time Curve of Thermal-Link in different temp. oil bath.

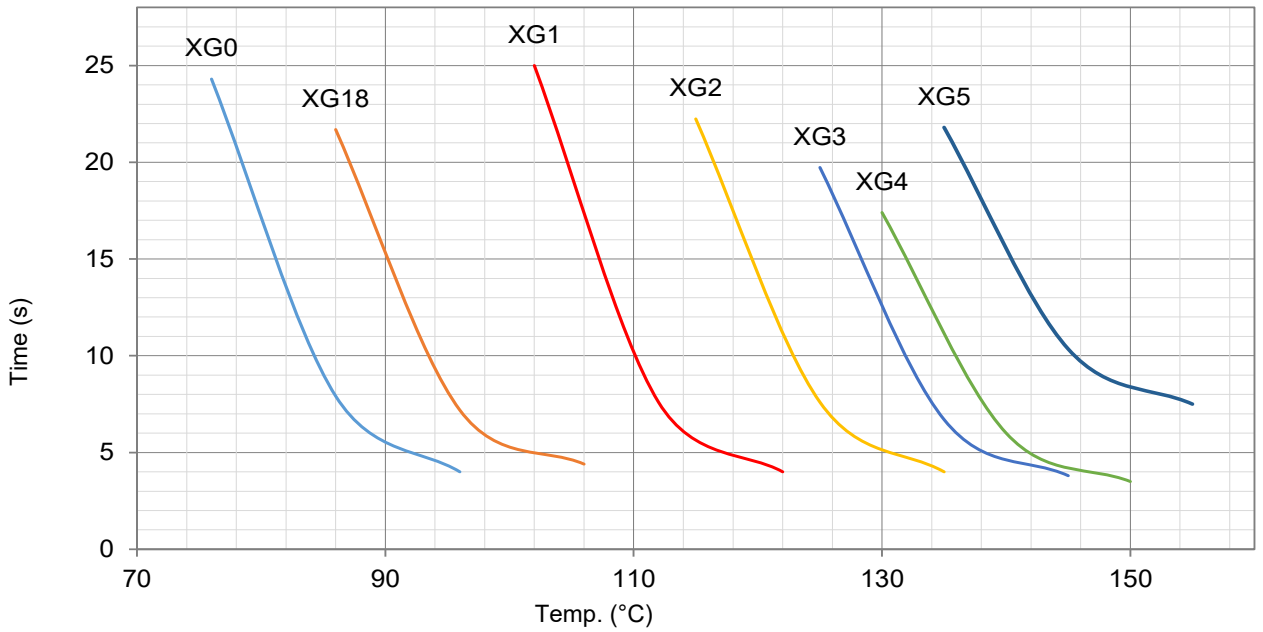

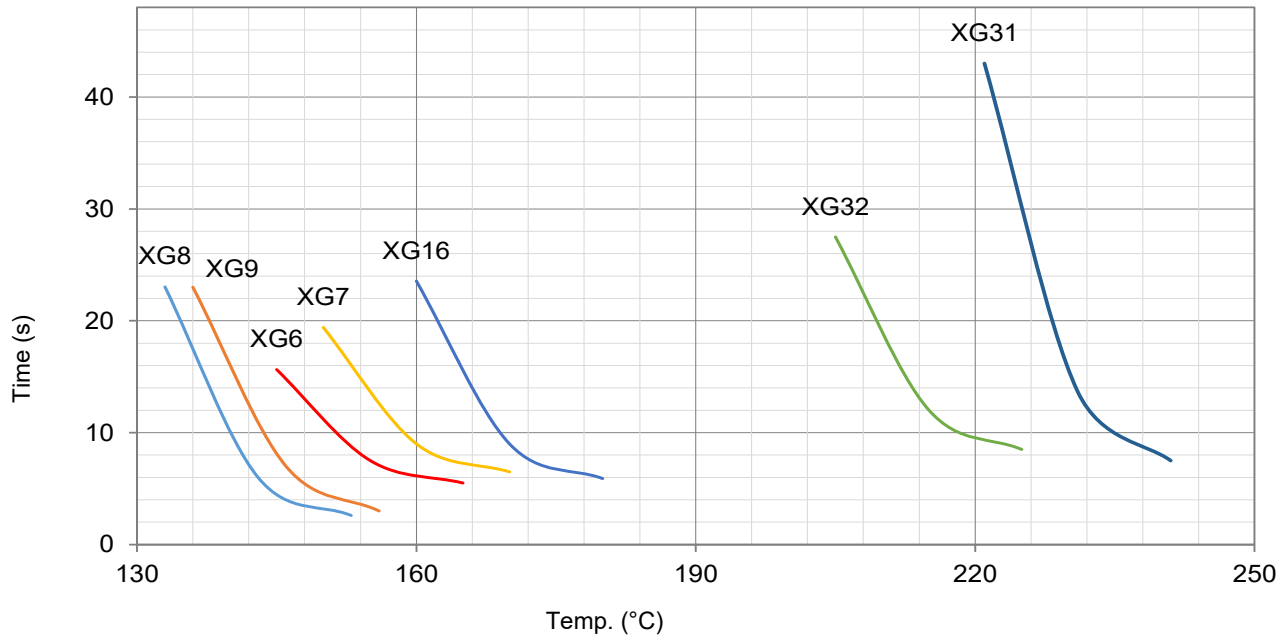

All Rights Reserved by Xiamen SET Electronics Co., Ltd. 2024-2026 V1.1

Product Current-Time Curve (Reference)

The Current-Time Curve shows functioning time at multi-times rated current at room temperature 25 ± 2 °C.

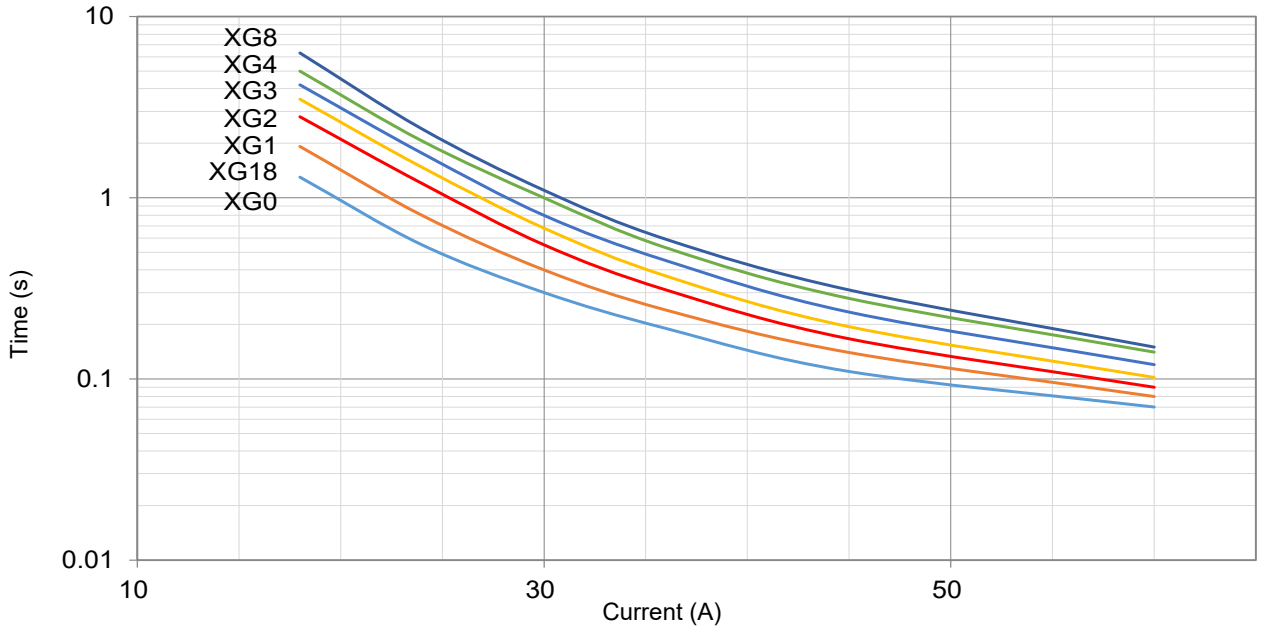

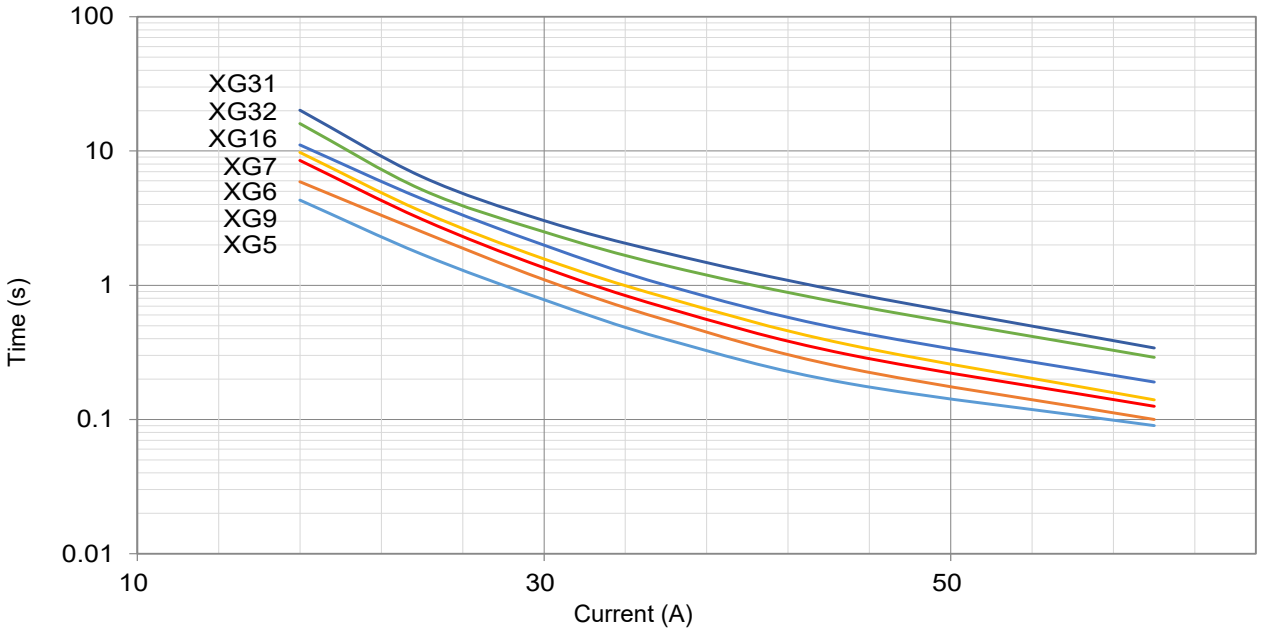

All Rights Reserved by Xiamen SET Electronics Co., Ltd. 2024-2026 V1.1

Packaging Information

Bulk

Item	Box	Carton
Dimensions (mm)	170 × 117 × 50	490 × 365 × 260
Quantity (PCS)	700	28000
Gross Weight (kg)		12.8 ± 10%

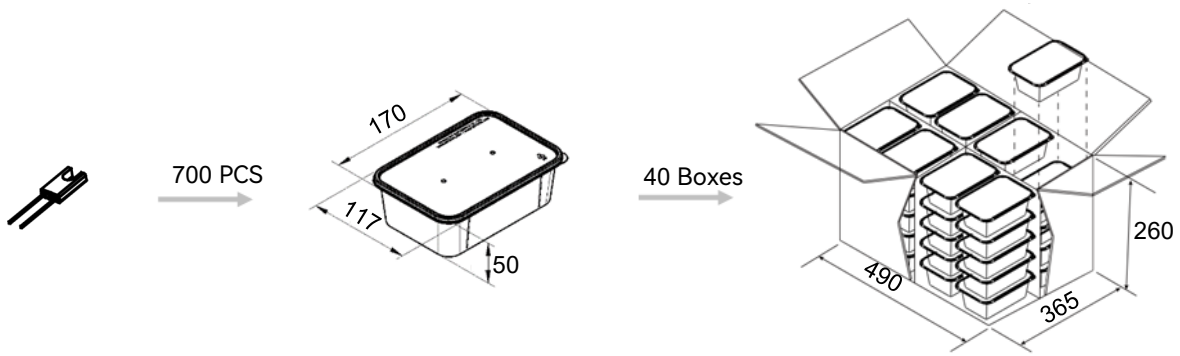

Taping

Item	Box	Carton
Dimensions (mm)	328 × 200 × 70	480 × 340 × 220
Quantity (PCS)	2000	12000
Gross Weight (kg)		6 ± 10%

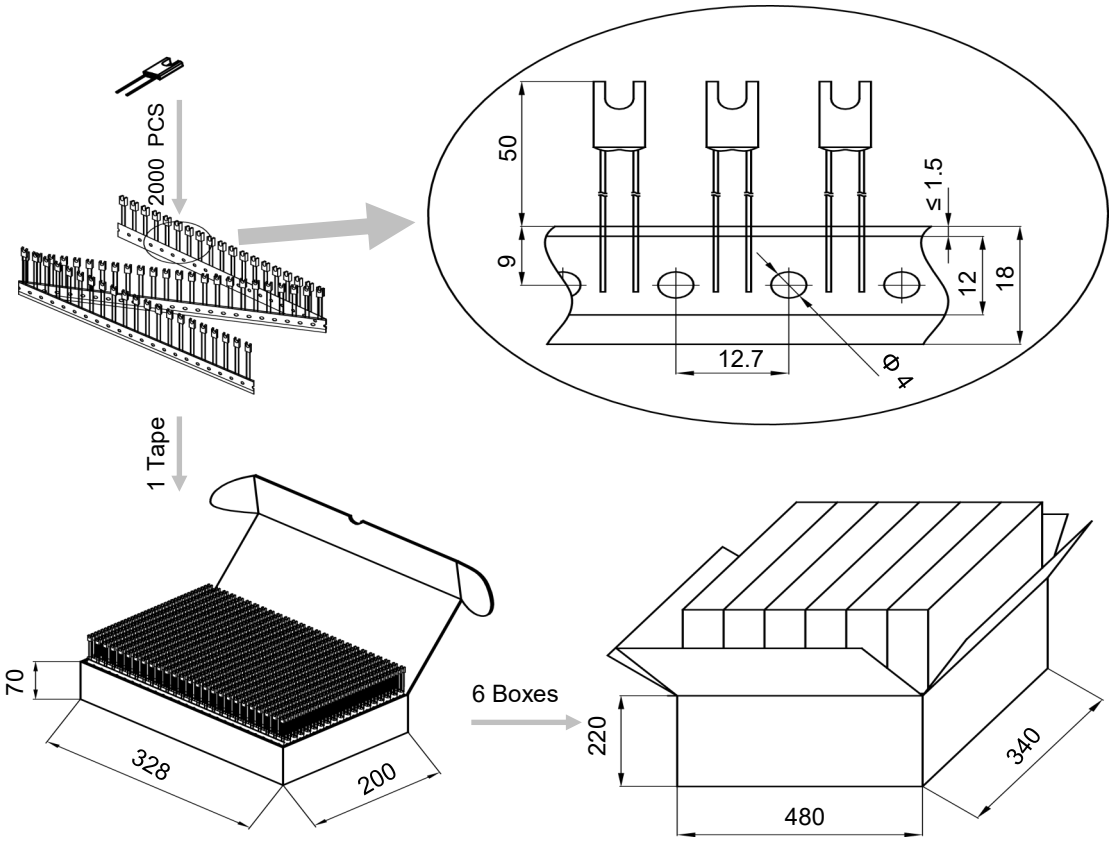

All Rights Reserved by Xiamen SET Electronics Co., Ltd. 2024-2026 V1.1

Part Numbering System

ATCO - XG 2 - A N N A B - 001

Other Options

Packing

B	Bulk
T	Taping

Leads Forming

A	Straight Lead
B	Single Lead Bending
C	Leads Bending
D	Leads Kinking
E	Leads Bending and Kinking

Color of Insulation Tube

W	White
Y	Yellow
R	Red
K	Black
N	None

Insulation Tube Material

T	Teflon
P	Polyester
N	None

Lead Wire Type

A	Tinned Copper Wire
B	Tinned Copper Plated Wire

Rated Functioning Temp.

2	115 °C, See Specifications

Series

XG	Series See Specifications

Product Category

ATCO	Alloy Thermal-Link

All Rights Reserved by Xiamen SET Electronics Co., Ltd. 2024-2026 V1.1

Thermal-Link (ATCO)-Alloy Type

KM Series

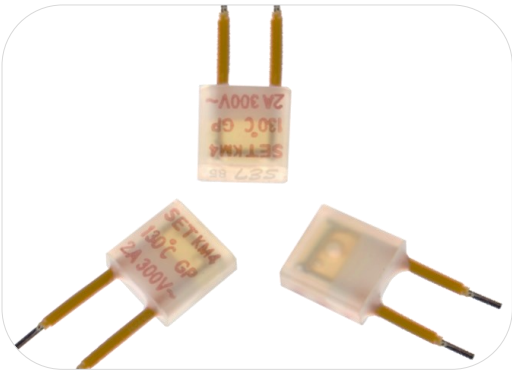

Description

Thermal-Link (ATCO)-Alloy Type is defined as a non-resettable protective device functioning one time only. It is widely used in electrical equipment. ATCO is mainly consist of fusible alloy, flux resin, case, sealant and lead wires. Normally, fusible alloy is jointed to the two lead wires. Under abnormal conditions, when the temp. reaches to the fusing temp. of ATCO, the fusible alloy melts and quickly retracts to the two lead wire ends with the aid of the flux resin and disconnects the circuit completely.

SETsafe | SETfuse Thermal-Link (ATCO)-Alloy Type KM series Rated Functioning Temp. from 125 ℃ to 150 ℃, Rated Current: 2 A, safety certification Includes UL, cUL, TUV, PSE, VDE, KC, CCC, and complies with RoHS and REACH.

Features

- Non-Resettable
- High Accuracy of Functioning Temp.
- RoHS & REACH Compliant

Applications

- Lamps
- Switched-Mode Power Supplies
- Home Electrical Appliances
- Transformers
- Motors
- Batteries

Customization

- Other Temp.
- The Length of Lead Wires
- Taping Packing Available
- Lead Wires can be Insulated
- Tinned Copper Wires or CP Wires
- Leads Forming Types

Structure Diagrams

Radial

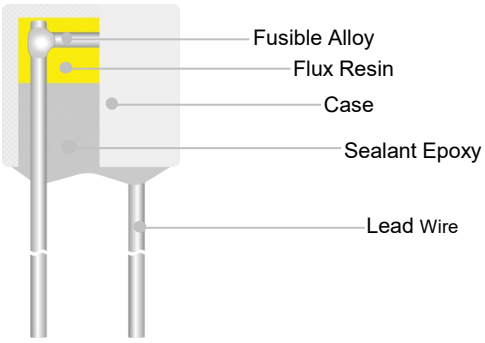

Marking

Radial (Color for reference only)

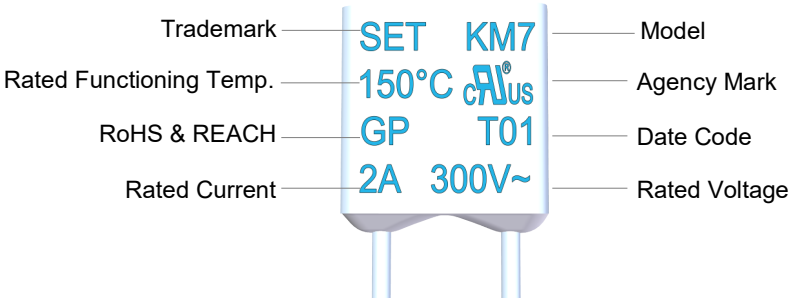

Remark: The Date Code means Year and quarter: A stands for 2000, B stands for 2001 and 01 stands for the first quarter, 02 stands for the second quarter, and so on.

Dimensions (mm)

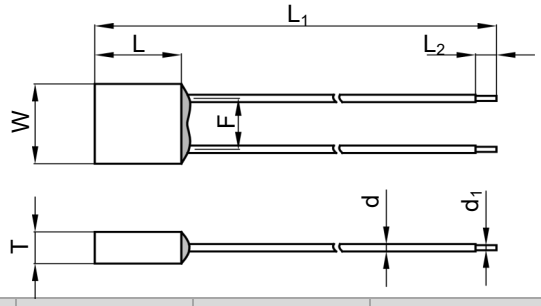

L	L_1	L_2	W	T	d	d_1	F
5.8 ± 0.5	70.0 ± 3.0	5.0 ± 1.0	5.8 ± 0.5	2.3 ± 0.2	0.8 ± 0.1	0.54 ± 0.05	3.7 ± 0.5

All Rights Reserved by Xiamen SET Electronics Co., Ltd. 2024-2026 V1.1

Specifications

Rated Functioning Temp. (T_f) °C	Model	Fusing Temp. (°C)	T_h (°C)	T_m (°C)	I_r (A)	U_r (V)	UL	cUL	TUV	PSE	CCC	RoHS REACH
150	KM7	145 ± 2	126	200	2	AC 300	●	●	●	●	●	●
						AC 320	●	●	○	●	○	●
135	KM5	130 ± 2	111	200	2	AC 300	●	●	●	●	●	●
						AC 320	●	●	○	●	○	●
130	KM4	125 ± 2	106	200	2	AC 300	●	●	●	●	●	●
						AC 320	●	●	○	●	○	●
125	KM3	121 ± 2	100	200	2	AC 300	○	○	○	●	●	●
						AC 320	●	●	○	●	○	●

Note:

1: "●"Means certificated, "○"Means non-certificated, RoHS & REACH Compliant .

2: " * "Customizable DC voltage.

All Rights Reserved by Xiamen SET Electronics Co., Ltd. 2024-2026 V1.1

Agency Information

Agency Symbol	Standards	The File No. and certification No. obtained by SETsafe | SETfuse
	UL 60691	E214712
	CAN-CSA-E60691	E214712
	EN 60691	R50388884
	J60691	JET2121-32001-2024 、JET2121-32001-2025
	GB 9816.1	2023000205000009

Soldering

Hand-Soldering

1. Soldering should be carried out according to Table KM-1.
2. The thermal element of ATCO is fusible alloy with low melting point, which is jointed with ATCO lead wires. Improper soldering operation (too high soldering temp. , too long soldering time, too short lead wire etc.) may transfer more heat to the thermal element and ATCO may open in advance.
3. When soldering conditions are more severe than those listed in Table KM-1, a heat sink fixture should be used between soldering point and ATCO body.
4. When soldering, please do not pull / push or twist ATCO body or lead wires.
5. After soldering, let it naturally cool for longer than 20 seconds. During cooling, never move the ATCO body or lead wires.

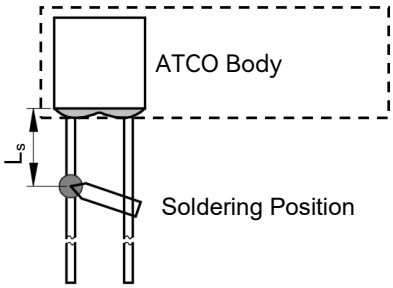

FIGURE KM-1

TABLE KM-1 Hand-Soldering Time

Rated Functioning Temp. (T_f)	Max. Allowable Soldering Time for Different Lead Wire Length (Fig.KM-1)									Max. Soldering Temp.
	L_s Length	Time		L_s Length	Time		L_s Length	Time		
		Tinned Copper Wire	CP Wire		Tinned Copper Wire	CP Wire		Tinned Copper Wire	CP Wire	
(°C)	(mm)	(s)	(s)	(mm)	(s)	(s)	(mm)	(s)	(s)	(°C)
125 to 135	10	1[a]	4	20	3	6	30	5	8	400
136 to 150	10	3	6	20	5	8	30	5	8	

Note:
a: Auxiliary Heat Sink Fixture is Required to Avoid ATCO Cutting off Unexpectedly.

All Rights Reserved by Xiamen SET Electronics Co., Ltd. 2024-2026 V1.1

Wave Soldering

The wave soldering parameters as Table KM-2, for reference only, when ATCO is for practice use, you need to do some validation experiments. For example, using X-RAY to see the fusible alloy of ATCO whether damage after wave soldering.

TABLE KM-2 Wave Soldering Parameters Setting

Rated Functioning Temp. (T_f)	Max. Allowable Preheating Temp. When the Length of Lead Wire is Different (Fig.KM-1)				Preheating Time (t_1)	Max. Wave Soldering Temp.	Dwelling Time (t_2)	Cooling Time (t_3)
	L_s Length	Preheating Temp.	L_s Length	Preheating Temp.				
(°C)	(mm)	(°C)	(mm)	(°C)	(s)	(°C)	(s)	(s)
125 to 150	20	80	30	90	< 60	≤ 260	≤ 3	≤ 10

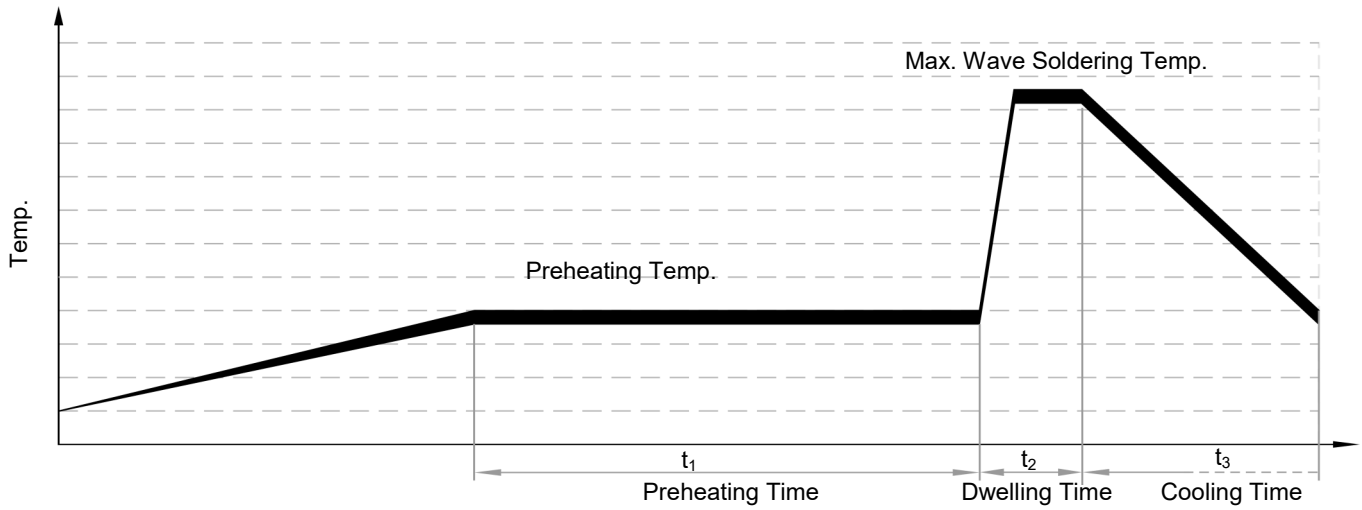

All Rights Reserved by Xiamen SET Electronics Co., Ltd. 2024-2026 V1.1

Product Temp.-Time Curve (Reference)

The Temp.-Time Curve of Thermal-Link in different temp. oil bath.

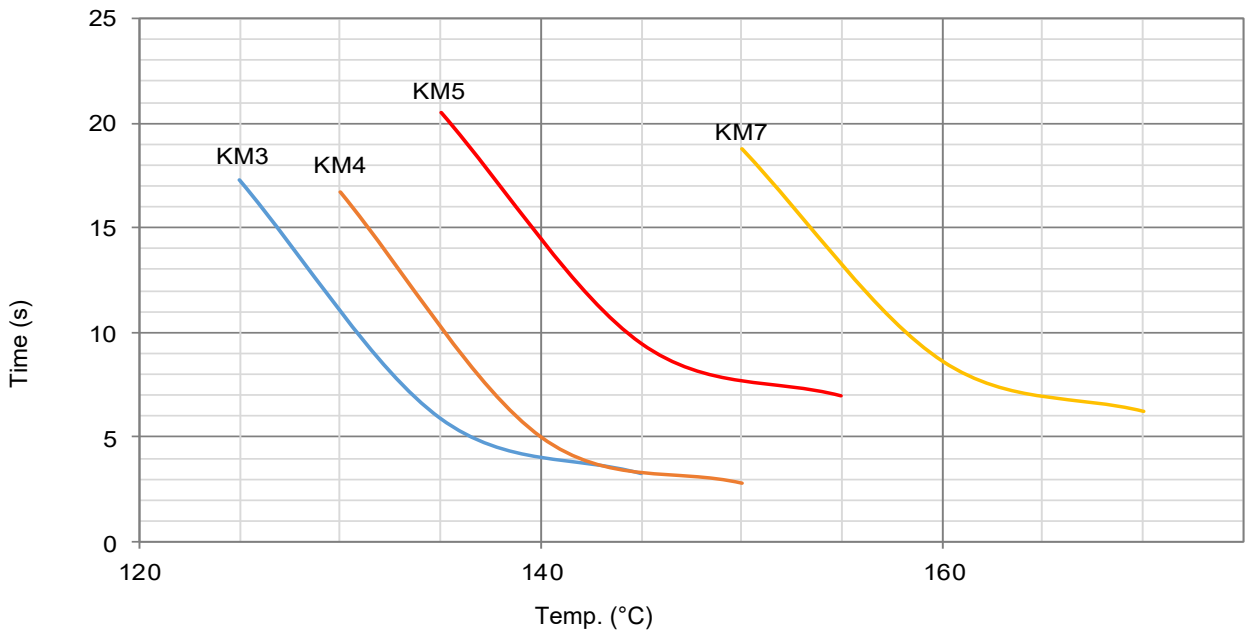

Product Current-Time Curve (Reference)

The Current-Time Curve shows functioning time at multi-times rated current at room temperature 25 ± 2 °C.

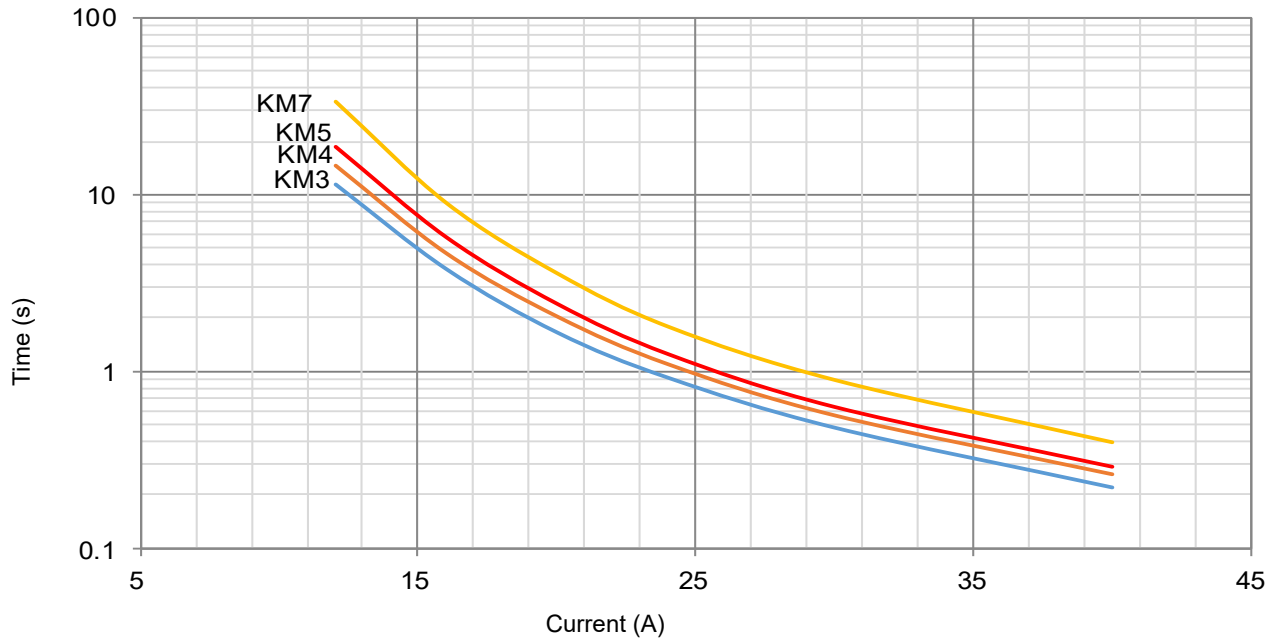

All Rights Reserved by Xiamen SET Electronics Co., Ltd. 2024-2026 V1.1

Packaging Information

Bulk

Item	Box	Carton
Dimensions (mm)	170 × 117 × 50	490 × 365 × 260
Quantity (PCS)	1000	40000
Gross Weight (kg)		17.3 ± 10%

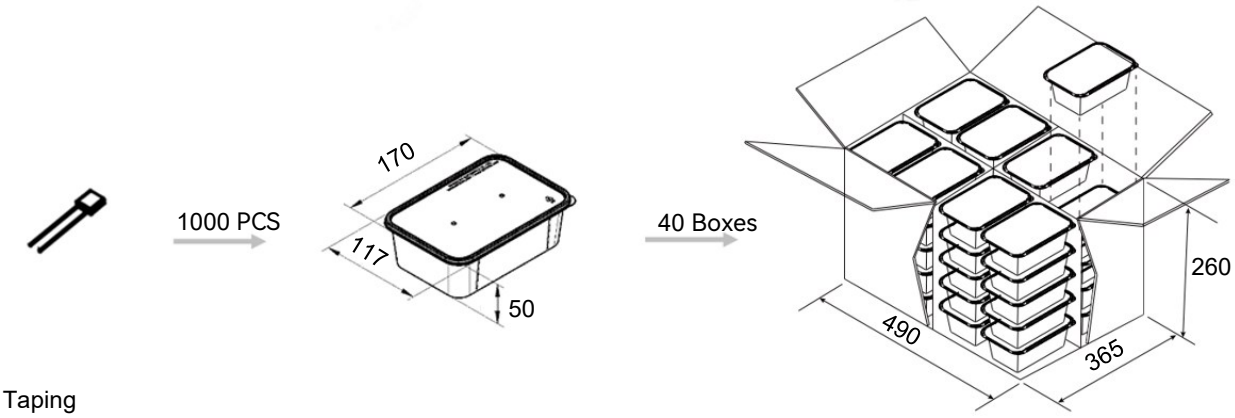

Taping

Item	Box	Carton
Dimensions (mm)	328 × 200 × 70	480 × 340 × 220
Quantity (PCS)	2000	12000
Gross Weight (kg)		6.5 ± 10%

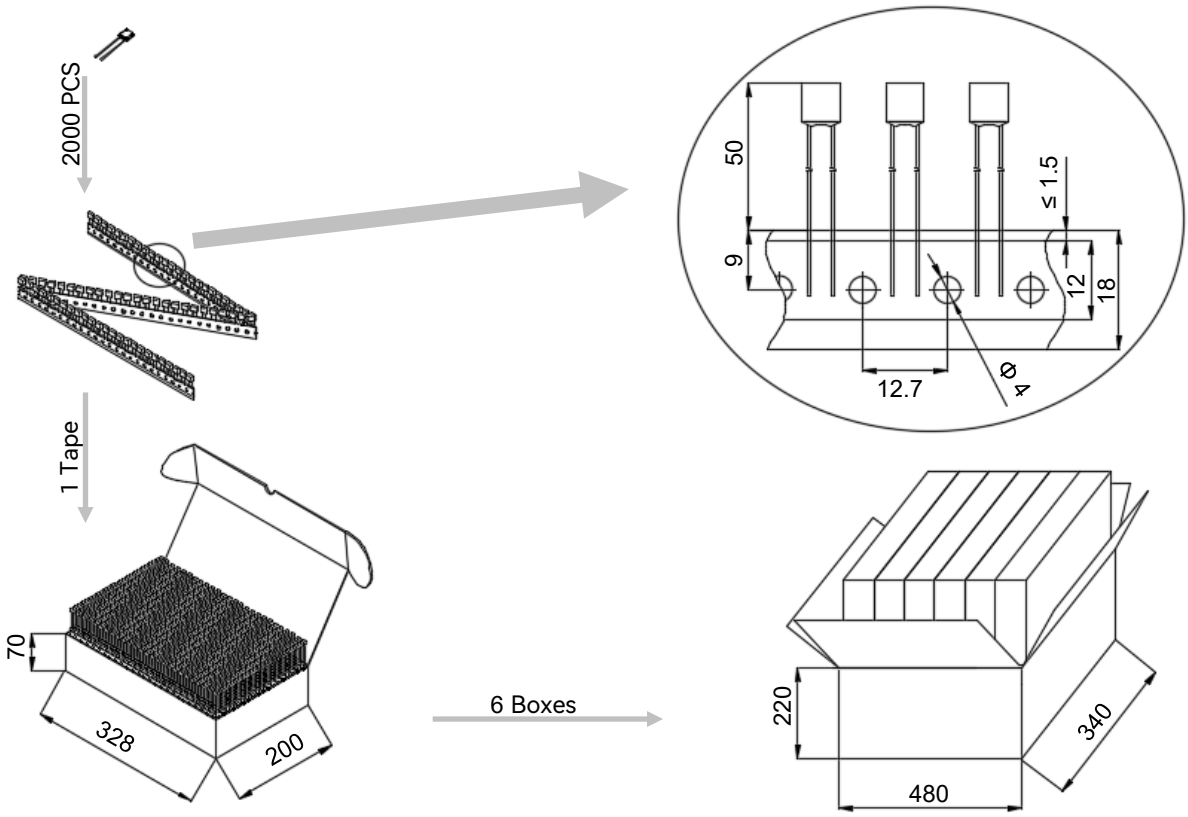

All Rights Reserved by Xiamen SET Electronics Co., Ltd. 2024-2026 V1.1

Part Numbering System

ATCO - KM 3 - A N N A B - 001

Other Options

Packing

B	Bulk
T	Taping

Leads Forming

A	Straight Lead
B	Single Lead Bending
C	Leads Bending
D	Leads Kinking
E	Leads Bending and Kinking

Color of Insulation Tube

W	White
Y	Yellow
R	Red
K	Black
N	None

Insulation Tube Material

T	Teflon
P	Polyester
N	None

Lead Wire Type

A	Tinned Copper Wire
B	Tinned Copper Plated Wire

Rated Functioning Temp.

3	125 °C, See Specifications

Series

KM	Series See Specifications

Product Category

ATCO	Alloy Thermal-Link

All Rights Reserved by Xiamen SET Electronics Co., Ltd. 2024-2026 V1.1

Thermal-Link (ATCO)-Alloy Type

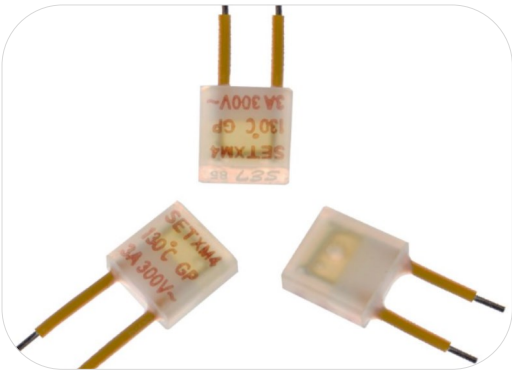

Description

Thermal-Link (ATCO)-Alloy Type is defined as a non-resettable protective device functioning one time only. It is widely used in electrical equipment. ATCO is mainly consist of fusible alloy, flux resin, case, sealant and lead wires. Normally, fusible alloy is jointed to the two lead wires. Under abnormal conditions, when the temp. reaches to the fusing temp. of ATCO, the fusible alloy melts and quickly retracts to the two lead wire ends with the aid of the flux resin and disconnects the circuit completely.

SETsafe | SETfuse Thermal-Link (ATCO)-Alloy Type XM series Rated Functioning Temp. from 125 ℃ to 150 ℃, Rated Current: 3 A, safety certification Includes UL, cUL, TUV, PSE, VDE, KC, CCC, and complies with RoHS and REACH.

Features

- Non-Resettable
- High Accuracy of Functioning Temp.
- RoHS & REACH Compliant

Applications

- Lamps
- Switched-Mode Power Supplies
- Home Electrical Appliances
- Transformers
- Motors
- Batteries

Customization

- Other Temp.
- The Length of Lead Wires
- Taping Packing Available
- Lead Wires can be Insulated
- Tinned Copper Wires or CP Wires
- Leads Forming Types

Structure Diagrams

Radial

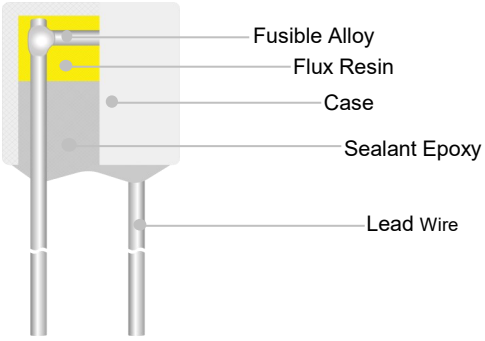

Marking

Radial (Color for reference only)

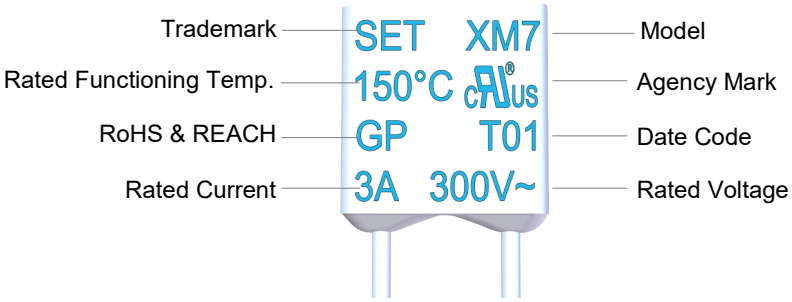

Remark: The Date Code means Year and quarter: A stands for 2000, B stands for 2001 and 01 stands for the first quarter, 02 stands for the second quarter, and so on.

Dimensions (mm)

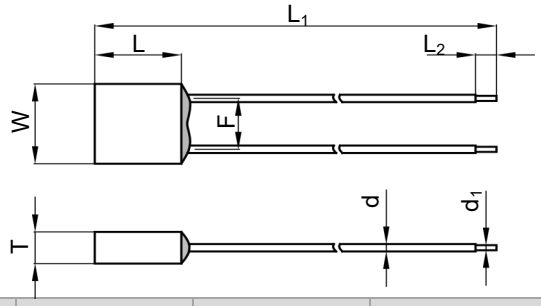

L	L_1	L_2	W	T	d	d_1	F
5.8 ± 0.5	70.0 ± 3.0	5.0 ± 1.0	5.8 ± 0.5	2.3 ± 0.2	0.8 ± 0.1	0.54 ± 0.05	3.7 ± 0.5

All Rights Reserved by Xiamen SET Electronics Co., Ltd. 2024-2026 V1.1

Specifications

Rated Functioning Temp. (T_f) °C	Model	Fusing Temp. (°C)	T_h (°C)	T_m (°C)	I_r (A)	U_r (V)	UL	cUL	TUV	PSE	CCC	RoHS REACH
150	XM7	145 ± 2	126	200	3	AC 300	●	●	●	●	●	●
						AC 320	●	●	○	●	○	●
135	XM5	130 ± 2	111	200	3	AC 300	●	●	●	●	●	●
						AC 320	●	●	○	●	○	●
130	XM4	125 ± 2	106	200	3	AC 300	●	●	●	●	●	●
						AC 320	●	●	○	●	○	●
125	XM3	121 ± 2	100	200	3	AC 300	○	○	○	●	●	●
						AC 320	●	●	○	●	○	●

Note:

1: "●"Means certificated, "○"Means non-certificated, RoHS & REACH Compliant .

2: " * "Customizable DC voltage.

All Rights Reserved by Xiamen SET Electronics Co., Ltd. 2024-2026 V1.1

Agency Information

Agency Symbol	Standards	The File No. and certification No. obtained by SETsafe | SETfuse
	UL 60691	E214712
	CAN-CSA-E60691	E214712
	EN 60691	R50388884
	J60691	JET2121-32001-2024 、JET2121-32001-2025
	GB 9816.1	2023000205000009

Soldering

Hand-Soldering

1. Soldering should be carried out according to Table XM-1.
2. The thermal element of ATCO is fusible alloy with low melting point, which is jointed with ATCO lead wires. Improper soldering operation (too high soldering temp. , too long soldering time, too short lead wire etc.) may transfer more heat to the thermal element and ATCO may open in advance.
3. When soldering conditions are more severe than those listed in Table XM-1, a heat sink fixture should be used between soldering point and ATCO body.
4. When soldering, please do not pull / push or twist ATCO body or lead wires.
5. After soldering, let it naturally cool for longer than 20 seconds. During cooling, never move the ATCO body or lead wires.

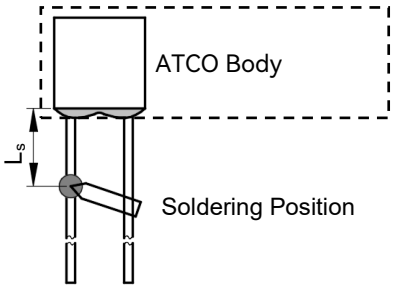

FIGURE XM-1

TABLE XM-1 Hand-Soldering Time

Rated Functioning Temp. (T_f)	Max. Allowable Soldering Time for Different Lead Wire Length (Fig.XM-1)									Max. Soldering Temp.
	L_s Length	Time		L_s Length	Time		L_s Length	Time		
		Tinned Copper Wire	CP Wire		Tinned Copper Wire	CP Wire		Tinned Copper Wire	CP Wire	
(°C)	(mm)	(s)	(s)	(mm)	(s)	(s)	(mm)	(s)	(s)	(°C)
125 to 135	10	1[a]	4	20	3	6	30	5	8	400
136 to 150	10	3	6	20	5	8	30	5	8	

Note:
a: Auxiliary Heat Sink Fixture is Required to Avoid ATCO Cutting off Unexpectedly.

All Rights Reserved by Xiamen SET Electronics Co., Ltd. 2024-2026 V1.1

Wave Soldering

The wave soldering parameters as Table XM-2, for reference only, when ATCO is for practice use, you need to do some validation experiments. For example, using X-RAY to see the fusible alloy of ATCO whether damage after wave soldering.

TABLE XM-2 Wave Soldering Parameters Setting

Rated Functioning Temp. (T_f)	Max. Allowable Preheating Temp. When the Length of Lead Wire is Different (Fig.XM-1)				Preheating Time (t_1)	Max. Wave Soldering Temp.	Dwelling Time (t_2)	Cooling Time (t_3)
	L_s Length	Preheating Temp.	L_s Length	Preheating Temp.				
(°C)	(mm)	(°C)	(mm)	(°C)	(s)	(°C)	(s)	(s)
125 to 150	20	80	30	90	< 60	≤ 260	≤ 3	≤ 10

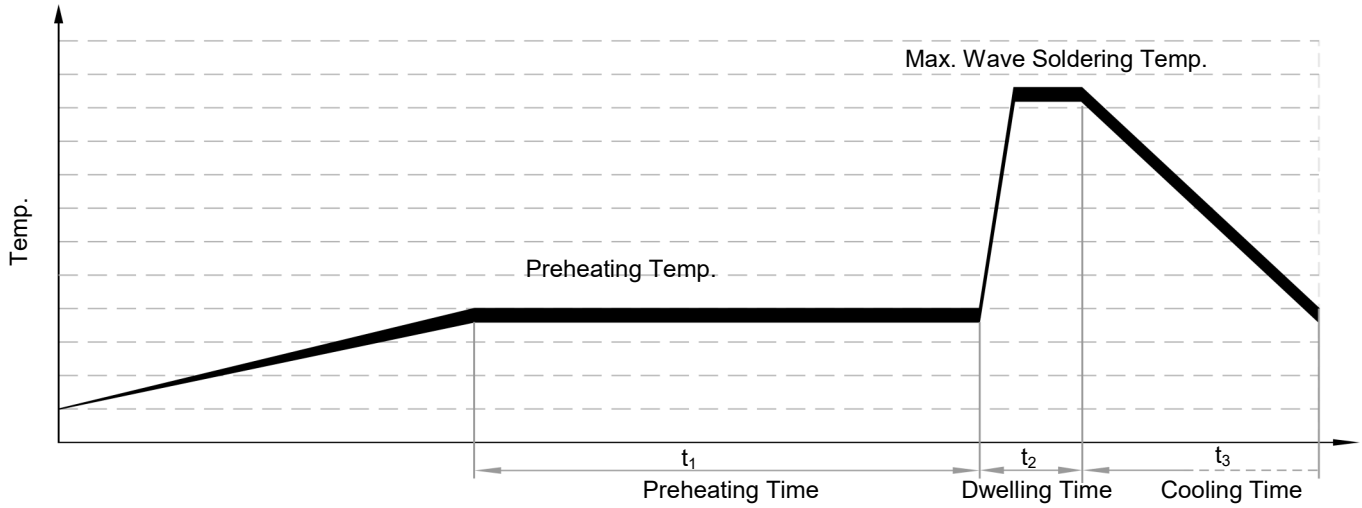

All Rights Reserved by Xiamen SET Electronics Co., Ltd. 2024-2026 V1.1

Product Temp.-Time Curve (Reference)

The Temp.-Time Curve of Thermal-Link in different temp. oil bath.

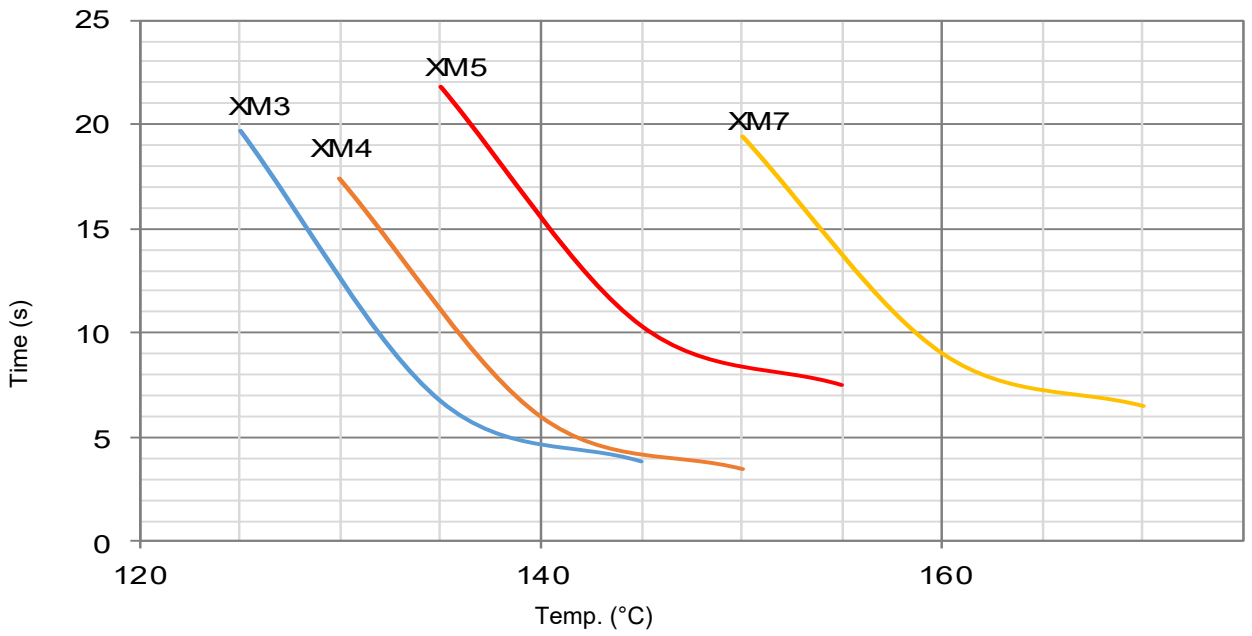

Product Current-Time Curve (Reference)

The Current-Time Curve shows functioning time at multi-times rated current at room temperature 25 ± 2 °C.

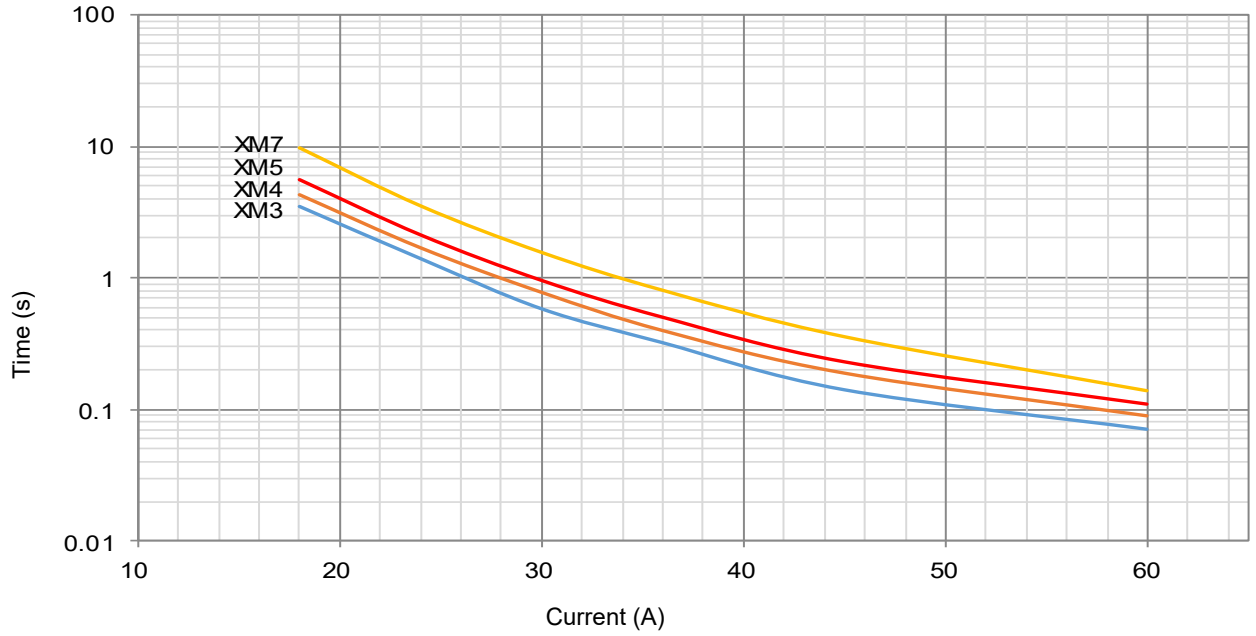

All Rights Reserved by Xiamen SET Electronics Co., Ltd. 2024-2026 V1.1

Packaging Information

Bulk

Item	Box	Carton
Dimensions (mm)	170 × 117 × 50	490 × 365 × 260
Quantity (PCS)	1000	40000
Gross Weight (kg)		17.3 ± 10%

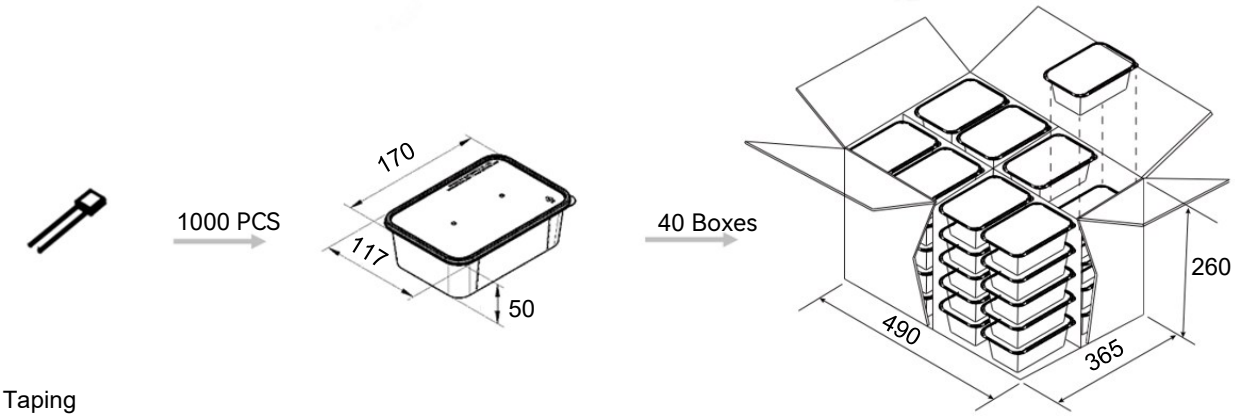

Taping

Item	Box	Carton
Dimensions (mm)	328 × 200 × 70	480 × 340 × 220
Quantity (PCS)	2000	12000
Gross Weight (kg)		6.5 ± 10%

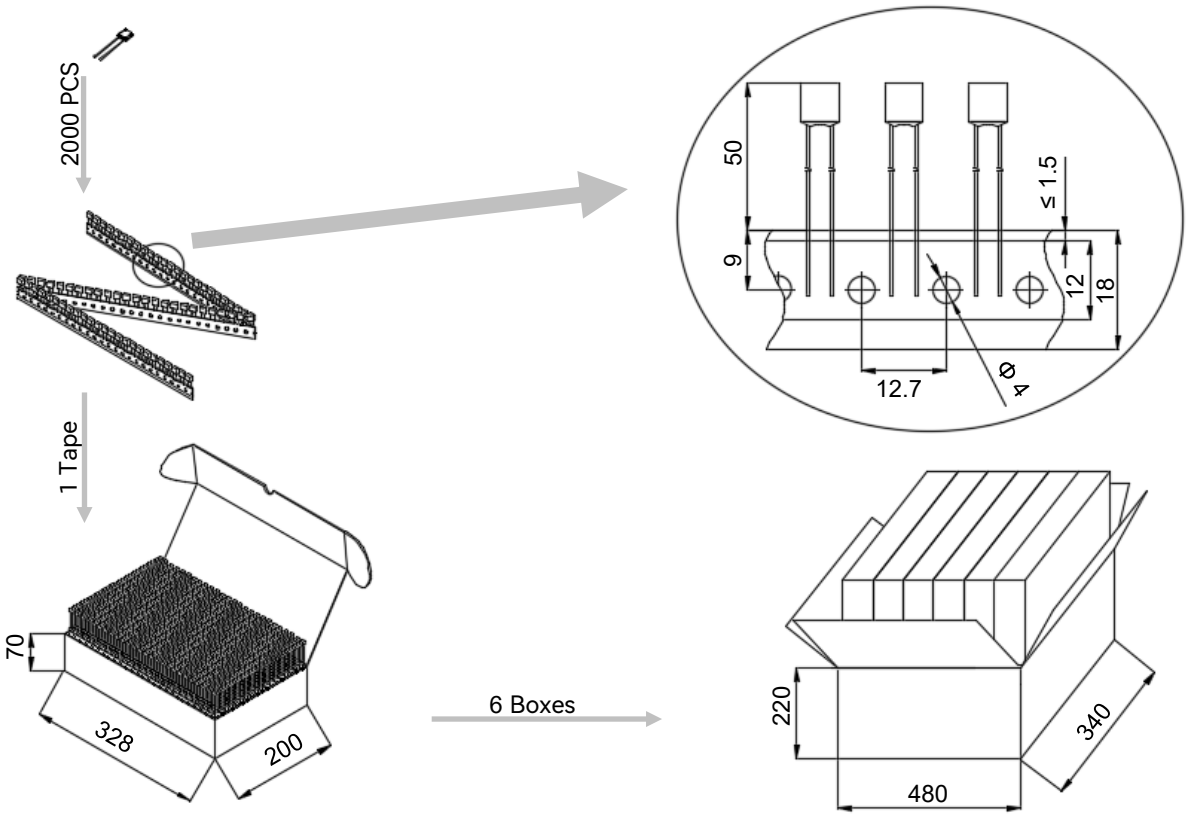

All Rights Reserved by Xiamen SET Electronics Co., Ltd. 2024-2026 V1.1

Part Numbering System

ATCO - XM 3 - A N N A B - 001

Other Options

Packing

B	Bulk
T	Taping

Leads Forming

A	Straight Lead
B	Single Lead Bending
C	Leads Bending
D	Leads Kinking
E	Leads Bending and Kinking

Color of Insulation Tube

W	White
Y	Yellow
R	Red
K	Black
N	None

Insulation Tube Material

T	Teflon
P	Polyester
N	None

Lead Wire Type

A	Tinned Copper Wire
B	Tinned Copper Plated Wire

Rated Functioning Temp.

3	125 °C, See Specifications

Series

XM	Series See Specifications

Product Category

ATCO	Alloy Thermal-Link

All Rights Reserved by Xiamen SET Electronics Co., Ltd. 2024-2026 V1.1

Thermal-Link (ATCO)-Alloy Type

Y Series

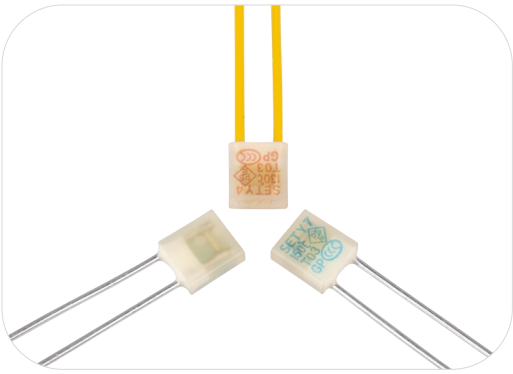

Description

Thermal-Link (ATCO)-Alloy Type is defined as a non-resettable protective device functioning one time only. It is widely used in electrical equipment. ATCO is mainly consist of fusible alloy, flux resin, case, sealant and lead wires. Normally, fusible alloy is jointed to the two lead wires. Under abnormal conditions, when the temp. reaches to the fusing temp. of ATCO, the fusible alloy melts and quickly retracts to the two lead wire ends with the aid of the flux resin and disconnects the circuit completely.

SETsafe | SETfuse Thermal-Link (ATCO)-Alloy Type Y series Rated Functioning Temp. from 76 ℃ to 187 ℃, Rated Current: 5 A, safety certification Includes UL, cUL, TUV, PSE, VDE, KC, CCC, and complies with RoHS and REACH.

Features

- Non-Resettable
- High Accuracy of Functioning Temp.
- RoHS & REACH Compliant

Applications

- Lamps
- Switched-Mode Power Supplies
- Home Electrical Appliances
- Power Strips
- Batteries

Customization

- Other Temp.
- The Length of Lead Wires
- Taping Packing Available
- Lead Wires can be Insulated
- Tinned Copper Wires or CP Wires
- Leads Forming Types

Structure Diagrams

Radial

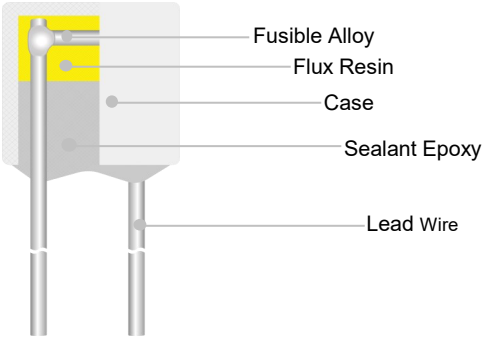

Marking

Radial (Color for reference only)

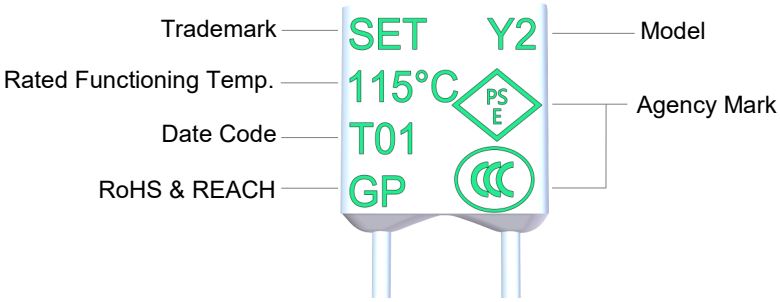

Remark: The Date Code means Year and quarter: A stands for 2000, B stands for 2001 and 01 stands for the first quarter, 02 stands for the second quarter, and so on.

Dimensions (mm)

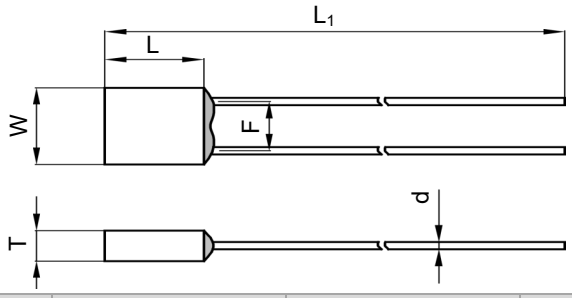

L	L_1	W	T	d	F
7.0 ± 0.5	70.0 ± 3.0	6.6 ± 0.5	2.7 ± 0.2	0.80 ± 0.05	4.0 ± 0.5

All Rights Reserved by Xiamen SET Electronics Co., Ltd. 2024-2026 V1.1

Specifications

Rated Functioning Temp. (T_f) °C

	Model	Fusing Temp. (°C)	T_h (°C)	T_m (°C)	I_r (A)	U_r (V)	I_n 8 / 20 μs (15 Times) (kA)	I_{max} 8 / 20 μs (1 Time) (kA)	UL	cUL	TUV	VDE	PSE	KC	CCC	RoHS REACH
187	Y17	182 ± 3	160	200	5	AC 250	3.5	7	○	○	●	○	●	○	○	●
160	Y16	154 ± 2	133	200	5	AC 250	3.5	7	○	○	○	○	●	○	●	●
150	Y7	145 ± 2	123	200	5	AC 250	3	6	●	●	●	●	●	●	●	●
						AC 300	3	6	●	●	●	○	●	○	○	●
145	Y6	140 ± 2	118	200	5	AC 250	3	6	●	●	○	○	●	○	○	●
136	Y9	131 ± 2	111	200	5	AC 250	3	6	●	●	●	●	●	●	●	●
						AC 300			●	●	●	○	●	○	○	●
133	Y8	130 ± 2	108	200	5	AC 250	3	6	●	●	○	●	●	●	●	●
130	Y4	125 ± 2	103	200	5	AC 250	3	6	●	●	●	●	●	●	●	●
						AC 300			●	●	●	○	●	○	○	●
125	Y3	121 ± 2	98	200	5	AC 250	3	6	●	●	○	●	●	●	●	●
115	Y2	111 ± 2	89	200	5	AC 250	3	6	●	●	○	●	●	●	●	●
102	Y1	98 ± 3	77	200	5	AC 250	2	4	●	●	●	○	●	●	●	●
86	Y18	81 ± 3	61	200	5	AC 250	2	4	●	●	●	○	●	○	●	●
76	Y0	73 ± 2	53	200	5	AC 250	2	4	●	●	●	○	●	○	●	●

Note:

1: "●"Means certificated, "○"Means non-certificated, RoHS & REACH Compliant .

2: " * "Customizable DC voltage.

All Rights Reserved by Xiamen SET Electronics Co., Ltd. 2024-2026 V1.1

Agency Information

Agency Symbol	Standards	The File No. and certification No. obtained by SETsafe | SETfuse
	UL 60691	E214712
	CAN-CSA-E60691	E214712
	EN 60691	R50408477、R50134734
	EN 60691	40017057
	J60691	JET2121-32001-2021、JET2121-32001-2022 JET2121-32001-2023、JET2121-32001-2024 JET2121-32001-2025、JET2121-32001-2026 JET2121-32001-2027、JET2121-32001-2028
	K60691	SU05023-6002A、SU05023-6003B
	GB 9816.1	2020980205000188

Soldering

Hand-Soldering

1. Soldering should be carried out according to Table XM-1.
2. The thermal element of ATCO is fusible alloy with low melting point, which is jointed with ATCO lead wires. Improper soldering operation (too high soldering temp. , too long soldering time, too short lead wire etc.) may transfer more heat to the thermal element and ATCO may open in advance.
3. When soldering conditions are more severe than those listed in Table XM-1, a heat sink fixture should be used between soldering point and ATCO body.
4. When soldering, please do not pull / push or twist ATCO body or lead wires.
5. After soldering, let it naturally cool for longer than 20 seconds. During cooling, never move the ATCO body or lead wires.

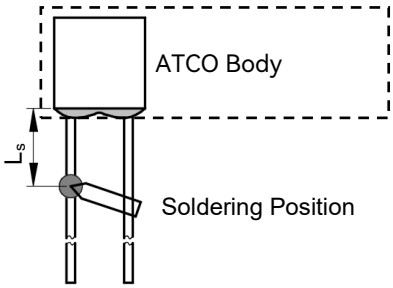

FIGURE XM-1

TABLE XM-1 Hand-Soldering Time

Rated Functioning Temp. (T_f)	Max. Allowable Soldering Time for Different Lead Wire Length (Fig.XM-1)									Max. Soldering Temp.
	L_s Length	Time		L_s Length	Time		L_s Length	Time		
		Tinned Copper Wire	CP Wire		Tinned Copper Wire	CP Wire		Tinned Copper Wire	CP Wire	
(°C)	(mm)	(s)	(s)	(mm)	(s)	(s)	(mm)	(s)	(s)	(°C)
76 to 101	10	1[a]	4	20	2	5	30	3	6	400
102 to 115	10	1[a]	4	20	2	5	30	3	6	
116 to 135	10	1[a]	4	20	3	6	30	5	8	
136 to 150	10	3	6	20	5	8	30	5	8	
151 to 187	10	4	7	20	6	9	30	7	10	

Note:
a: Auxiliary Heat Sink Fixture is Required to Avoid ATCO Cutting off Unexpectedly.

All Rights Reserved by Xiamen SET Electronics Co., Ltd. 2024-2026 V1.1

Wave Soldering

The wave soldering parameters as Table XM-2, for reference only, when ATCO is for practice use, you need to do some validation experiments. For example, using X-RAY to see the fusible alloy of ATCO whether damage after wave soldering.

TABLE XM-2 Wave Soldering Parameters Setting

Rated Functioning Temp. (T_f)	Max. Allowable Preheating Temp. When the Length of Lead Wire is Different (Fig.XM-1)				Preheating Time (t_1)	Max. Wave Soldering Temp.	Dwelling Time (t_2)	Cooling Time (t_3)
	L_s Length	Preheating Temp.	L_s Length	Preheating Temp.				
(°C)	(mm)	(°C)	(mm)	(°C)	(s)	(°C)	(s)	(s)
76 to 130	Recommend Hand-Soldering							
131 to 150	20	80	30	90	< 60	≤ 260	≤ 3	≤ 10
151 to 187	20	90	30	100	< 60	≤ 260	≤ 3	≤ 10

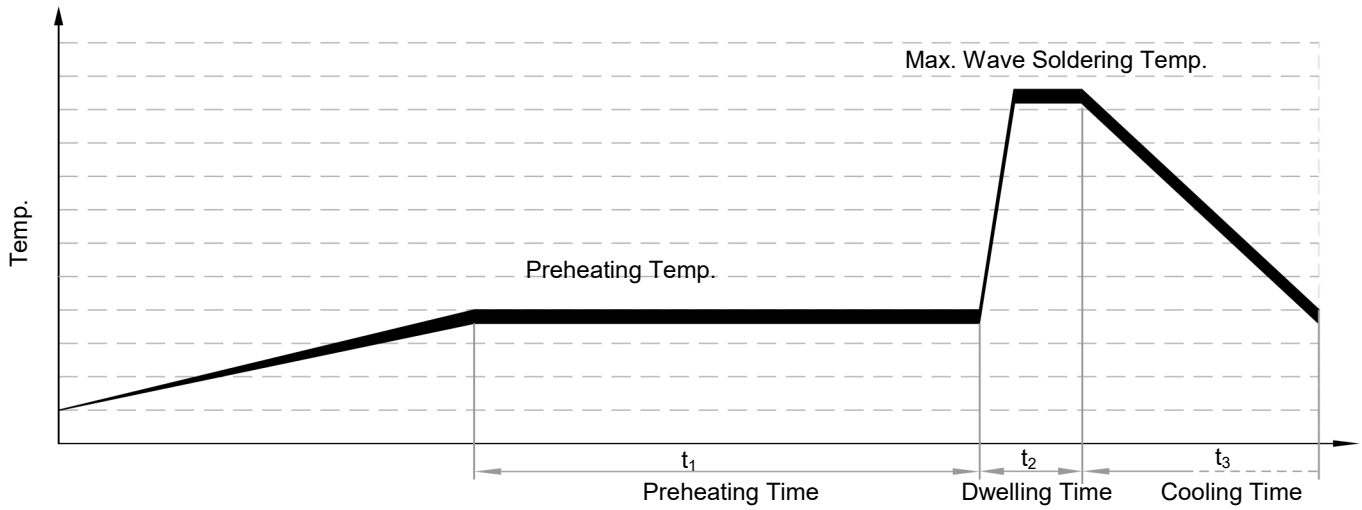

All Rights Reserved by Xiamen SET Electronics Co., Ltd. 2024-2026 V1.1

Product Temp.-Time Curve (Reference)

The Temp.-Time Curve of Thermal-Link in different temp. oil bath.

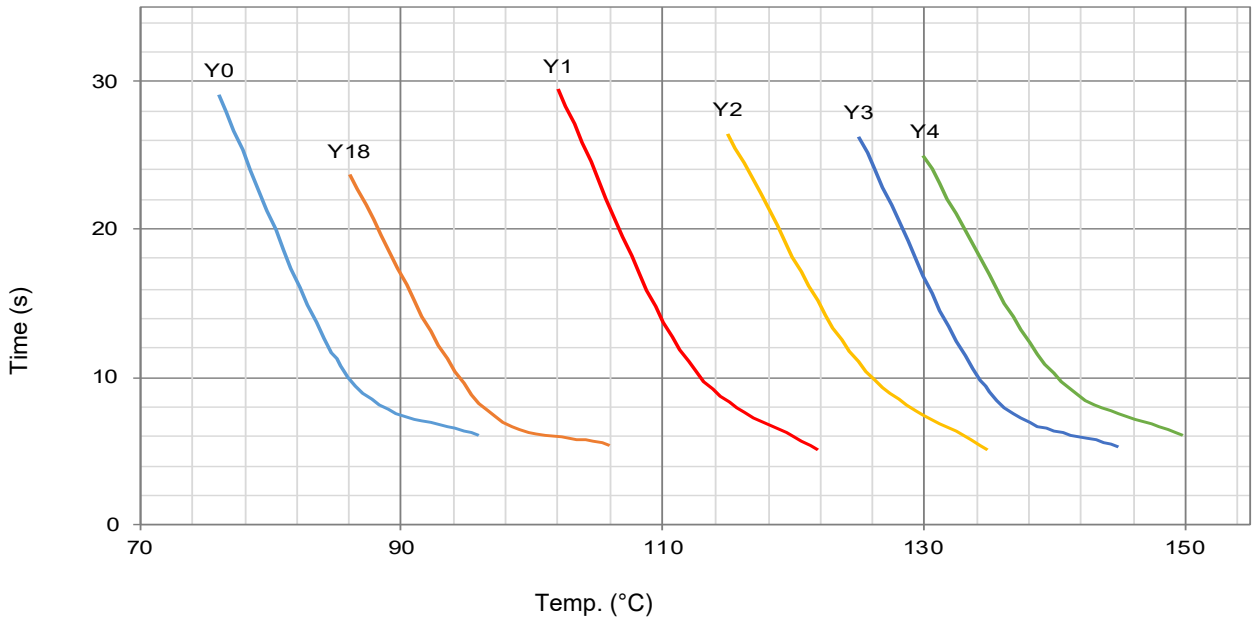

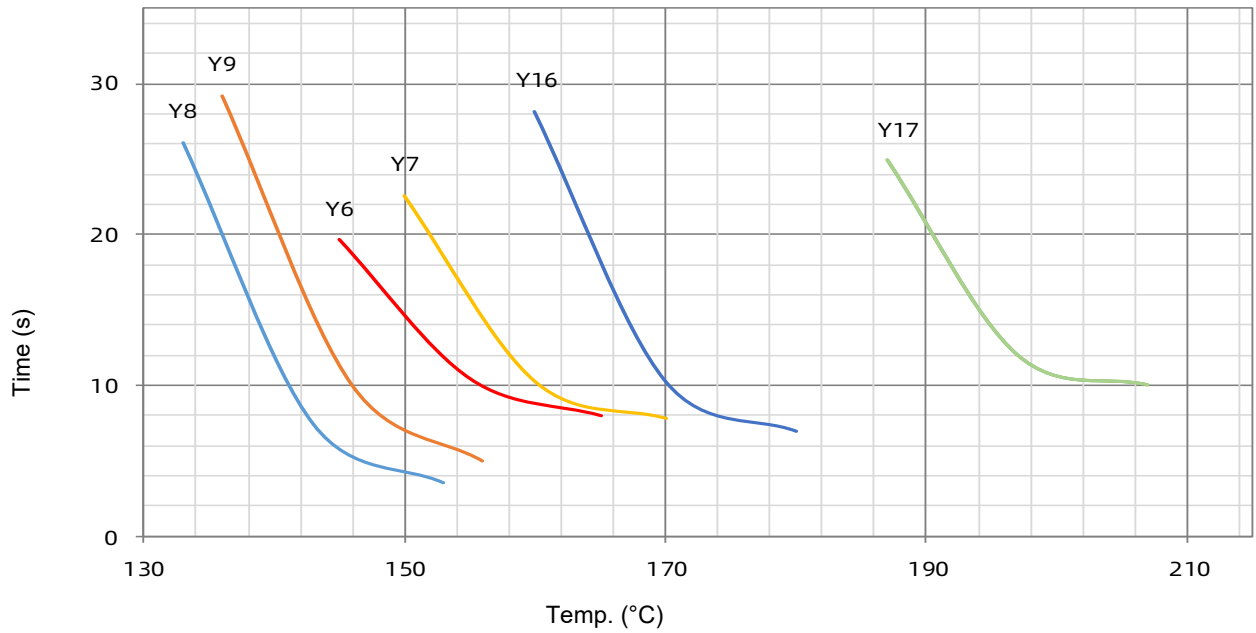

All Rights Reserved by Xiamen SET Electronics Co., Ltd. 2024-2026 V1.1

Product Current-Time Curve (Reference)

The Current-Time Curve shows functioning time at multi-times rated current at room temperature 25 ± 2 °C.

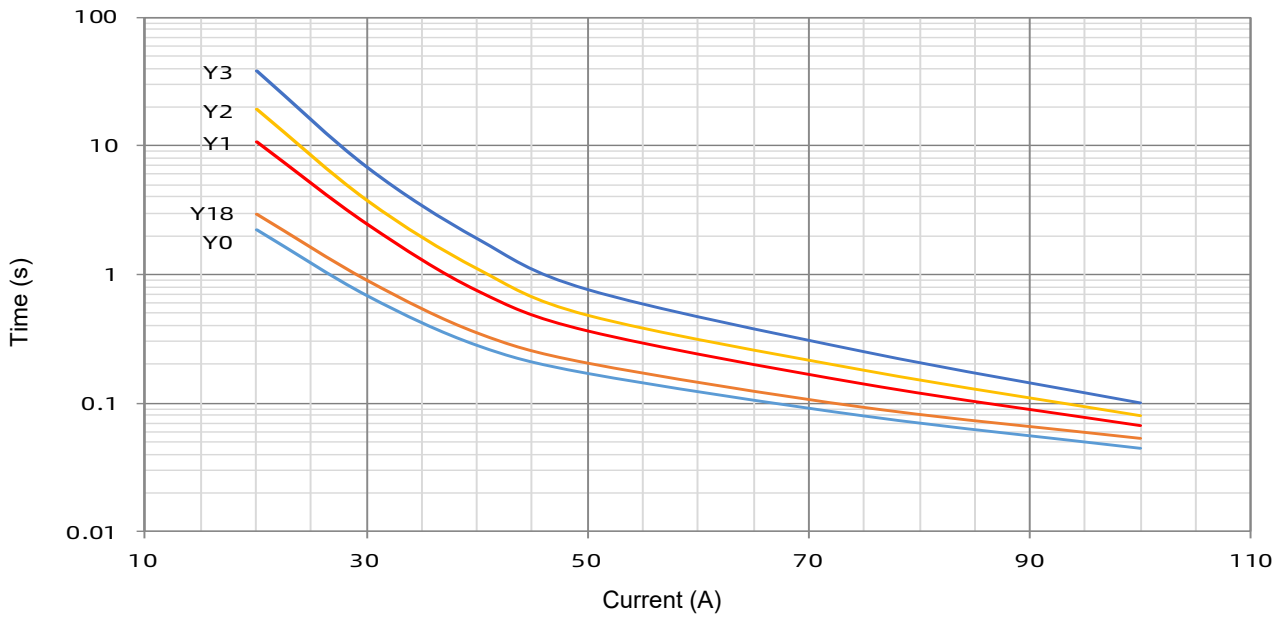

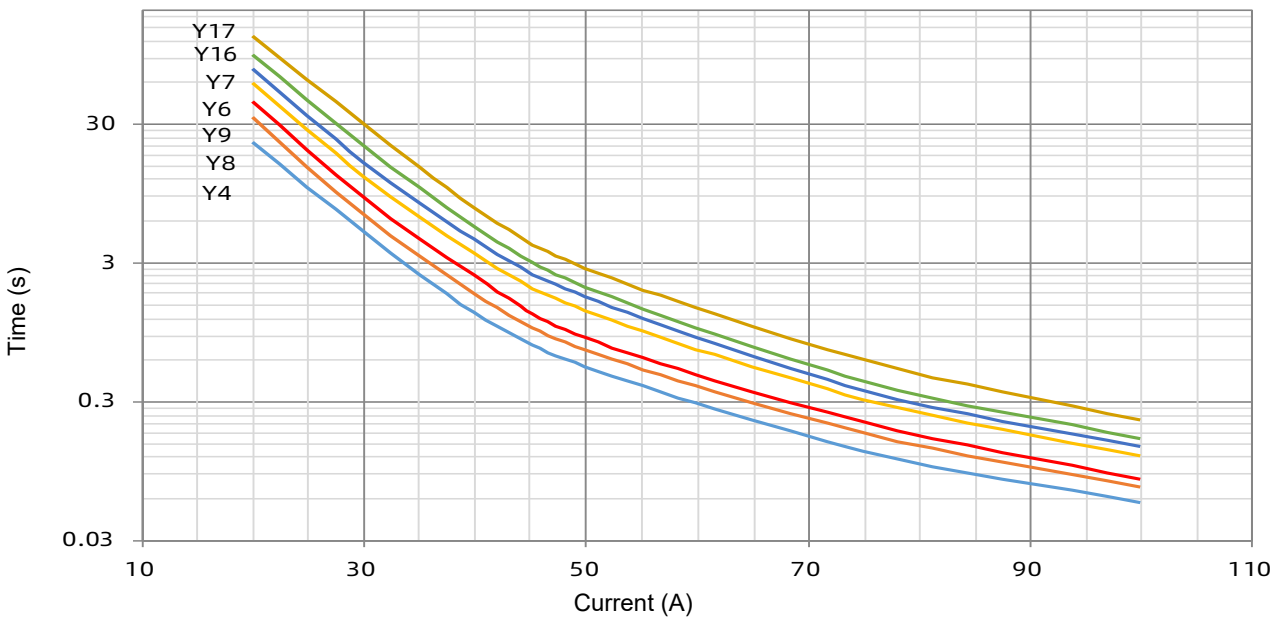

All Rights Reserved by Xiamen SET Electronics Co., Ltd. 2024-2026 V1.1

Packaging Information

Bulk

Item	Box	Carton
Dimensions (mm)	170 × 117 × 50	490 × 365 × 260
Quantity (PCS)	500	16000
Gross Weight (kg)		14.06 ± 10%

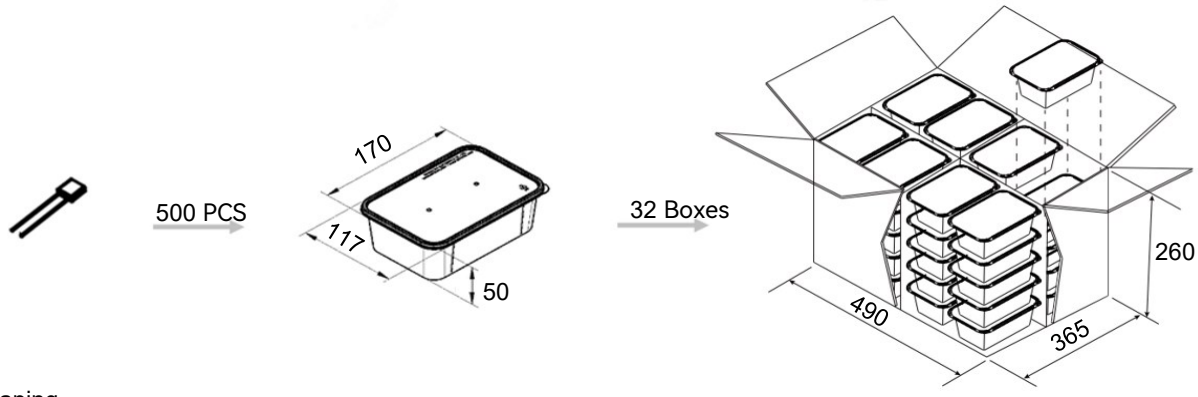

Taping

Item	Box	Carton
Dimensions (mm)	328 × 200 × 70	480 × 340 × 220
Quantity (PCS)	2000	12000
Gross Weight (kg)		9 ± 10%

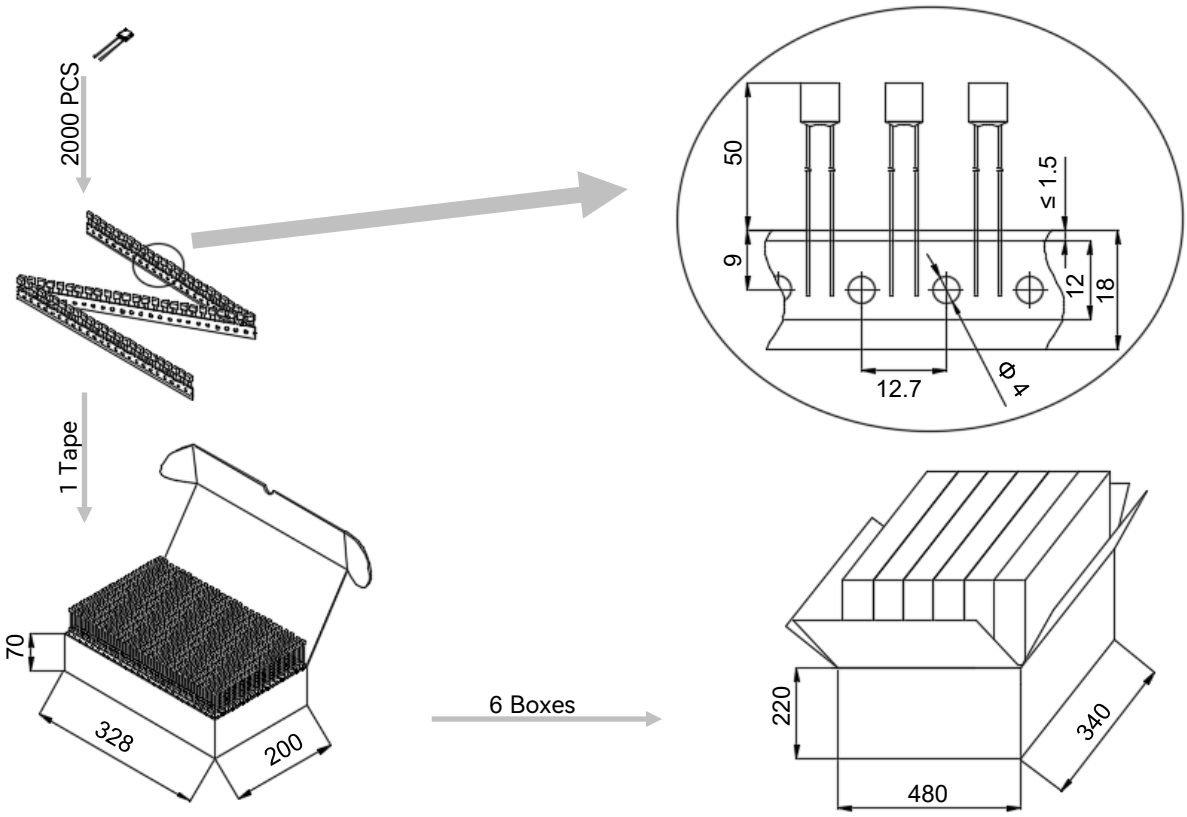

All Rights Reserved by Xiamen SET Electronics Co., Ltd. 2024-2026 V1.1

Part Numbering System

ATCO - Y 2 - A N N A B - 001

Other Options

Packing

B	Bulk
T	Taping

Leads Forming

A	Straight Lead
B	Single Lead Bending
C	Leads Bending
D	Leads Kinking
E	Leads Bending and Kinking

Color of Insulation Tube

W	White
Y	Yellow
R	Red
K	Black
N	None

Insulation Tube Material

T	Teflon
P	Polyester
N	None

Lead Wire Type

A	Tinned Copper Wire
B	Tinned Copper Plated Wire

Rated Functioning Temp.

2	115 °C, See Specifications

Series

Y	Series See Specifications

Product Category

ATCO	Alloy Thermal-Link

All Rights Reserved by Xiamen SET Electronics Co., Ltd. 2024-2026 V1.1

Thermal-Link (ATCO)-Alloy Type

YM Series

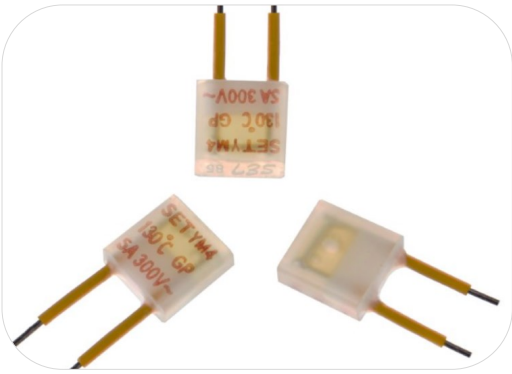

Description

Thermal-Link (ATCO)-Alloy Type is defined as a non-resettable protective device functioning one time only. It is widely used in electrical equipment. ATCO is mainly consist of fusible alloy, flux resin, case, sealant and lead wires. Normally, fusible alloy is jointed to the two lead wires. Under abnormal conditions, when the temp. reaches to the fusing temp. of ATCO, the fusible alloy melts and quickly retracts to the two lead wire ends with the aid of the flux resin and disconnects the circuit completely.

SETsafe | SETfuse Thermal-Link (ATCO)-Alloy Type YM series Rated Functioning Temp. from 130 ℃ to 150 ℃, Rated Current: 5 A, safety certification Includes UL, cUL, TUV, PSE, VDE, KC, CCC, and complies with RoHS and REACH.

Features

- Non-Resettable
- High Accuracy of Functioning Temp.
- RoHS & REACH Compliant

Applications

- Lamps
- Switched-Mode Power Supplies
- Home Electrical Appliances
- Power Strips
- Batteries

Customization

- Other Temp.
- The Length of Lead Wires
- Taping Packing Available
- Lead Wires can be Insulated
- Tinned Copper Wires or CP Wires
- Leads Forming Types

Structure Diagrams

Radial

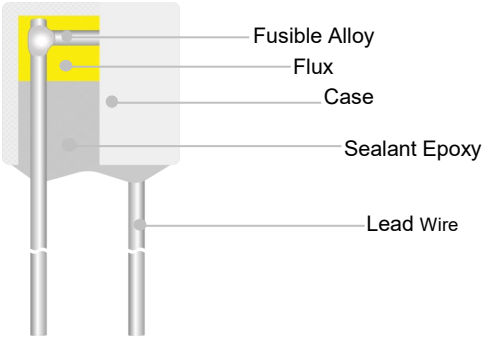

Marking

Radial (Color for reference only)

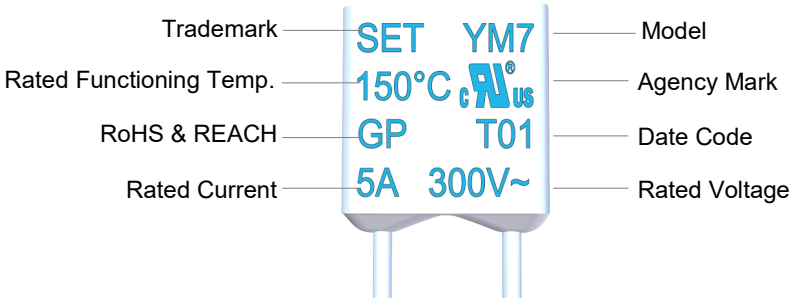

Remark: The Date Code means Year and quarter: A stands for 2000, B stands for 2001 and 01 stands for the first quarter, 02 stands for the second quarter, and so on.

Dimensions (mm)

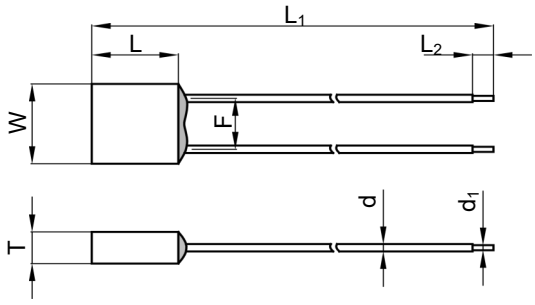

L	L_1	L_2	W	T	d	d_1	F
7.0 ± 0.5	50.0 ± 2.0	5.0 ± 1.0	6.6 ± 0.5	2.7 ± 0.2	1.1 ± 0.1	0.8 ± 0.05	4.0 ± 0.5

All Rights Reserved by Xiamen SET Electronics Co., Ltd. 2024-2026 V1.1

Specifications

Rated Functioning Temp. (T_f) °C	Model	Fusing Temp. (°C)	T_h (°C)	T_m (°C)	I_r (A)	U_r (V)	I_n 8 / 20 μs (15 Times) (kA)	I_{max} 8 / 20 μs (1 Time) (kA)	UL	cUL	TUV	PSE	RoHS REACH
150	YM7	145 ± 2	123	200	5	AC 300	3	6	●	●	●	●	●
						AC 500			●	●	○	●	
						AC 690			●	●	○	●	
136	YM9	131 ± 2	111	200	5	AC 300	3	6	●	●	●	●	●
						AC 500			●	●	○	●	
						AC 690			●	●	○	●	
130	YM4	125 ± 2	103	200	5	AC 300	3	6	●	●	●	●	●
						AC 500			●	●	○	●	
						AC 690			●	●	○	●	

Note:

1: "●"Means certificated, "○"Means non-certificated.

2: RoHS & REACH Compliant .

All Rights Reserved by Xiamen SET Electronics Co., Ltd. 2024-2026 V1.1

Agency Information

Agency Symbol	Standards	The File No. and certification No. obtained by SETsafe | SETfuse
	UL 60691	E214712
	CAN-CSA-E60691	E214712
	EN 60691	R50408477
	J60691	JET2121-32001-2024 、JET2121-32001-2025

Soldering

Hand-Soldering

1. Soldering should be carried out according to Table YM-1.
2. The thermal element of ATCO is fusible alloy with low melting point, which is jointed with ATCO lead wires. Improper soldering operation (too high soldering temp. , too long soldering time, too short lead wire etc.) may transfer more heat to the thermal element and ATCO may open in advance.
3. When soldering conditions are more severe than those listed in Table YM-1, a heat sink fixture should be used between soldering point and ATCO body.
4. When soldering, please do not pull / push or twist ATCO body or lead wires.
5. After soldering, let it naturally cool for longer than 20 seconds. During cooling, never move the ATCO body or lead wires.

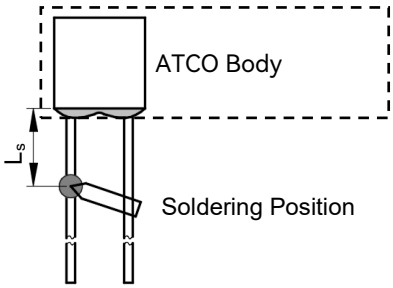

FIGURE YM-1

TABLE YM-1 Hand-Soldering Time

Rated Functioning Temp. (T_f)	Max. Allowable Soldering Time for Different Lead Wire Length (Fig.YM-1)									Max. Soldering Temp.
	L_s Length	Time		L_s Length	Time		L_s Length	Time		
		Tinned Copper Wire	CP Wire		Tinned Copper Wire	CP Wire		Tinned Copper Wire	CP Wire	
(°C)	(mm)	(s)	(s)	(mm)	(s)	(s)	(mm)	(s)	(s)	(°C)
130 to 135	10	1[a]	4	20	3	6	30	5	8	400
136 to 150	10	3	6	20	5	8	30	5	8	

Note:
a: Auxiliary Heat Sink Fixture is Required to Avoid ATCO Cutting off Unexpectedly.

All Rights Reserved by Xiamen SET Electronics Co., Ltd. 2024-2026 V1.1

Wave Soldering

The wave soldering parameters as Table YM-2, for reference only, when ATCO is for practice use, you need to do some validation experiments. For example, using X-RAY to see the fusible alloy of ATCO whether damage after wave soldering.

TABLE YM-2 Wave Soldering Parameters Setting

Rated Functioning Temp. (T_f)	Max. Allowable Preheating Temp. When the Length of Lead Wire is Different (Fig.YM-1)				Preheating Time (t_1)	Max. Wave Soldering Temp.	Dwelling Time (t_2)	Cooling Time (t_3)
	L_s Length	Preheating Temp.	L_s Length	Preheating Temp.				
(°C)	(mm)	(°C)	(mm)	(°C)	(s)	(°C)	(s)	(s)
76 to 130	Recommend Hand-Soldering							
131 to 150	20	80	30	90	< 60	≤ 260	≤ 3	≤ 10

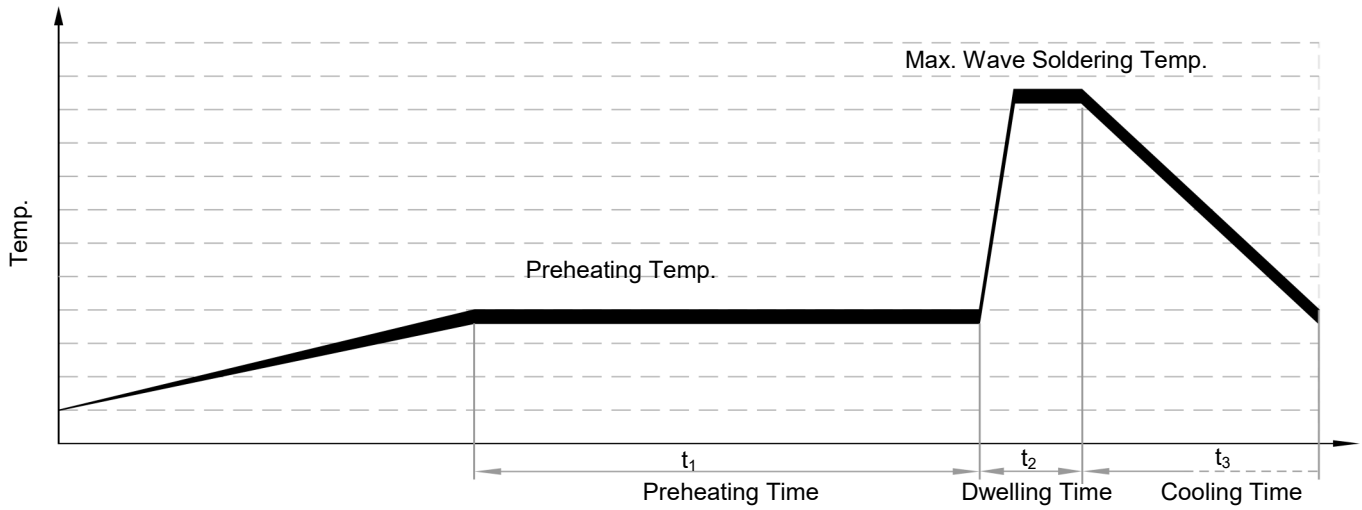

All Rights Reserved by Xiamen SET Electronics Co., Ltd. 2024-2026 V1.1

Product Temp.-Time Curve (Reference)

The Temp.-Time Curve of Thermal-Link in different temp. oil bath.

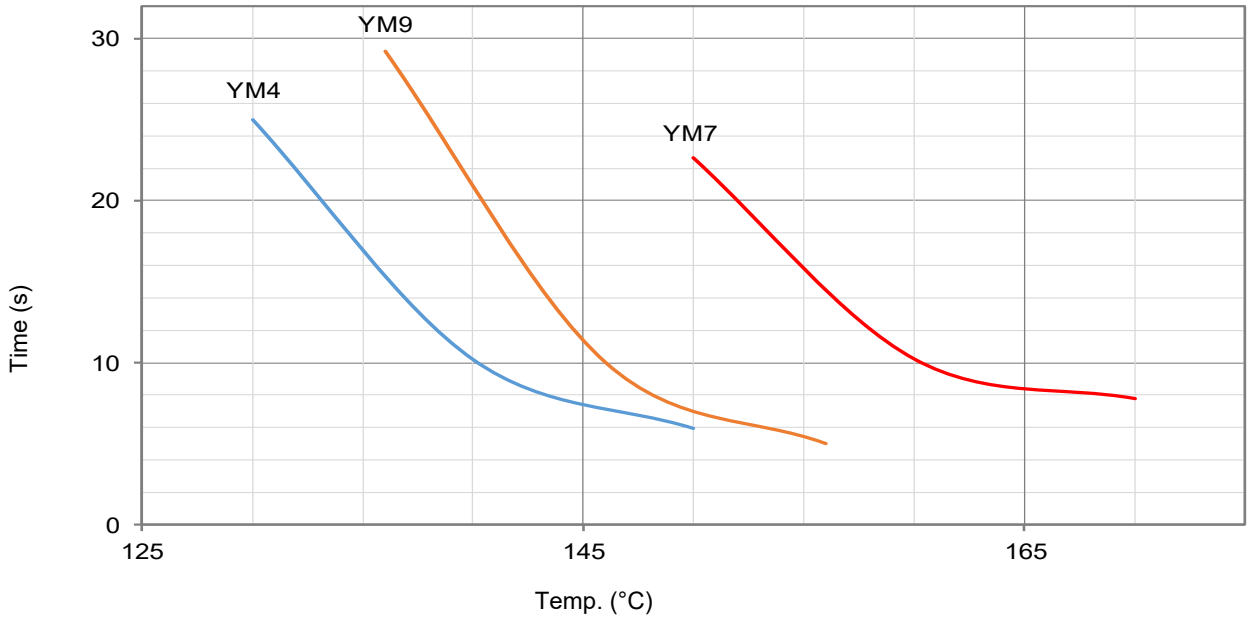

Product Current-Time Curve (Reference)

The Current-Time Curve shows functioning time at multi-times rated current at room temperature 25 ± 2 °C.

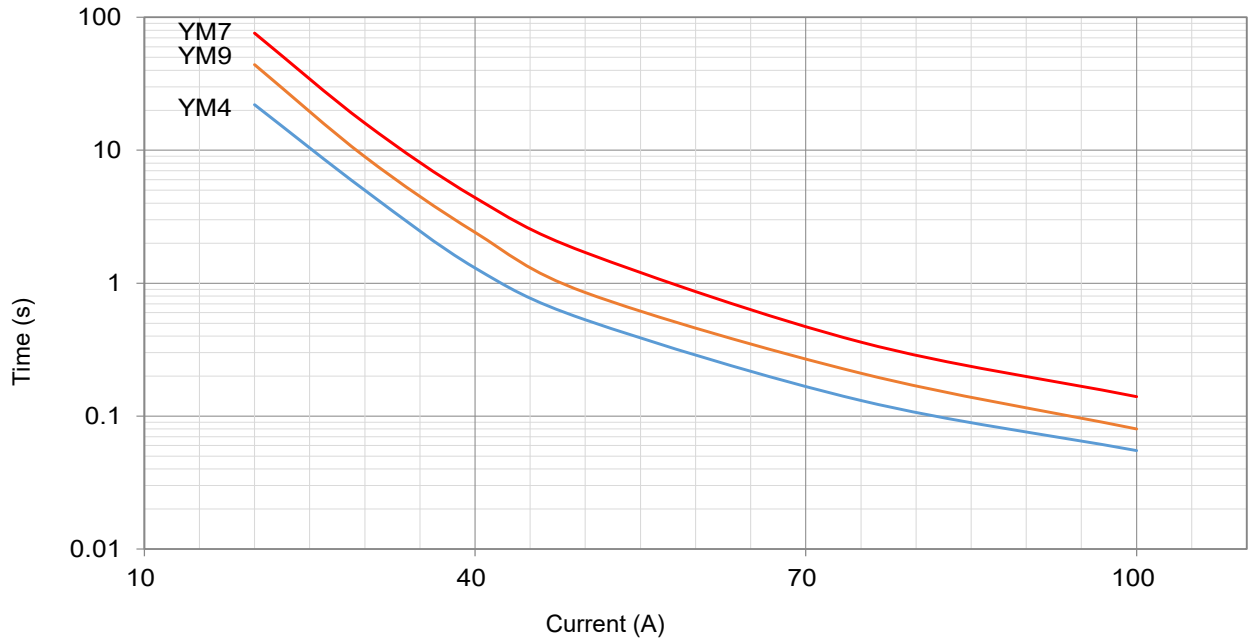

All Rights Reserved by Xiamen SET Electronics Co., Ltd. 2024-2026 V1.1

Packaging Information

Bulk

Item	Box	Carton
Dimensions (mm)	170 × 117 × 50	490 × 365 × 220
Quantity (PCS)	800	25600
Gross Weight (kg)		18.9 ± 10%

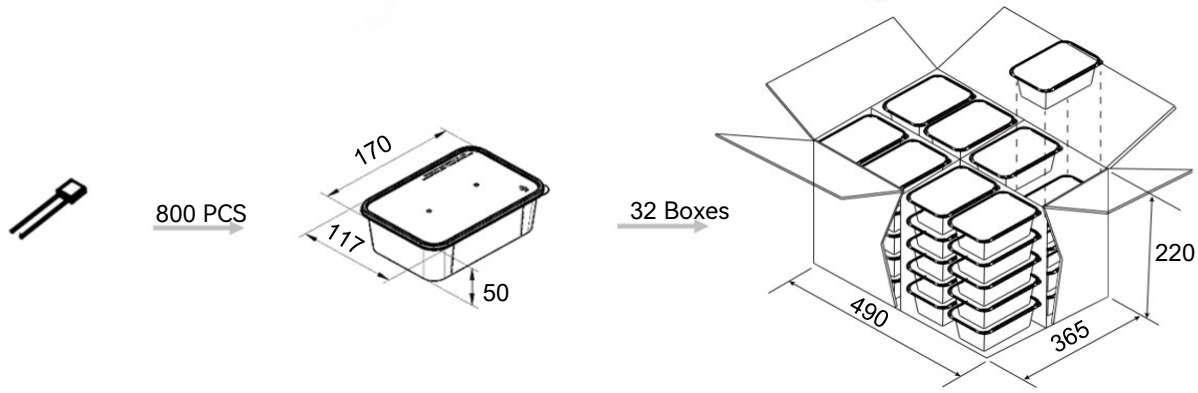

Taping

Item	Box	Carton
Dimensions (mm)	328 × 200 × 70	480 × 340 × 220
Quantity (PCS)	2000	12000
Gross Weight (kg)		8 ± 10%

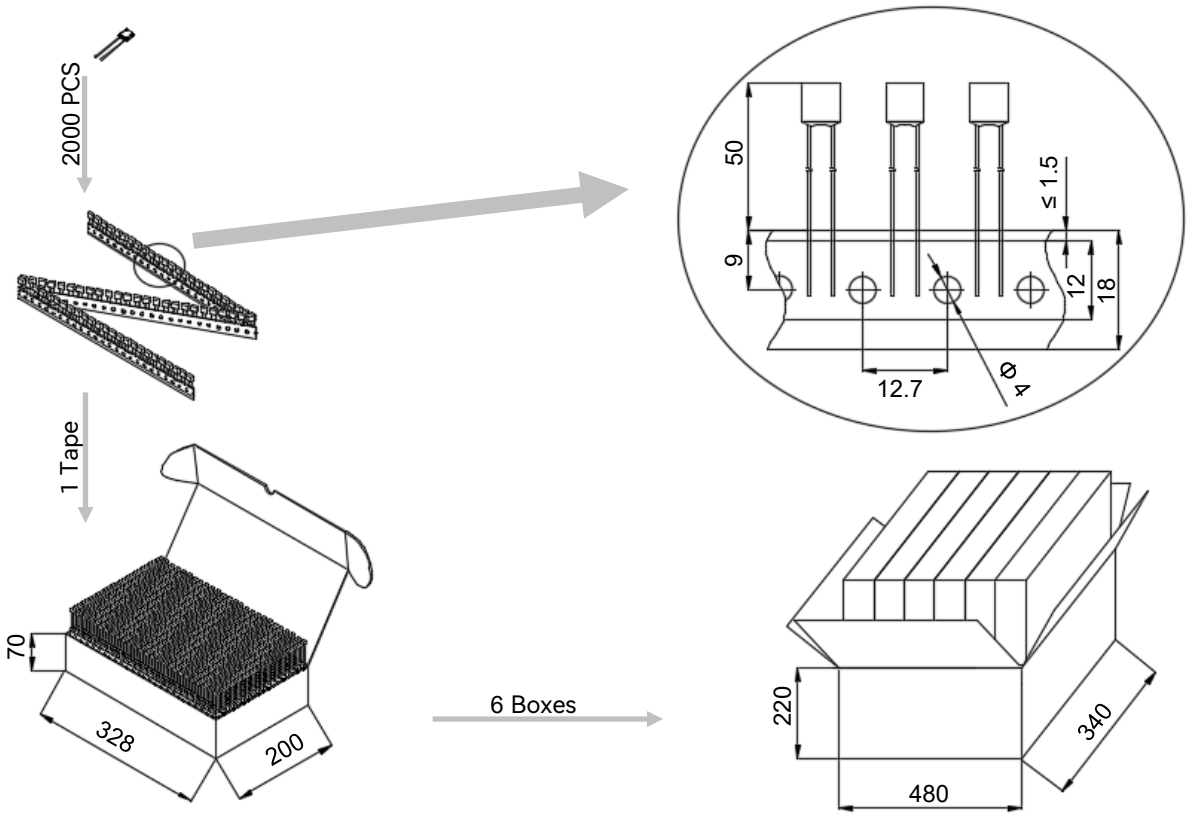

All Rights Reserved by Xiamen SET Electronics Co., Ltd. 2024-2026 V1.1

Part Numbering System

ATCO -YM 7 - A N N A B - 001

Other Options

Packing

B	Bulk
T	Taping

Leads Forming

A	Straight Lead
B	Single Lead Bending
C	Leads Bending
D	Leads Kinking
E	Leads Bending and Kinking

Color of Insulation Tube

W	White
Y	Yellow
R	Red
K	Black
N	None

Insulation Tube Material

T	Teflon
P	Polyester
N	None

Lead Wire Type

A	Tinned Copper Wire
B	Tinned Copper Plated Wire

Rated Functioning Temp.

7	150 °C, See Specifications

Series

YM	Series See Specifications

Product Category

ATCO	Alloy Thermal-Link

All Rights Reserved by Xiamen SET Electronics Co., Ltd. 2024-2026 V1.1

Thermal-Link (ATCO)-Alloy Type

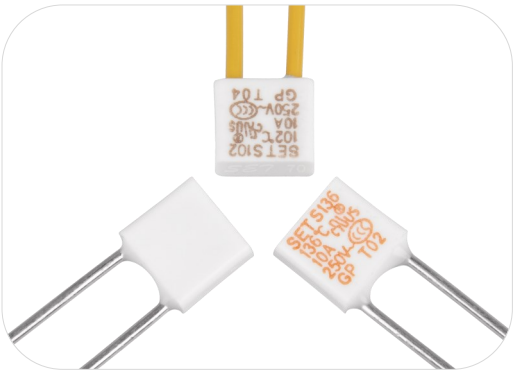

Description

Thermal-Link (ATCO)-Alloy Type is defined as a non-resettable protective device functioning one time only. It is widely used in electrical equipment. ATCO is mainly consist of fusible alloy, flux resin, case, sealant and lead wires. Normally, fusible alloy is jointed to the two lead wires. Under abnormal conditions, when the temp. reaches to the fusing temp. of ATCO, the fusible alloy melts and quickly retracts to the two lead wire ends with the aid of the flux resin and disconnects the circuit completely.

SETsafe | SETfuse Thermal-Link (ATCO)-Alloy Type S series Rated Functioning Temp. from 102 ℃ to 150 ℃, Rated Current: 10 A, safety certification Includes UL, cUL, TUV, PSE, VDE, CCC, and complies with RoHS and REACH.

Features

- Non-Resettable
- High Accuracy of Functioning Temp.
- High Surge Capacity
- RoHS & REACH Compliant

Applications

- Surge Protective Devices
- Power Strips
- Lamps
- Switched-Mode Power Supplies
- Home Electrical Appliances
- Batteries

Customization

- Other Temp.
- The Length of Lead Wires
- Taping Packing Available
- Lead Wires can be Insulated
- Leads Forming Types

Structure Diagrams

Radial

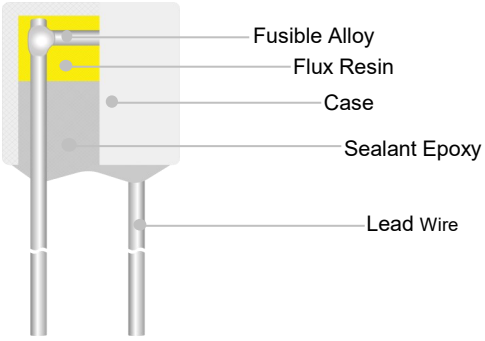

Marking

Radial (Color for reference only)

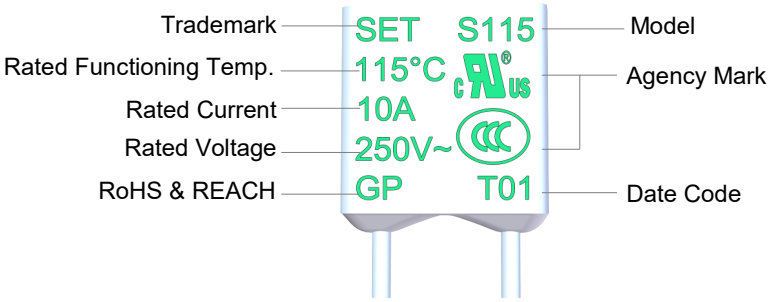

Remark: The Date Code means Year and quarter: A stands for 2000, B stands for 2001 and 01 stands for the first quarter, 02 stands for the second quarter, and so on.

Dimensions (mm)

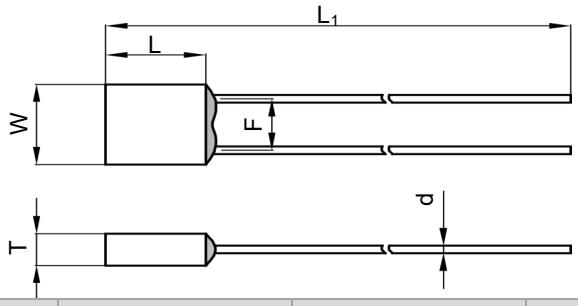

L	L_1	W	T	d	F
7.5 ± 0.5	35.0 ± 2.0	8.3 ± 0.5	3.4 ± 0.2	1.05 ± 0.05	5.2 ± 0.5

All Rights Reserved by Xiamen SET Electronics Co., Ltd. 2024-2026 V1.1

Specifications

Rated Functioning Temp. (T_f) °C

	Model	Fusing Temp. (°C)	T_h (°C)	T_m (°C)	I_r (A)	U_r (V)	I_n 8 / 20 μs (15 Times) (kA)	I_{max} 8 / 20 μs (1 Time) (kA)	UL	cUL	TUV	VDE	PSE	CCC	RoHS REACH
150	S150	145 ± 2	118 106[a]	200	10	AC 250	5	10	●	●	●	○	●	●	●
						AC 125			●	●	○	○	●	○	
						DC 100			●	●	○	○	○	○	
136	S136	131 ± 2	106 101[a]	200	10	AC 250	5	10	●	●	○	●	●	●	●
						AC 125			●	●	○	○	●	○	
						DC 100			●	●	○	○	○	○	
125	S125	121 ± 2	95 83[a]	200	10	AC 250	5	10	○	○	●	○	●	●	●
115	S115	111 ± 2	85 73[a]	200	10	AC 250	5	10	●	●	○	●	●	●	●
						AC 125			●	●	○	○	●	○	
						DC 100			●	●	○	○	○	○	
102	S102	98 ± 3	72 61[a]	200	10	AC 250	5	10	●	●	○	●	●	●	●
						AC 125			●	●	○	○	●	○	
						DC 100			●	●	○	○	○	○	

Note:

1: "●"Means certificated, "○"Means non-certificated.

2: RoHS & REACH Compliant .

3: " a ": The temperature measurement point for holding temperature (T_h) shall be positioned 50 mm away from the product body, in accordance with the requirements specified in Appendix H.11.2 of IEC 60691:2015 and Appendix I of GB/T 9816.1-2023.

All Rights Reserved by Xiamen SET Electronics Co., Ltd. 2024-2026 V1.1

Agency Information

Agency Symbol	Standards	The File No. and certification No. obtained by SETsafe | SETfuse
	UL 60691	E214712
	CAN-CSA-E60691	E214712
	EN 60691	R50497013
	EN 60691	40018082
	J60691	JET2121-32001-2029、JET2121-32001-2030、JET2121-32001-2031
	GB 9816.1	2020980205000189

Soldering

Hand-Soldering

1. Soldering should be carried out according to Table S-1.
2. The thermal element of ATCO is fusible alloy with low melting point, which is jointed with ATCO lead wires. Improper soldering operation (too high soldering temp. , too long soldering time, too short lead wire etc.) may transfer more heat to the thermal element and ATCO may open in advance.
3. When soldering conditions are more severe than those listed in Table S-1, a heat sink fixture should be used between soldering point and ATCO body.
4. When soldering, please do not pull / push or twist ATCO body or lead wires.
5. After soldering, let it naturally cool for longer than 20 seconds. During cooling, never move the ATCO body or lead wires.

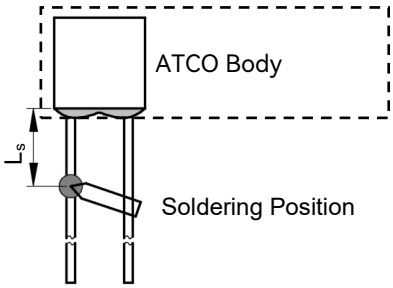

FIGURE S-1

TABLE S-1 Hand-Soldering Time

Rated Functioning Temp. (T_f)	Max. Allowable Soldering Time for Different Lead Wire Length (Fig.S-1)									Max. Soldering Temp.
	L_s Length	Time		L_s Length	Time		L_s Length	Time		
		Tinned Copper Wire	CP Wire		Tinned Copper Wire	CP Wire		Tinned Copper Wire	CP Wire	
(°C)	(mm)	(s)	(s)	(mm)	(s)	(s)	(mm)	(s)	(s)	(°C)
102 to 115	10	1[a]	4	20	2	5	30	3	6	400
116 to 135	10	1[a]	4	20	3	6	30	5	8	
136 to 150	10	3	6	20	5	8	30	5	8	

Note:
a: Auxiliary Heat Sink Fixture is Required to Avoid ATCO Cutting off Unexpectedly.

All Rights Reserved by Xiamen SET Electronics Co., Ltd. 2024-2026 V1.1

Wave Soldering

The wave soldering parameters as Table S-2, for reference only, when ATCO is for practice use, you need to do some validation experiments. For example, using X-RAY to see the fusible alloy of ATCO whether damage after wave soldering.

TABLE S-2 Wave Soldering Parameters Setting

Rated Functioning Temp. (T_f)	Max. Allowable Preheating Temp. When the Length of Lead Wire is Different (Fig.S-1)				Preheating Time (t_1)	Max. Wave Soldering Temp.	Dwelling Time (t_2)	Cooling Time (t_3)
	L_s Length	Preheating Temp.	L_s Length	Preheating Temp.				
(°C)	(mm)	(°C)	(mm)	(°C)	(s)	(°C)	(s)	(s)
102 to 130	Recommend Hand-Soldering							
131 to 150	20	80	30	90	< 60	≤ 260	≤ 3	≤ 10

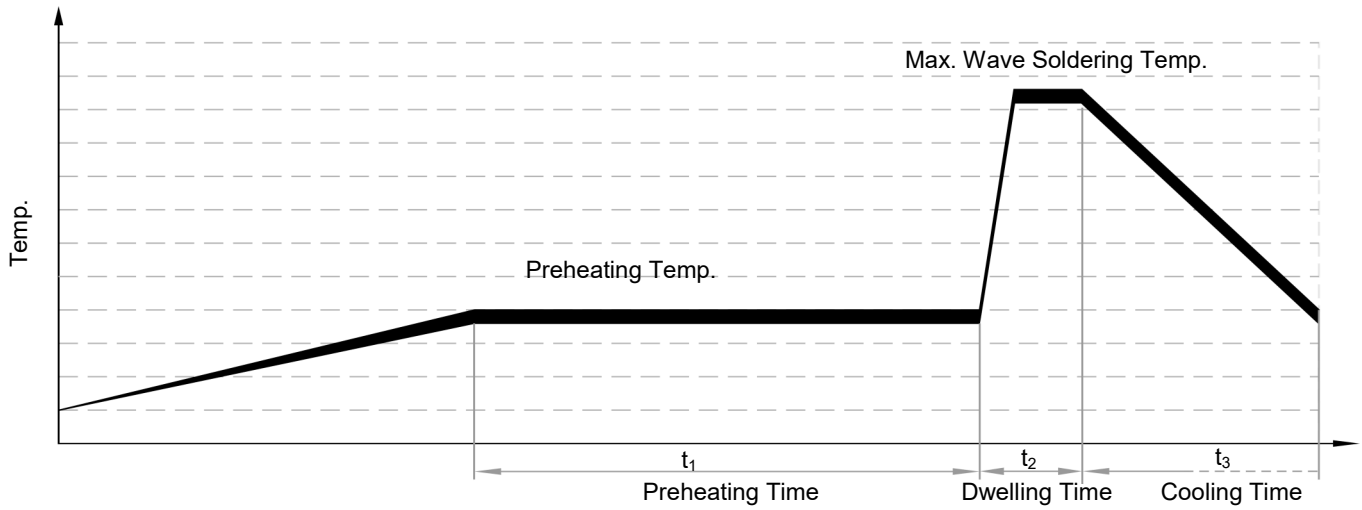

All Rights Reserved by Xiamen SET Electronics Co., Ltd. 2024-2026 V1.1

Product Temp.-Time Curve (Reference)

The Temp.-Time Curve of Thermal-Link in different temp. oil bath.

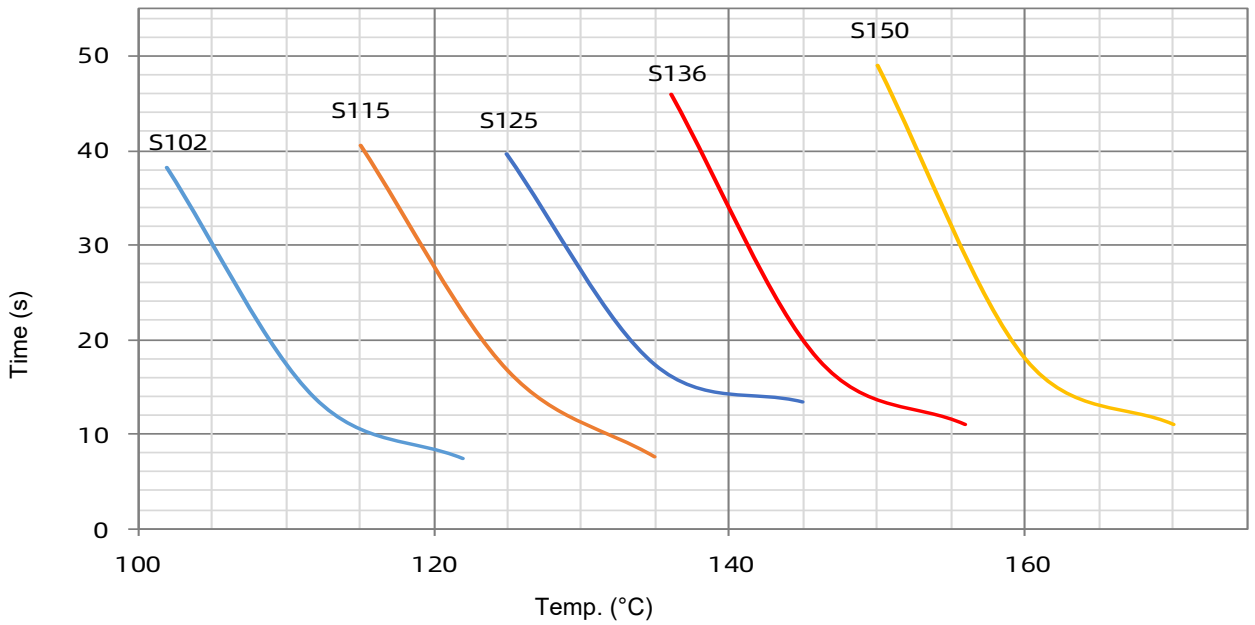

Product Current-Time Curve (Reference)

The Current-Time Curve shows functioning time at multi-times rated current at room temperature 25 ± 2 °C.

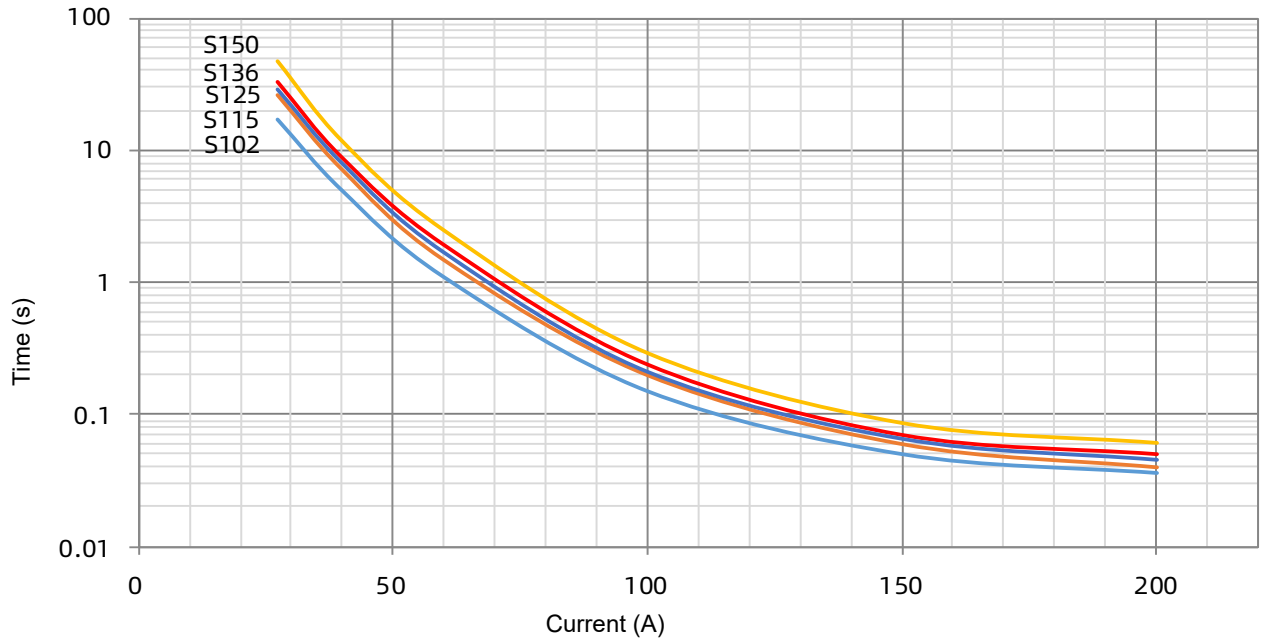

All Rights Reserved by Xiamen SET Electronics Co., Ltd. 2024-2026 V1.1

Packaging Information

Bulk

Item	Box	Carton
Dimensions (mm)	170 × 117 × 50	490 × 365 × 220
Quantity (PCS)	600	19200
Gross Weight (kg)		17.3 ± 10%

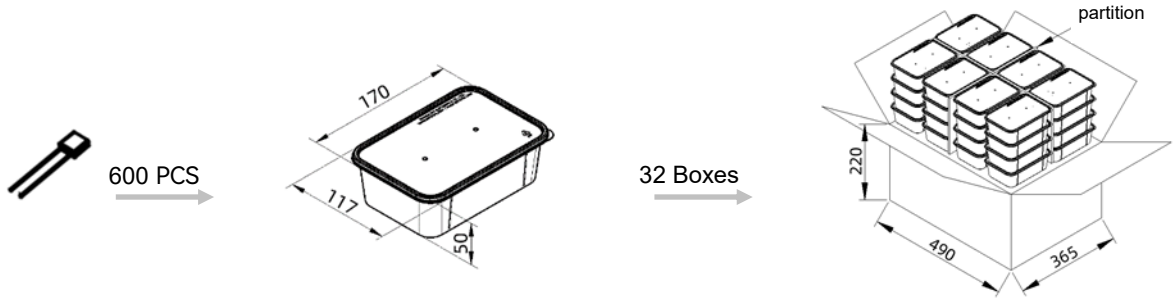

Taping

Item	Box	Carton
Dimensions (mm)	328 × 200 × 70	480 × 340 × 220
Quantity (PCS)	2000	12000
Gross Weight (kg)		12.0 ± 10%

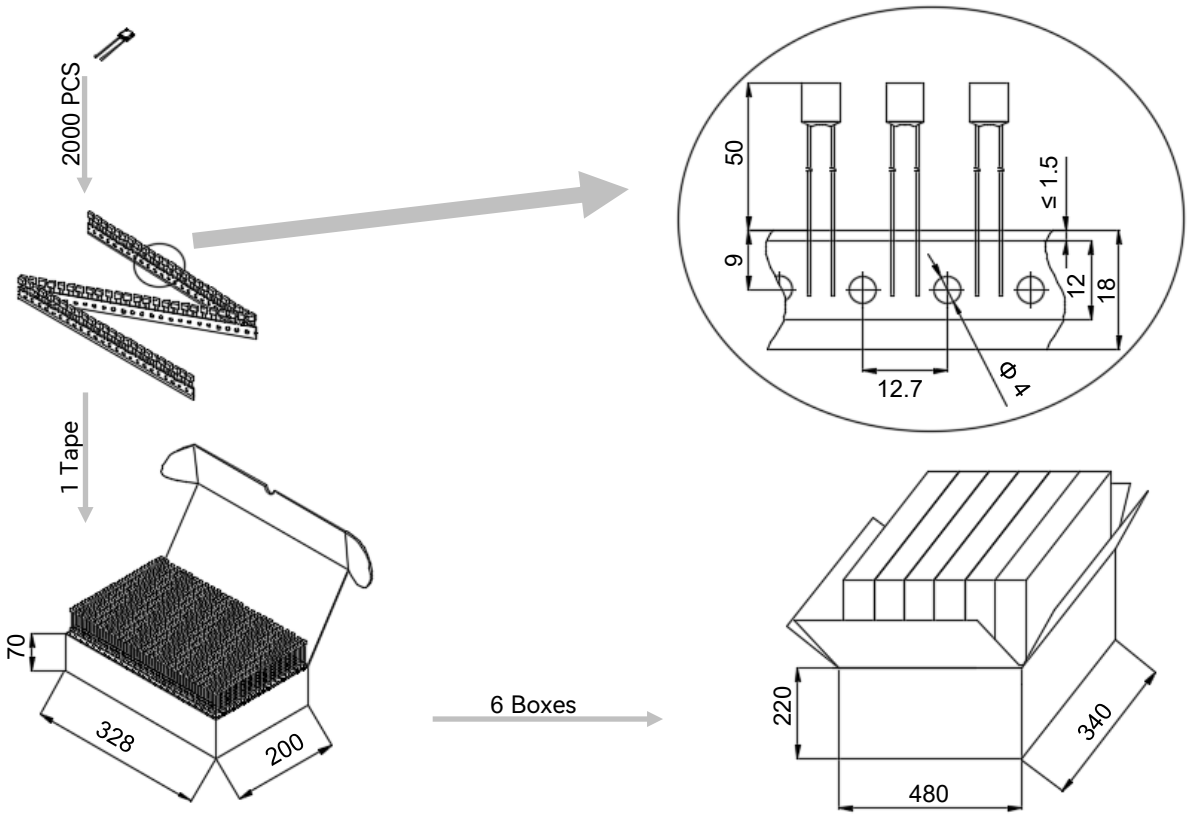

All Rights Reserved by Xiamen SET Electronics Co., Ltd. 2024-2026 V1.1

Part Numbering System

ATCO – S 115 - A N N A B - 001

Other Options

Packing

B	Bulk
T	Taping

Leads Forming

A	Straight Lead
B	Single Lead Bending
C	Leads Bending
D	Leads Kinking
E	Leads Bending and Kinking

Color of Insulation Tube

W	White
Y	Yellow
R	Red
K	Black
N	None

Insulation Tube Material

T	Teflon
P	Polyester
N	None

Lead Wire Type

A	Tinned Copper Wire
B	Tinned Copper Plated Wire

Rated Functioning Temp.

115	115 °C, See Specifications

Series

S	Series See Specifications

Product Category

ATCO	Alloy Thermal-Link

All Rights Reserved by Xiamen SET Electronics Co., Ltd. 2024-2026 V1.1

Thermal-Link (ATCO)-Alloy Type

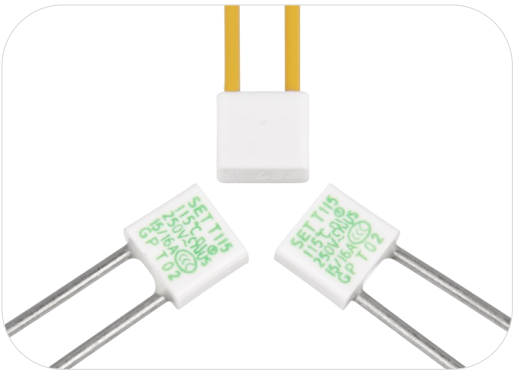

Description

Thermal-Link (ATCO)-Alloy Type is defined as a non-resettable protective device functioning one time only. It is widely used in electrical equipment. ATCO is mainly consist of fusible alloy, flux resin, case, sealant and lead wires. Normally, fusible alloy is jointed to the two lead wires. Under abnormal conditions, when the temp. reaches to the fusing temp. of ATCO, the fusible alloy melts and quickly retracts to the two lead wire ends with the aid of the flux resin and disconnects the circuit completely.

SETsafe | SETfuse Thermal-Link (ATCO)-Alloy Type T series Rated Functioning Temp. from 102 ℃ to 150 ℃, Rated Current: 15 A, 16 A, safety certification Includes UL, cUL, TUV, PSE, VDE, CCC, and complies with RoHS and REACH.

Features

- Non-Resettable
- High Accuracy of Functioning Temp.
- High Surge Capacity
- RoHS & REACH Compliant

Applications

- Surge Protective Devices
- Power Strips
- Lamps
- Switched-Mode Power Supplies
- Home Electrical Appliances
- Batteries

Customization

- Other Temp.
- The Length of Lead Wires
- Taping Packing Available
- Lead Wires can be Insulated
- Leads Forming Types

Structure Diagrams

Radial

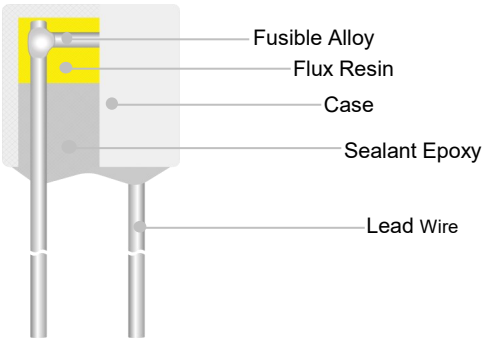

Marking

Radial (Color for reference only)

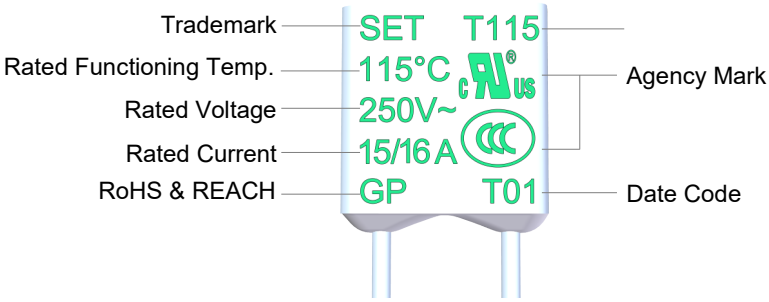

Remark: The Date Code means Year and quarter: A stands for 2000, B stands for 2001 and 01 stands for the first quarter, 02 stands for the second quarter, and so on.

Dimensions (mm)

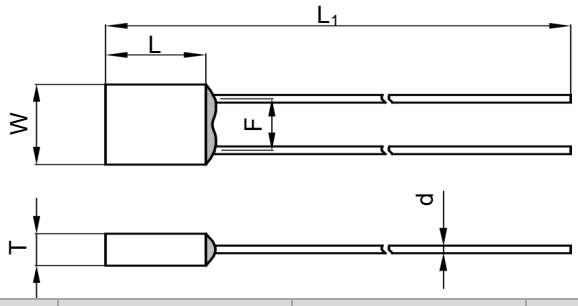

L	L_1	W	T	d	F
7.5 ± 0.5	35.0 ± 2.0	8.3 ± 0.5	3.4 ± 0.2	1.05 ± 0.05	5.2 ± 0.5

All Rights Reserved by Xiamen SET Electronics Co., Ltd. 2024-2026 V1.1

Specifications

Rated Functioning Temp. (T_f) °C

	Model	Fusing Temp. (°C)	T_h (°C)	T_m (°C)	I_r (A)	U_r (V)	I_n 8 / 20 μs (15 Times) (kA)	I_{max} 8 / 20 μs (1 Time) (kA)	UL	cUL	TUV	VDE	PSE	CCC	RoHS REACH
150	T150	145 ± 2	118 106[a]	200	15 / 16	AC 250	6	12	●	●	●	○	●	●	●
						AC 125			●	●	○	○	●	○	
						DC 100			●	●	○	○	○	○	
136	T136	131 ± 2	106 101[a]	200	15 / 16	AC 250	6	12	●	●	○	●	●	●	●
						AC 125			●	●	○	○	●	○	
						DC 100			●	●	○	○	○	○	
125	T125	121 ± 2	95 83[a]	200	15 / 16	AC 250	6	12	○	○	●	○	●	●	●
115	T115	111 ± 2	85 73[a]	200	15 / 16	AC 250	6	12	●	●	○	●	●	●	●
						AC 125			●	●	○	○	●	○	
						DC 100			●	●	○	○	○	○	
102	T102	98 ± 3	72 61[a]	200	15 / 16	AC 250	6	12	●	●	○	●	●	●	●
						AC 125			●	●	○	○	●	○	
						DC 100			●	●	○	○	○	○	

Note:

1: "●"Means certificated, "○"Means non-certificated.

2: RoHS & REACH Compliant .

3: " a ": The temperature measurement point for holding temperature (T_h) shall be positioned 50 mm away from the product body, in accordance with the requirements specified in Appendix H.11.2 of IEC 60691:2015 and Appendix I of GB/T 9816.1-2023.

All Rights Reserved by Xiamen SET Electronics Co., Ltd. 2024-2026 V1.1

Agency Information

Agency Symbol	Standards	The File No. and certification No. obtained by SETsafe | SETfuse
	UL 60691	E214712
	CAN-CSA-E60691	E214712
	EN 60691	R50497013
	EN 60691	40018082
	J60691	JET2121-32001-2029、JET2121-32001-2030 JET2121-32001-2031、JET2121-32001-2032 JET2121-32001-2033、JET2121-32001-2034
	GB 9816.1	2020980205000189

Soldering

Hand-Soldering

1. Soldering should be carried out according to Table T-1.
2. The thermal element of ATCO is fusible alloy with low melting point, which is jointed with ATCO lead wires. Improper soldering operation (too high soldering temp. , too long soldering time, too short lead wire etc.) may transfer more heat to the thermal element and ATCO may open in advance.
3. When soldering conditions are more severe than those listed in Table T-1, a heat sink fixture should be used between soldering point and ATCO body.
4. When soldering, please do not pull / push or twist ATCO body or lead wires.
5. After soldering, let it naturally cool for longer than 20 seconds. During cooling, never move the ATCO body or lead wires.

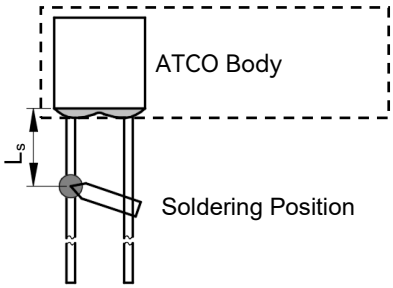

FIGURE T-1

TABLE T-1 Hand-Soldering Time

Rated Functioning Temp. (T_f)	Max. Allowable Soldering Time for Different Lead Wire Length (Fig.T-1)									Max. Soldering Temp.
	L_s Length	Time		L_s Length	Time		L_s Length	Time		
		Tinned Copper Wire	CP Wire		Tinned Copper Wire	CP Wire		Tinned Copper Wire	CP Wire	
(°C)	(mm)	(s)	(s)	(mm)	(s)	(s)	(mm)	(s)	(s)	(°C)
102 to 115	10	1[a]	4	20	2	5	30	3	6	400
116 to 135	10	1[a]	4	20	3	6	30	5	8	
136 to 150	10	3	6	20	5	8	30	5	8	

Note:
a: Auxiliary Heat Sink Fixture is Required to Avoid ATCO Cutting off Unexpectedly.

All Rights Reserved by Xiamen SET Electronics Co., Ltd. 2024-2026 V1.1

Wave Soldering

The wave soldering parameters as Table T-2, for reference only, when ATCO is for practice use, you need to do some validation experiments. For example, using X-RAY to see the fusible alloy of ATCO whether damage after wave soldering.

TABLE T-2 Wave Soldering Parameters Setting

Rated Functioning Temp. (T_f)	Max. Allowable Preheating Temp. When the Length of Lead Wire is Different (Fig.T-1)				Preheating Time (t_1)	Max. Wave Soldering Temp.	Dwelling Time (t_2)	Cooling Time (t_3)
	L_s Length	Preheating Temp.	L_s Length	Preheating Temp.				
(°C)	(mm)	(°C)	(mm)	(°C)	(s)	(°C)	(s)	(s)
102 to 130	Recommend Hand-Soldering							
131 to 150	20	80	30	90	< 60	≤ 260	≤ 3	≤ 10

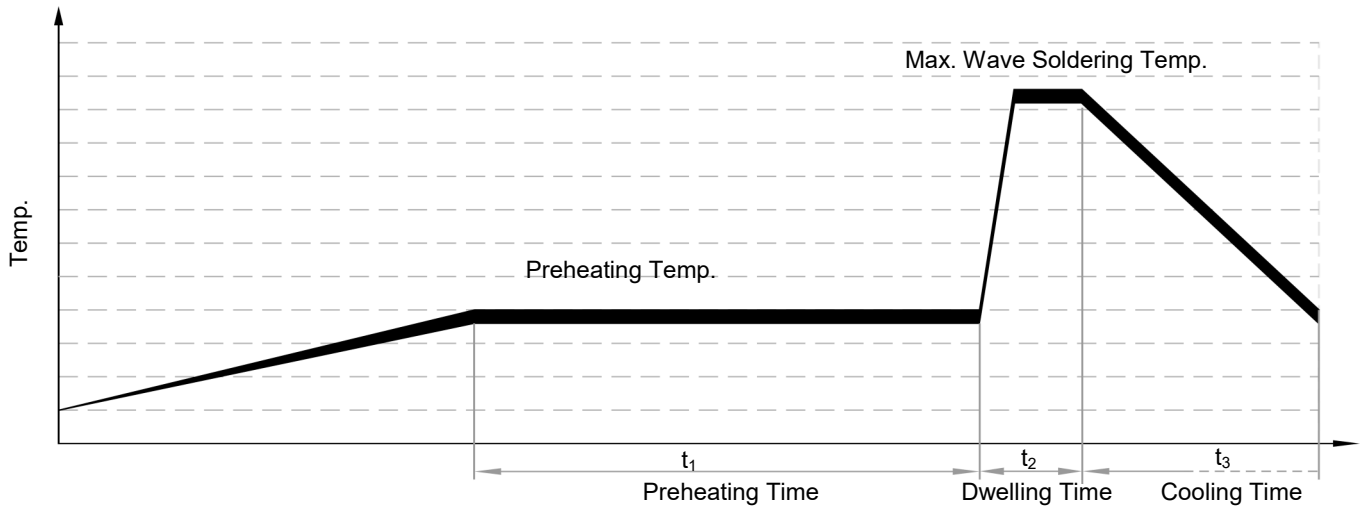

All Rights Reserved by Xiamen SET Electronics Co., Ltd. 2024-2026 V1.1

Product Temp.-Time Curve (Reference)

The Temp.-Time Curve of Thermal-Link in different temp. oil bath.

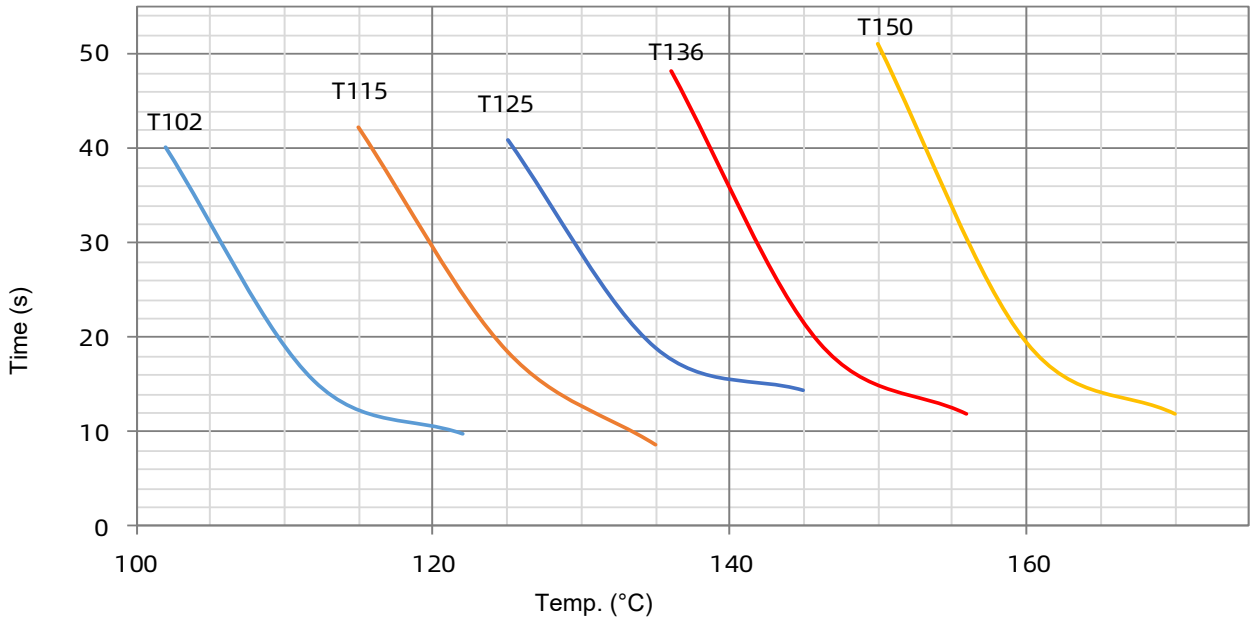

Product Current-Time Curve (Reference)

The Current-Time Curve shows functioning time at multi-times rated current at room temperature 25 ± 2 °C.

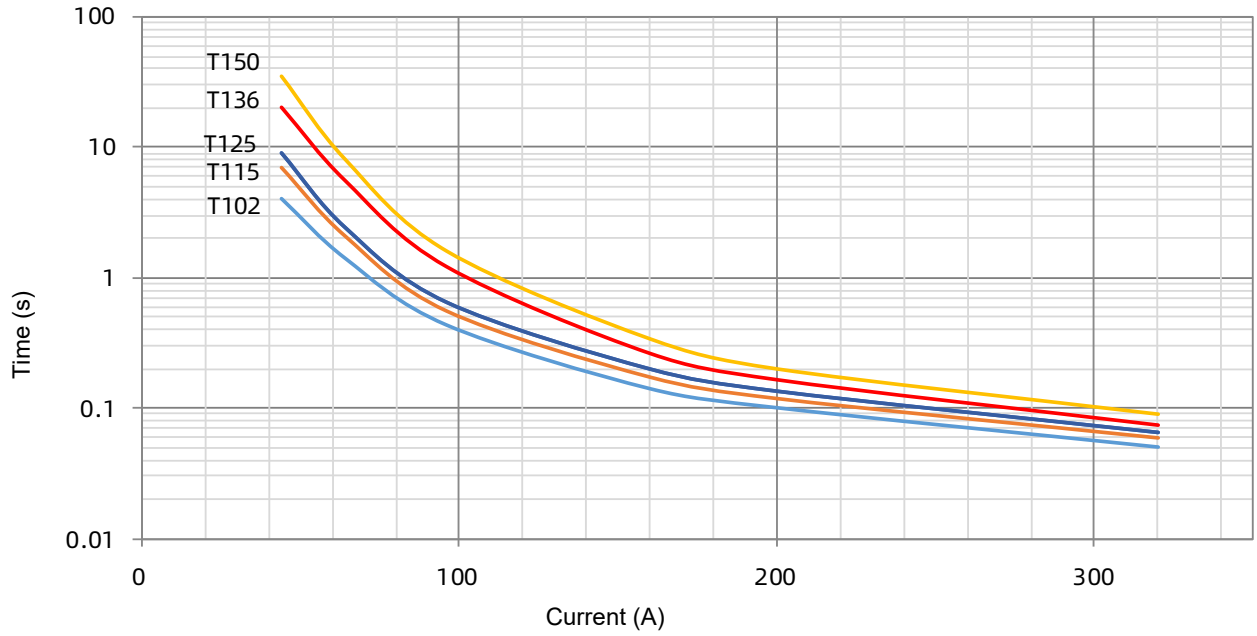

All Rights Reserved by Xiamen SET Electronics Co., Ltd. 2024-2026 V1.1

Packaging Information

Bulk

Item	Box	Carton
Dimensions (mm)	170 × 117 × 50	490 × 365 × 220
Quantity (PCS)	600	19200
Gross Weight (kg)		17.3 ± 10%

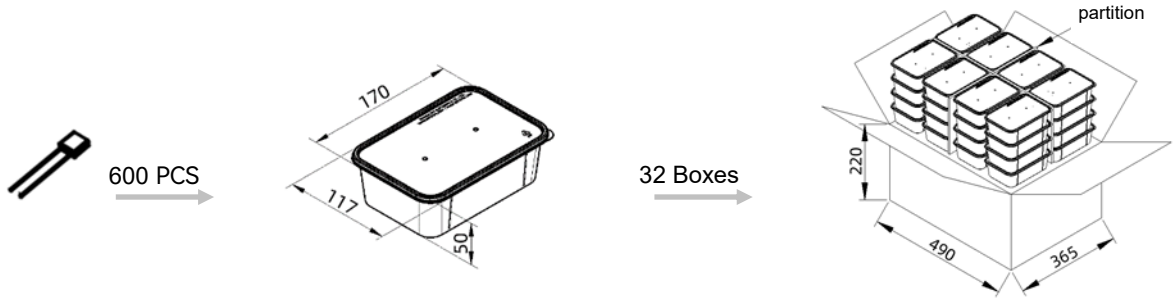

Taping

Item	Box	Carton
Dimensions (mm)	328 × 200 × 70	480 × 340 × 220
Quantity (PCS)	2000	12000
Gross Weight (kg)		12.0 ± 10%

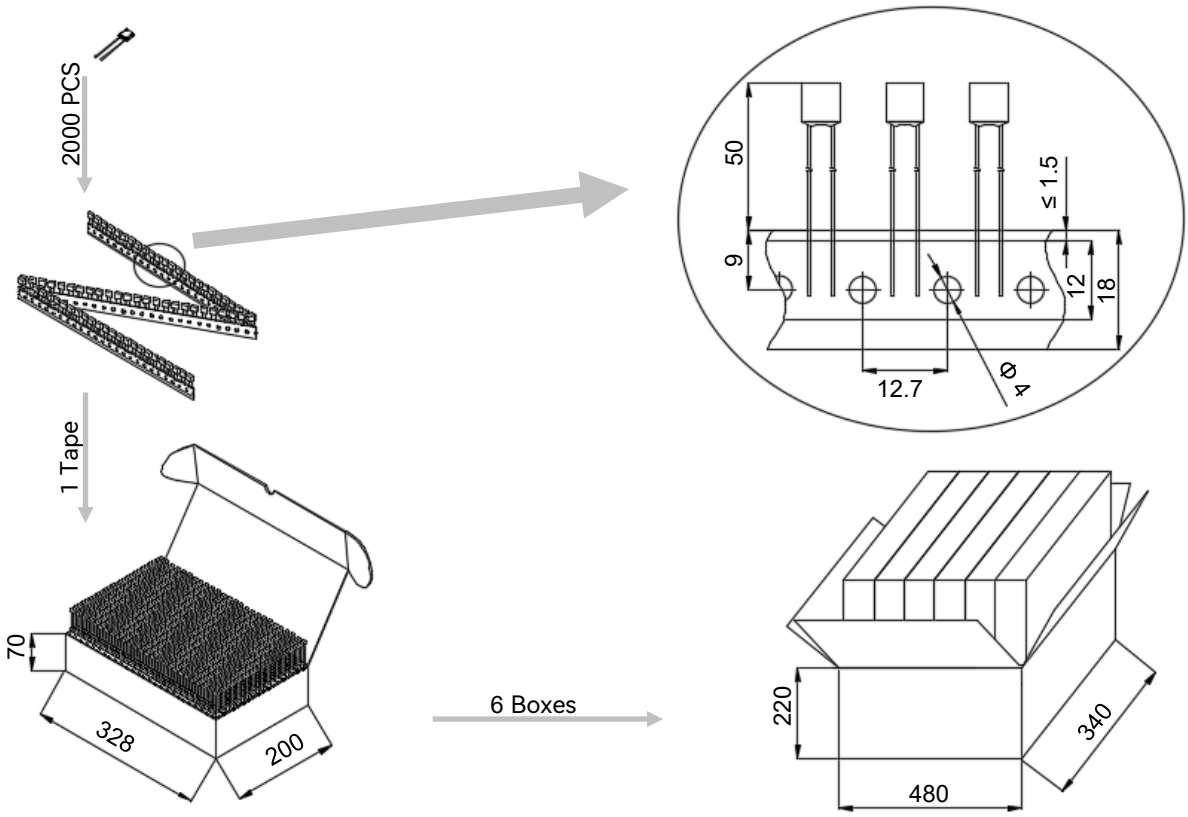

All Rights Reserved by Xiamen SET Electronics Co., Ltd. 2024-2026 V1.1

Part Numbering System

ATCO – T 115 - A N N A B - 001

Other Options

Packing

B	Bulk
T	Taping

Leads Forming

A	Straight Lead
B	Single Lead Bending
C	Leads Bending
D	Leads Kinking
E	Leads Bending and Kinking

Color of Insulation Tube

W	White
Y	Yellow
R	Red
K	Black
N	None

Insulation Tube Material

T	Teflon
P	Polyester
N	None

Lead Wire Type

A	Tinned Copper Wire
B	Tinned Copper Plated Wire

Rated Functioning Temp.

115	115 °C, See Specifications

Series

T	Series See Specifications

Product Category

ATCO	Alloy Thermal-Link

All Rights Reserved by Xiamen SET Electronics Co., Ltd. 2024-2026 V1.1

Thermal-Link (ATCO)-Alloy Type

SM Series

Description

Thermal-Link (ATCO)-Alloy Type is defined as a non-resettable protective device functioning one time only. It is widely used in electrical equipment. ATCO is mainly consist of fusible alloy, flux resin, case, sealant and lead wires. Normally, fusible alloy is jointed to the two lead wires. Under abnormal conditions, when the temp. reaches to the fusing temp. of ATCO, the fusible alloy melts and quickly retracts to the two lead wire ends with the aid of the flux resin and disconnects the circuit completely.

SETsafe | SETfuse Thermal-Link (ATCO)-Alloy Type SM series Rated Functioning Temp. from 102 ℃ to 150 ℃, Rated Current: 10 A, safety certification

Includes UL, cUL, TUV, PSE, and complies with RoHS and REACH.

Features

- Non-Resettable
- High Accuracy of Functioning Temp.
- High Surge Capacity
- RoHS & REACH Compliant

Applications

- Surge Protective Devices
- Power Strips
- Lamps
- Switched-Mode Power Supplies
- Home Electrical Appliances
- Batteries

Customization

- Other Temp.
- The Length of Lead Wires
- Taping Packing Available
- Lead Wires can be Insulated
- Leads Forming Types

Structure Diagrams

Radial

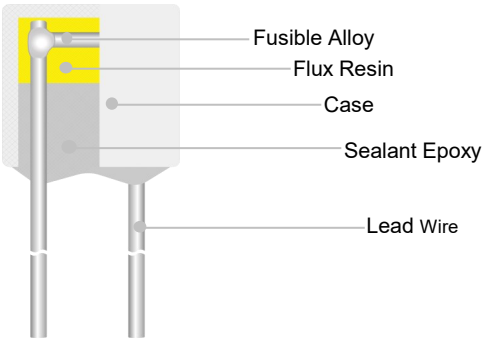

Marking

Radial (Color for reference only)

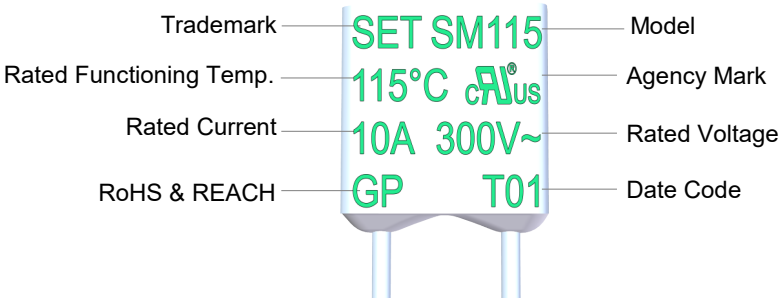

Remark: The Date Code means Year and quarter: A stands for 2000, B stands for 2001 and 01 stands for the first quarter, 02 stands for the second quarter, and so on.

Dimensions (mm)

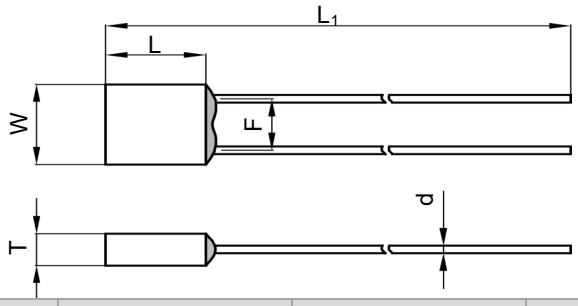

L	L_1	W	T	d	F
7.5 ± 0.5	35.0 ± 2.0	8.3 ± 0.5	3.4 ± 0.2	1.05 ± 0.05	5.2 ± 0.5

All Rights Reserved by Xiamen SET Electronics Co., Ltd. 2024-2026 V1.1

Specifications

Rated Functioning Temp. (T_f) °C

	Model	Fusing Temp.	T_h	T_m	I_r	U_r	I_n 8 / 20 μs (15 Times)	I_{max} 8 / 20 μs (1 Time)	UL	cUL	TUV	PSE	RoHS REACH
		(°C)	(°C)	(°C)	(A)	(V)	(kA)	(kA)					
150	SM150	145 ± 2	118	200	10	AC 300	5	10	●	●	●	●	●
136	SM136	131 ± 2	106	200	10	AC 300	5	10	●	●	●	●	●
115	SM115	111 ± 2	85	200	10	AC 300	5	10	●	●	●	●	●
102	SM102	98 ± 3	72	200	10	AC 300	5	10	●	●	●	●	●

Note:

1: "●"Means certificated, "○"Means non-certificated.
2: RoHS & REACH Compliant .

All Rights Reserved by Xiamen SET Electronics Co., Ltd. 2024-2026 V1.1

Agency Information

Agency Symbol	Standards	The File No. and certification No. obtained by SETsafe | SETfuse
	UL 60691	E214712
	CAN-CSA-E60691	E214712
	EN 60691	R50388886
	J60691	JET2121-32001-2029、JET2121-32001-2030 JET2121-32001-2031

Soldering

Hand-Soldering

1. Soldering should be carried out according to Table SM-1.
2. The thermal element of ATCO is fusible alloy with low melting point, which is jointed with ATCO lead wires. Improper soldering operation (too high soldering temp. , too long soldering time, too short lead wire etc.) may transfer more heat to the thermal element and ATCO may open in advance.
3. When soldering conditions are more severe than those listed in Table SM-1, a heat sink fixture should be used between soldering point and ATCO body.
4. When soldering, please do not pull / push or twist ATCO body or lead wires.
5. After soldering, let it naturally cool for longer than 20 seconds. During cooling, never move the ATCO body or lead wires.

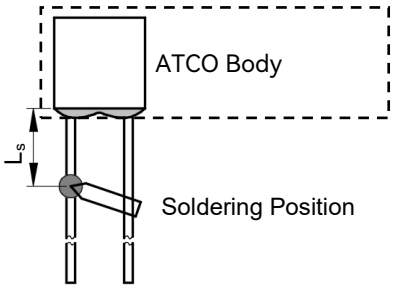

FIGURE SM-1

TABLE SM-1 Hand-Soldering Time

Rated Functioning Temp. (T_f)	Max. Allowable Soldering Time for Different Lead Wire Length (Fig.SM-1)									Max. Soldering Temp.
	L_s Length	Time		L_s Length	Time		L_s Length	Time		
		Tinned Copper Wire	CP Wire		Tinned Copper Wire	CP Wire		Tinned Copper Wire	CP Wire	
(°C)	(mm)	(s)	(s)	(mm)	(s)	(s)	(mm)	(s)	(s)	(°C)
102 to 115	10	1[a]	4	20	2	5	30	3	6	400
116 to 135	10	1[a]	4	20	3	6	30	5	8	
136 to 150	10	3	6	20	5	8	30	5	8	

Note:
a: Auxiliary Heat Sink Fixture is Required to Avoid ATCO Cutting off Unexpectedly.

All Rights Reserved by Xiamen SET Electronics Co., Ltd. 2024-2026 V1.1

Wave Soldering

The wave soldering parameters as Table SM-2, for reference only, when ATCO is for practice use, you need to do some validation experiments. For example, using X-RAY to see the fusible alloy of ATCO whether damage after wave soldering.

TABLE SM-2 Wave Soldering Parameters Setting

Rated Functioning Temp. (T_f)	Max. Allowable Preheating Temp. When the Length of Lead Wire is Different (Fig.SM-1)				Preheating Time (t_1)	Max. Wave Soldering Temp.	Dwelling Time (t_2)	Cooling Time (t_3)
	L_s Length	Preheating Temp.	L_s Length	Preheating Temp.				
(°C)	(mm)	(°C)	(mm)	(°C)	(s)	(°C)	(s)	(s)
102 to 130	Recommend Hand-Soldering							
131 to 150	20	80	30	90	< 60	≤ 260	≤ 3	≤ 10

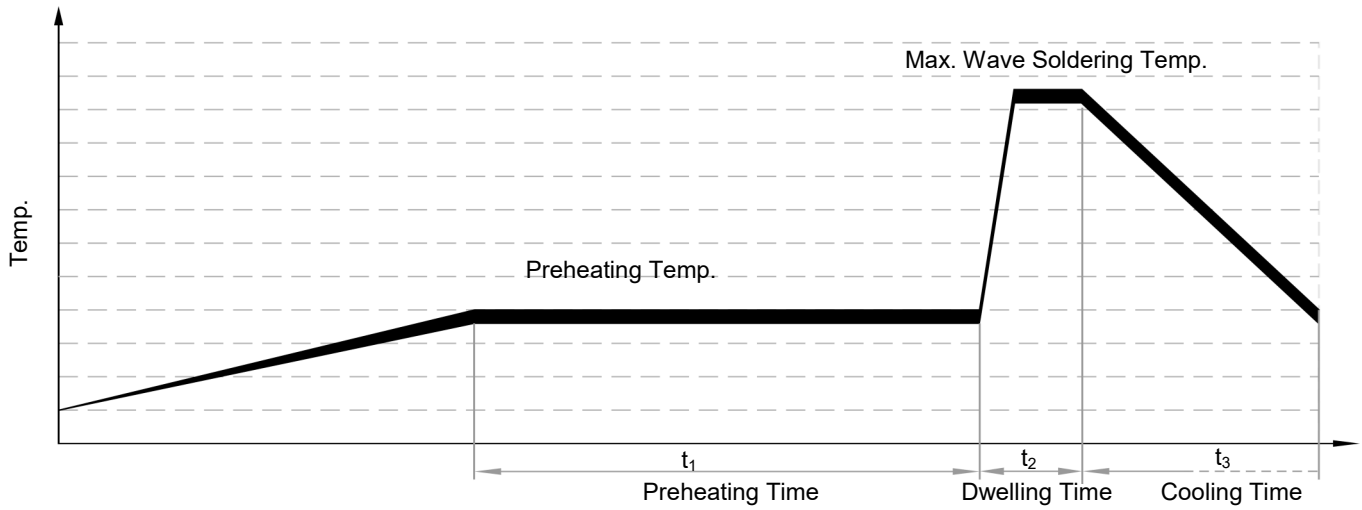

All Rights Reserved by Xiamen SET Electronics Co., Ltd. 2024-2026 V1.1

Product Temp.-Time Curve (Reference)

The Temp.-Time Curve of Thermal-Link in different temp. oil bath.

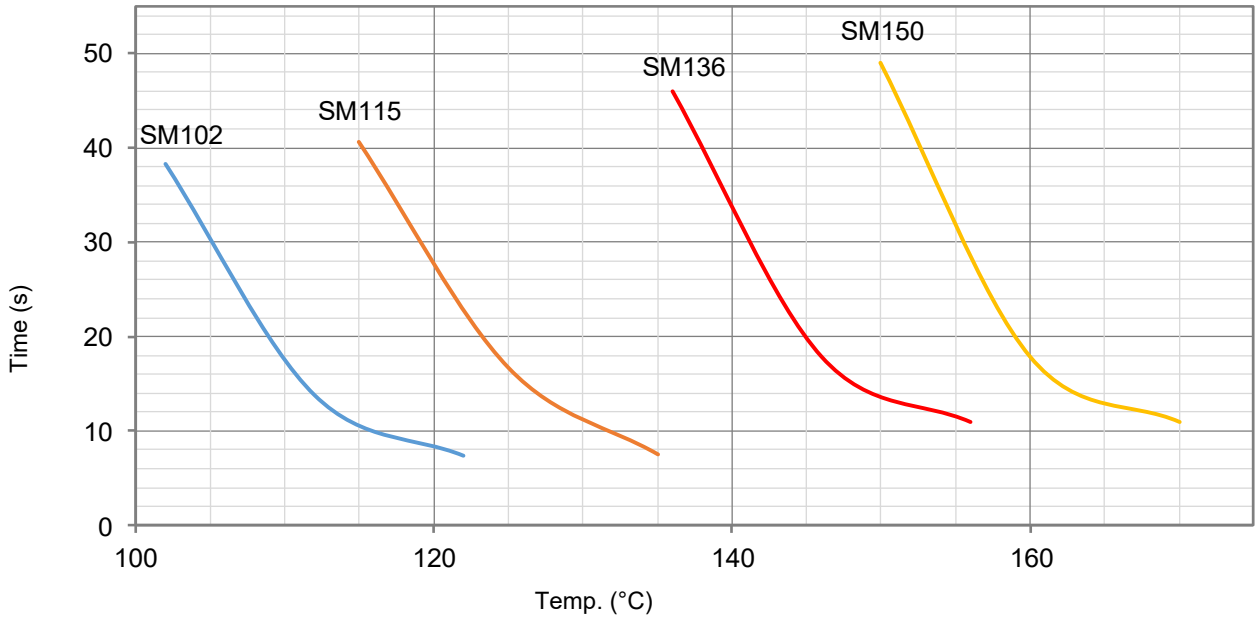

Product Current-Time Curve (Reference)

The Current-Time Curve shows functioning time at multi-times rated current at room temperature 25 ± 2 °C.

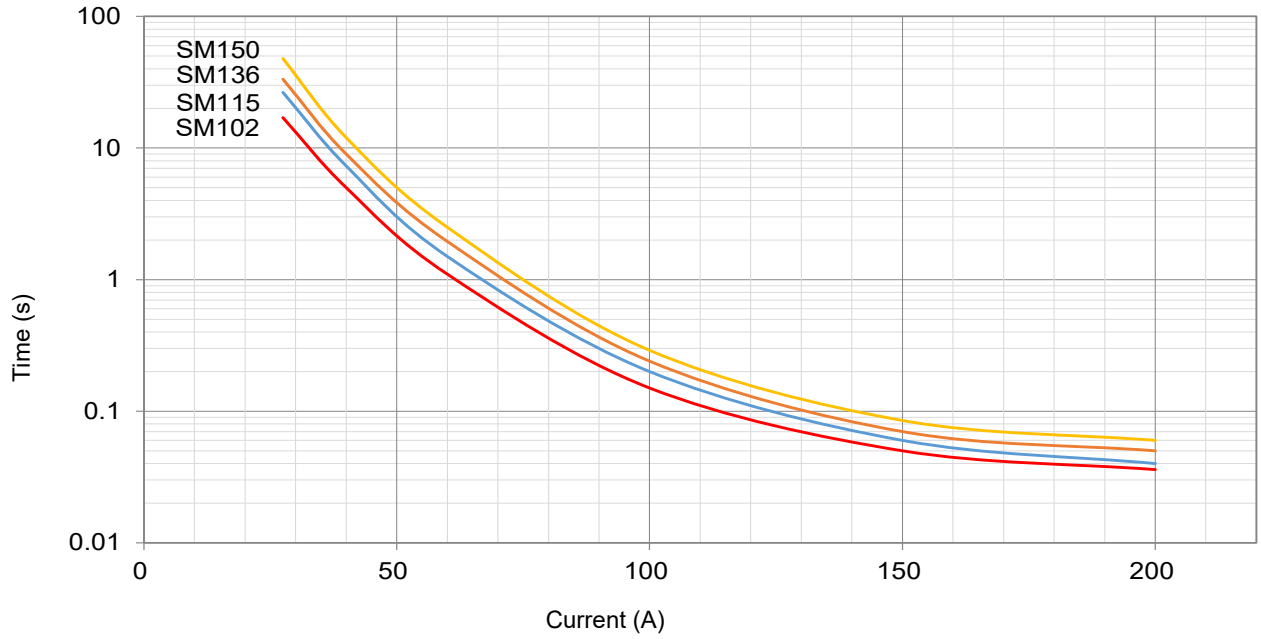

All Rights Reserved by Xiamen SET Electronics Co., Ltd. 2024-2026 V1.1

Packaging Information

Bulk

Item	Box	Carton
Dimensions (mm)	170 × 117 × 50	490 × 365 × 220
Quantity (PCS)	600	19200
Gross Weight (kg)		17.3 ± 10%

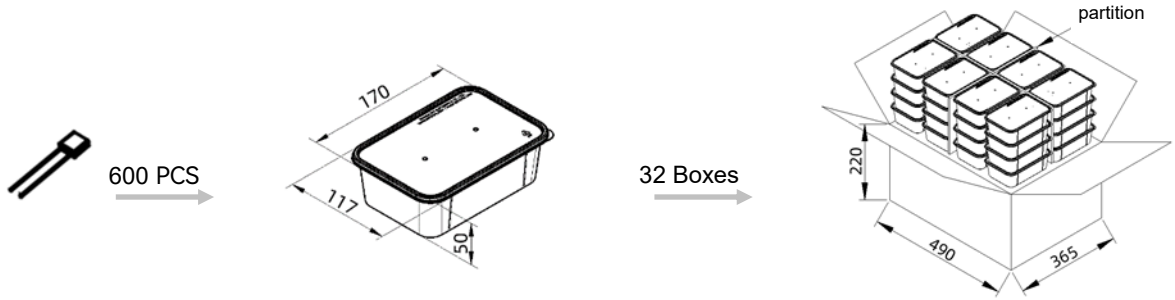

Taping

Item	Box	Carton
Dimensions (mm)	328 × 200 × 70	480 × 340 × 220
Quantity (PCS)	2000	12000
Gross Weight (kg)		12.0 ± 10%

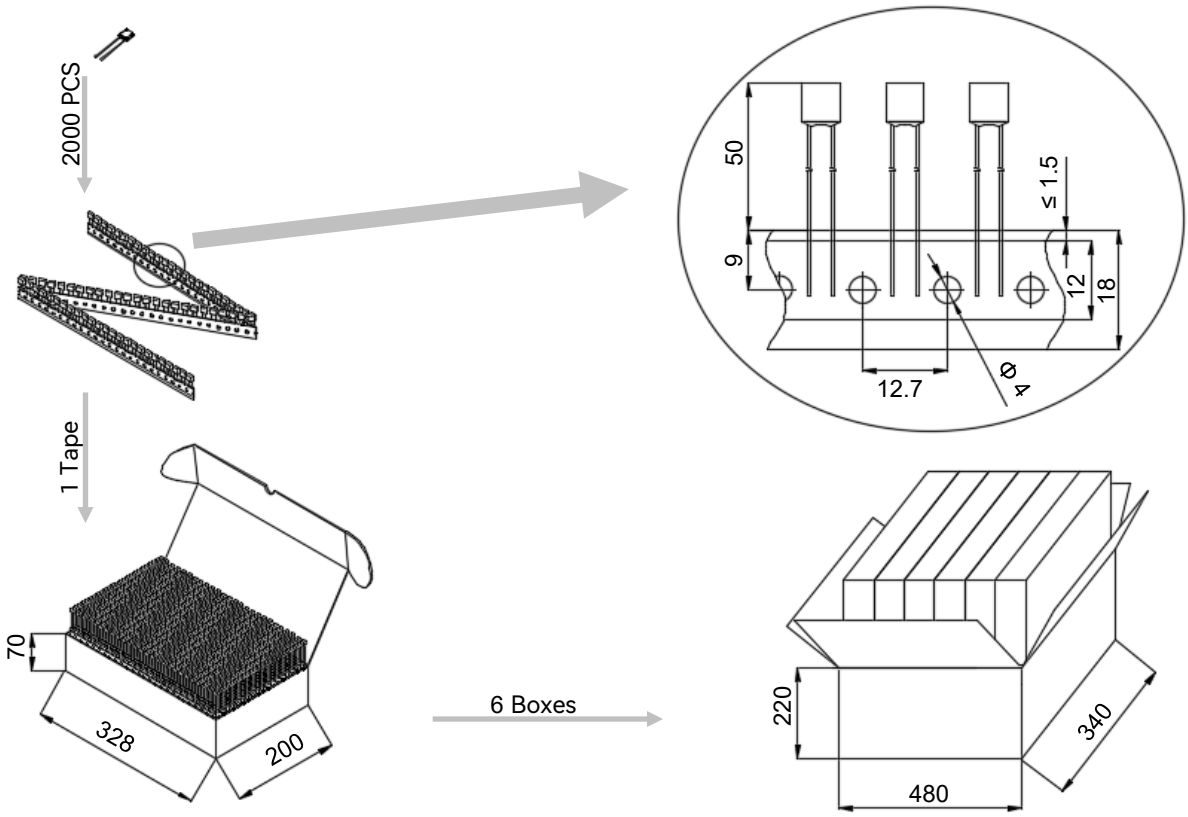

All Rights Reserved by Xiamen SET Electronics Co., Ltd. 2024-2026 V1.1

Part Numbering System

ATCO –SM 115 - A N N A B - 001

Other Options

Packing

B	Bulk
T	Taping

Leads Forming

A	Straight Lead
B	Single Lead Bending
C	Leads Bending
D	Leads Kinking
E	Leads Bending and Kinking

Color of Insulation Tube

W	White
Y	Yellow
R	Red
K	Black
N	None

Insulation Tube Material

T	Teflon
P	Polyester
N	None

Lead Wire Type

A	Tinned Copper Wire
B	Tinned Copper Plated Wire

Rated Functioning Temp.

115	115 °C, See Specifications

Series

SM	Series See Specifications

Product Category

ATCO	Alloy Thermal-Link

All Rights Reserved by Xiamen SET Electronics Co., Ltd. 2024-2026 V1.1

Thermal-Link (ATCO)-Alloy Type

TM Series

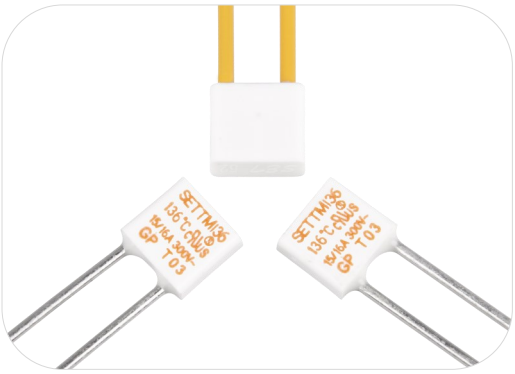

Description

Thermal-Link (ATCO)-Alloy Type is defined as a non-resettable protective device functioning one time only. It is widely used in electrical equipment. ATCO is mainly consist of fusible alloy, flux resin, case, sealant and lead wires. Normally, fusible alloy is jointed to the two lead wires. Under abnormal conditions, when the temp. reaches to the fusing temp. of ATCO, the fusible alloy melts and quickly retracts to the two lead wire ends with the aid of the flux resin and disconnects the circuit completely.

SETsafe | SETfuse Thermal-Link (ATCO)-Alloy Type TM series Rated Functioning Temp. from 102 ℃ to 150 ℃, Rated Current: 15 A,16A, safety certification Includes UL, cUL, TUV, PSE, and complies with RoHS and REACH.

Features

- Non-Resettable
- High Accuracy of Functioning Temp.
- High Surge Capacity
- RoHS & REACH Compliant

Applications

- Surge Protective Devices
- Power Strips
- Lamps
- Switched-Mode Power Supplies
- Home Electrical Appliances
- Batteries

Customization

- Other Temp.
- The Length of Lead Wires
- Taping Packing Available
- Lead Wires can be Insulated
- Leads Forming Types

Structure Diagrams

Radial

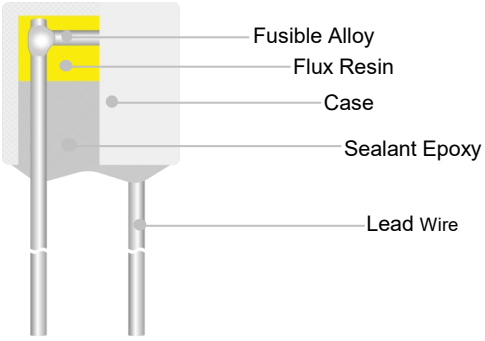

Marking

Radial (Color for reference only)

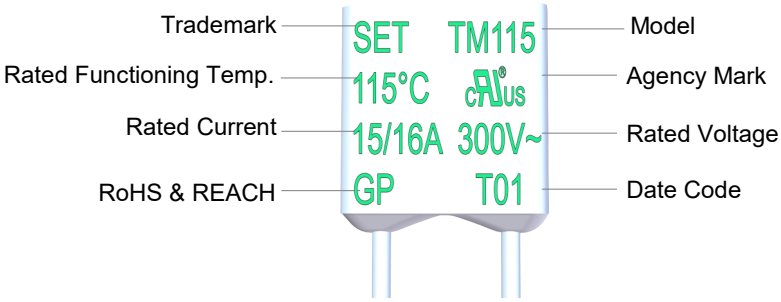

Remark: The Date Code means Year and quarter: A stands for 2000, B stands for 2001 and 01 stands for the first quarter, 02 stands for the second quarter, and so on.

Dimensions (mm)

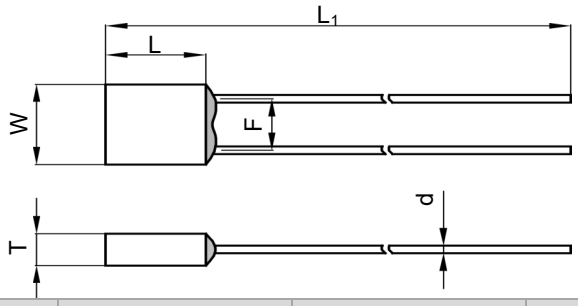

L	L_1	W	T	d	F
7.5 ± 0.5	35.0 ± 2.0	8.3 ± 0.5	3.4 ± 0.2	1.05 ± 0.05	5.2 ± 0.5

All Rights Reserved by Xiamen SET Electronics Co., Ltd. 2024-2026 V1.1

Specifications

Rated Functioning Temp. (T_f) °C

	Model	Fusing Temp.	T_h	T_m	I_r	U_r	I_n 8 / 20 μs (15 Times)	I_{max} 8 / 20 μs (1 Time)	UL	cUL	TUV	PSE	RoHS REACH
		(°C)	(°C)	(°C)	(A)	(V)	(kA)	(kA)					
150	TM150	145 ± 2	118	200	15 / 16	AC 300	6	12	●	●	●	●	●
136	TM136	131 ± 2	106	200	15 / 16	AC 300	6	12	●	●	●	●	●
115	TM115	111 ± 2	85	200	15 / 16	AC 300	6	12	●	●	●	●	●
102	TM102	98 ± 3	72	200	15 / 16	AC 300	6	12	●	●	●	●	●

Note:

1: "●"Means certificated, "○"Means non-certificated.

2: RoHS & REACH Compliant .

All Rights Reserved by Xiamen SET Electronics Co., Ltd. 2024-2026 V1.1

Agency Information

Agency Symbol	Standards	The File No. and certification No. obtained by SETsafe | SETfuse
	UL 60691	E214712
	CAN-CSA-E60691	E214712
	EN 60691	R50388886
	J60691	JET2121-32001-2029、JET2121-32001-2030 JET2121-32001-2031、JET2121-32001-2032 JET2121-32001-2033、JET2121-32001-2034

Soldering

Hand-Soldering

1. Soldering should be carried out according to Table TM-1.
2. The thermal element of ATCO is fusible alloy with low melting point, which is jointed with ATCO lead wires. Improper soldering operation (too high soldering temp. , too long soldering time, too short lead wire etc.) may transfer more heat to the thermal element and ATCO may open in advance.
3. When soldering conditions are more severe than those listed in Table TM-1, a heat sink fixture should be used between soldering point and ATCO body.
4. When soldering, please do not pull / push or twist ATCO body or lead wires.
5. After soldering, let it naturally cool for longer than 20 seconds. During cooling, never move the ATCO body or lead wires.

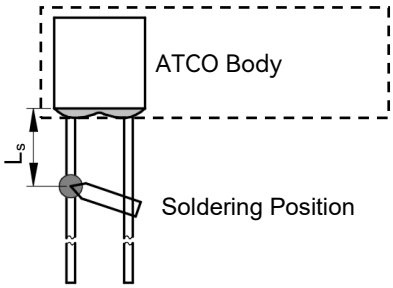

FIGURE TM-1

TABLE TM-1 Hand-Soldering Time

Rated Functioning Temp. (T_f)	Max. Allowable Soldering Time for Different Lead Wire Length (Fig.TM-1)									Max. Soldering Temp.
	L_s Length	Time		L_s Length	Time		L_s Length	Time		
		Tinned Copper Wire	CP Wire		Tinned Copper Wire	CP Wire		Tinned Copper Wire	CP Wire	
(°C)	(mm)	(s)	(s)	(mm)	(s)	(s)	(mm)	(s)	(s)	(°C)
102 to 115	10	1[a]	4	20	2	5	30	3	6	400
116 to 135	10	1[a]	4	20	3	6	30	5	8	
136 to 150	10	3	6	20	5	8	30	5	8	

Note:
a: Auxiliary Heat Sink Fixture is Required to Avoid ATCO Cutting off Unexpectedly.

All Rights Reserved by Xiamen SET Electronics Co., Ltd. 2024-2026 V1.1

Wave Soldering

The wave soldering parameters as Table TM-2, for reference only, when ATCO is for practice use, you need to do some validation experiments. For example, using X-RAY to see the fusible alloy of ATCO whether damage after wave soldering.

TABLE TM-2 Wave Soldering Parameters Setting

Rated Functioning Temp. (T_f)	Max. Allowable Preheating Temp. When the Length of Lead Wire is Different (Fig.TM-1)				Preheating Time (t_1)	Max. Wave Soldering Temp.	Dwelling Time (t_2)	Cooling Time (t_3)
	L_s Length	Preheating Temp.	L_s Length	Preheating Temp.				
(°C)	(mm)	(°C)	(mm)	(°C)	(s)	(°C)	(s)	(s)
102 to 130	Recommend Hand-Soldering							
131 to 150	20	80	30	90	< 60	≤ 260	≤ 3	≤ 10

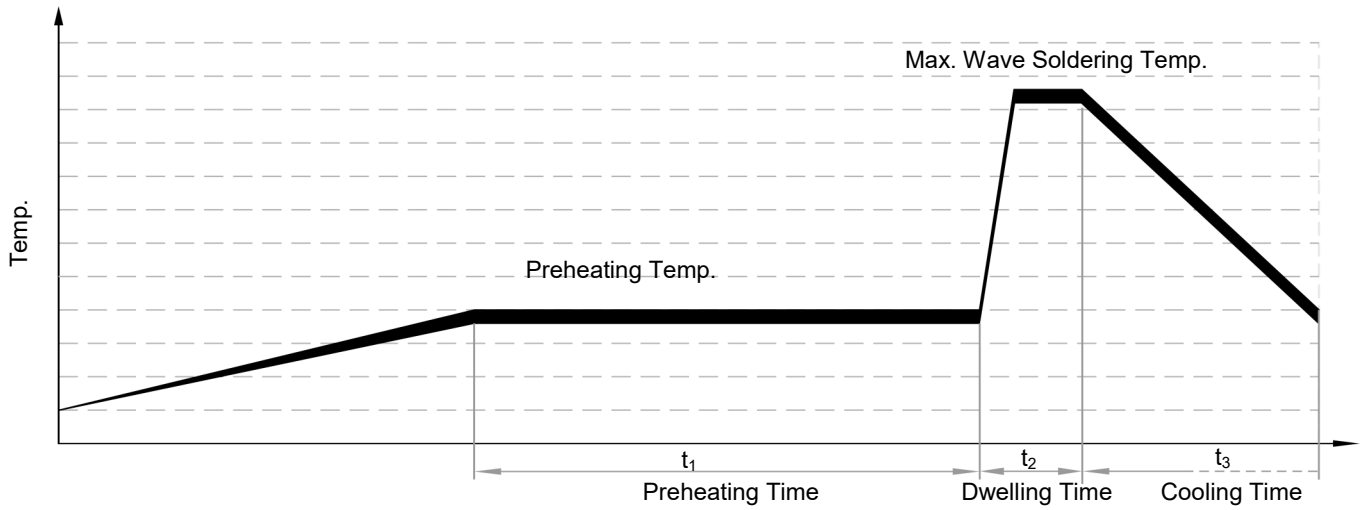

All Rights Reserved by Xiamen SET Electronics Co., Ltd. 2024-2026 V1.1

Product Temp.-Time Curve (Reference)

The Temp.-Time Curve of Thermal-Link in different temp. oil bath.

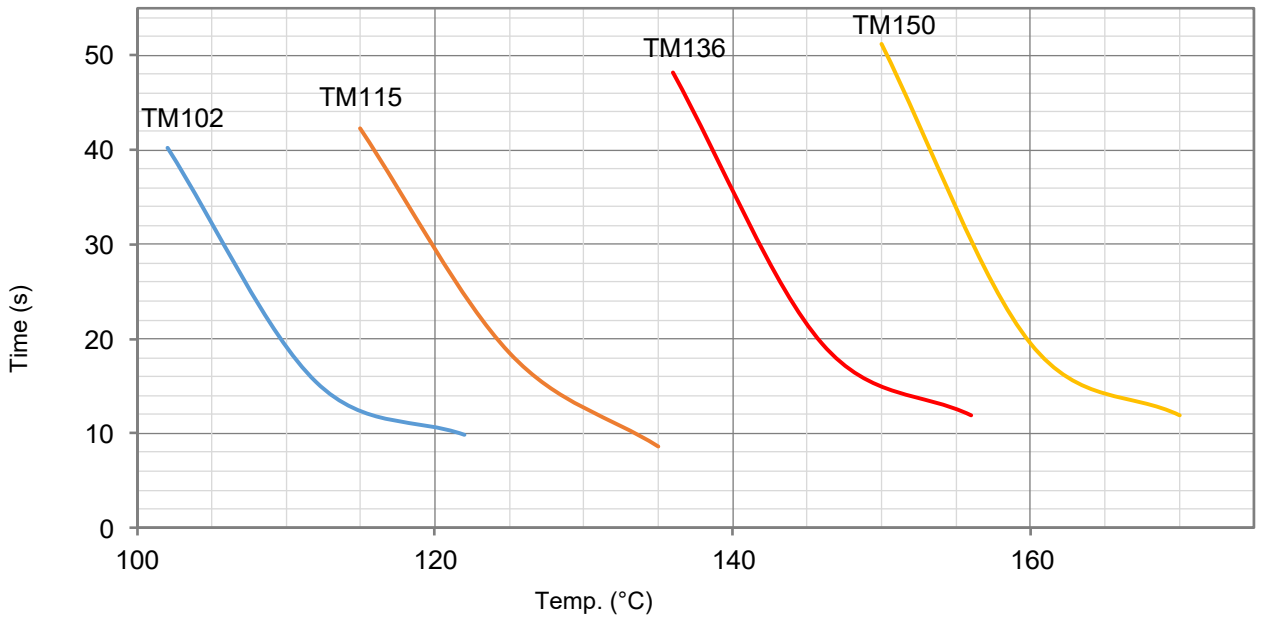

Product Current-Time Curve (Reference)

The Current-Time Curve shows functioning time at multi-times rated current at room temperature 25 ± 2 °C.

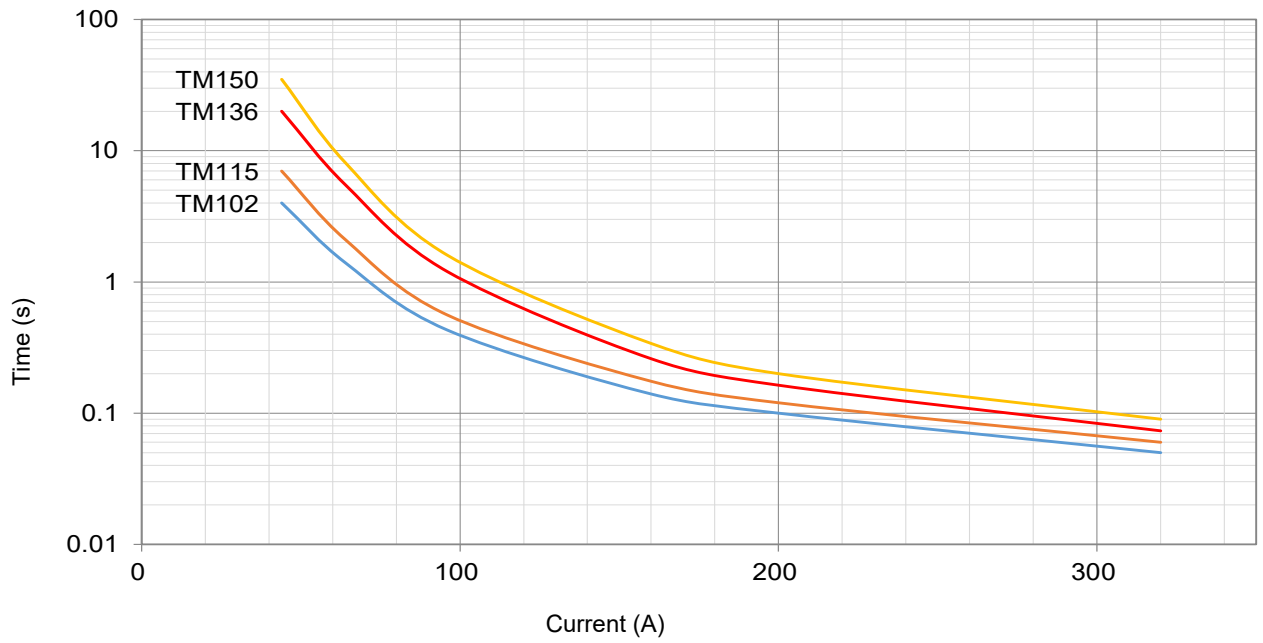

All Rights Reserved by Xiamen SET Electronics Co., Ltd. 2024-2026 V1.1

Packaging Information

Bulk

Item	Box	Carton
Dimensions (mm)	170 × 117 × 50	490 × 365 × 220
Quantity (PCS)	600	19200
Gross Weight (kg)		17.3 ± 10%

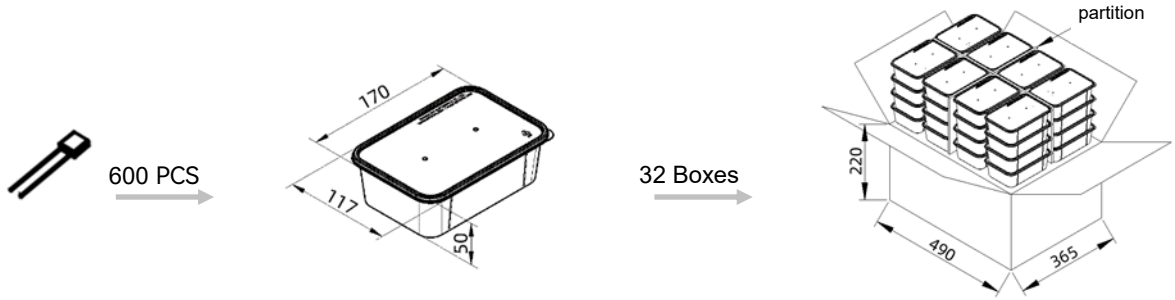

Taping

Item	Box	Carton
Dimensions (mm)	328 × 200 × 70	480 × 340 × 220
Quantity (PCS)	2000	12000
Gross Weight (kg)		12.0 ± 10%

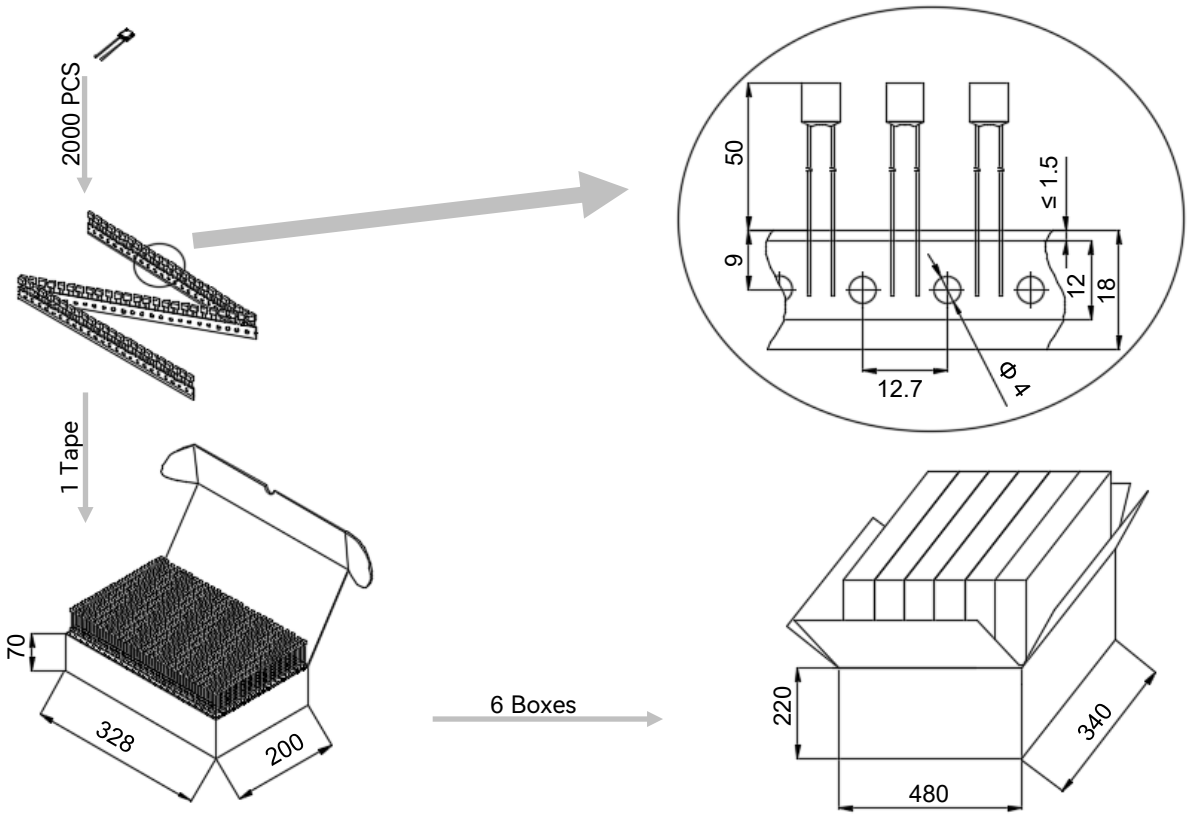

All Rights Reserved by Xiamen SET Electronics Co., Ltd. 2024-2026 V1.1

Part Numbering System

ATCO –TM 115 - A N N A B - 001

Other Options

Packing

B	Bulk
T	Taping

Leads Forming

A	Straight Lead
B	Single Lead Bending
C	Leads Bending
D	Leads Kinking
E	Leads Bending and Kinking

Color of Insulation Tube

W	White
Y	Yellow
R	Red
K	Black
N	None

Insulation Tube Material

T	Teflon
P	Polyester
N	None

Lead Wire Type

A	Tinned Copper Wire
B	Tinned Copper Plated Wire

Rated Functioning Temp.

115	115 °C, See Specifications

Series

TM	Series See Specifications

Product Category

ATCO	Alloy Thermal-Link

All Rights Reserved by Xiamen SET Electronics Co., Ltd. 2024-2026 V1.1

Thermal-Link (ATCO)-Alloy Type

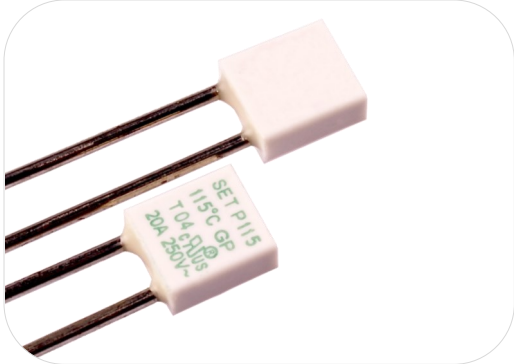

Description

Thermal-Link (ATCO)-Alloy Type is defined as a non-resettable protective device functioning one time only. It is widely used in electrical equipment. ATCO is mainly consist of fusible alloy, flux resin, case, sealant and lead wires. Normally, fusible alloy is jointed to the two lead wires. Under abnormal conditions, when the temp. reaches to the fusing temp. of ATCO, the fusible alloy melts and quickly retracts to the two lead wire ends with the aid of the flux resin and disconnects the circuit completely.

SETsafe | SETfuse Thermal-Link (ATCO)-Alloy Type P series Rated Functioning Temp. from 102 ℃ to 136 ℃, Rated Current: 20 A, safety certification Includes UL, cUL, TUV, CCC, PSE, and complies with RoHS and REACH.

Features

- Non-Resettable
- High Accuracy of Functioning Temp.
- High Surge Capacity
- RoHS & REACH Compliant

Applications

- Surge Protective Devices
- Power Strips
- Lamps
- Switched-Mode Power Supplies
- Home Electrical Appliances
- Batteries

Customization

- Other Temp.
- The Length of Lead Wires
- Leads Forming Types

Structure Diagrams

Radial

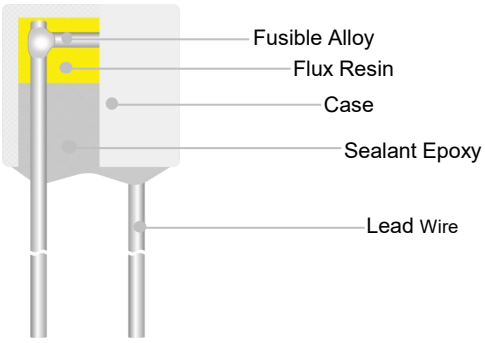

Marking

Radial (Color for reference only)

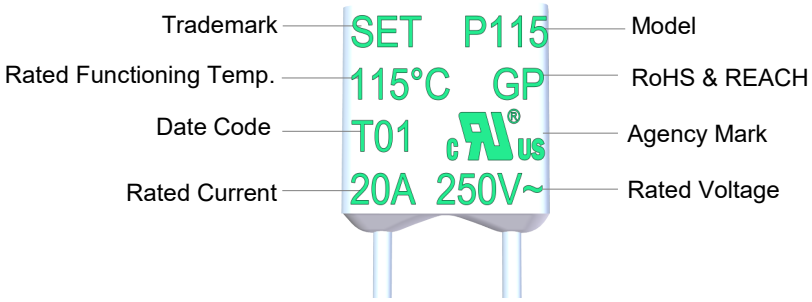

Remark: The Date Code means Year and quarter: A stands for 2000, B stands for 2001 and 01 stands for the first quarter, 02 stands for the second quarter, and so on.

Dimensions (mm)

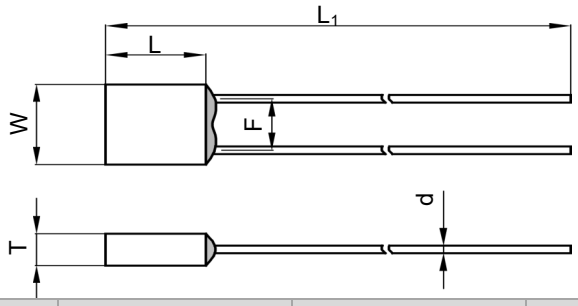

L	L_1	W	T	d	F
11.5 ± 0.5	50.0 ± 2.0	10.8 ± 0.5	4.8 ± 0.2	1.60 ± 0.05	6.6 ± 0.8

All Rights Reserved by Xiamen SET Electronics Co., Ltd. 2024-2026 V1.1

Specifications

Rated Functioning Temp. (T_f) °C	Model	Fusing Temp. (°C)	T_h (°C)	T_m (°C)	I_r (A)	U_r (V)	I_n 8 / 20 μs (15 Times) (kA)	I_{max} 8 / 20 μs (1 Time) (kA)	UL	cUL	TUV	PSE	CCC	RoHS REACH
136	P136	131 ± 2	102 92[a]	200	20	AC 250	12	25	●	●	○	●	○	●
						AC 300			●	●	○	●	○	●
						AC 400			○	○	●	●	●	●
						DC 120			○	○	●	○	●	●
125	P125	121 ± 2	90 80[a]	200	20	AC 250	12	25	○	○	○	●	○	●
						AC 400			○	○	●	●	●	●
						DC 120			○	○	●	○	●	●
115	P115	111 ± 2	82 72[a]	200	20	AC 250	12	25	●	●	○	●	○	●
						AC 300			●	●	○	●	○	●
						AC 400			○	○	●	●	●	●
						DC 120			○	○	●	○	●	●
102	P102	98 ± 3	66 50[a]	200	20	AC 250	10	20	○	○	○	●	○	●
						AC 400			○	○	●	●	●	●
						DC 120			○	○	●	○	●	●

Note:

1: "●"Means certificated, "○"Means non-certificated.

2: RoHS & REACH Compliant .

All Rights Reserved by Xiamen SET Electronics Co., Ltd. 2024-2026 V1.1

Agency Information

Agency Symbol	Standards	The File No. and certification No. obtained by SETsafe | SETfuse
	UL 60691	E214712
	CAN-CSA-E60691	E214712
	EN 60691	R50259029
	J60691	JET2121-32001-2032、JET2121-32001-2033
	GB 9816.1	2020980205000180

Soldering

Hand-Soldering

1. Soldering should be carried out according to Table P-1.
2. The thermal element of ATCO is fusible alloy with low melting point, which is jointed with ATCO lead wires. Improper soldering operation (too high soldering temp. , too long soldering time, too short lead wire etc.) may transfer more heat to the thermal element and ATCO may open in advance.
3. When soldering conditions are more severe than those listed in Table P-1, a heat sink fixture should be used between soldering point and ATCO body.
4. When soldering, please do not pull / push or twist ATCO body or lead wires.
5. After soldering, let it naturally cool for longer than 20 seconds. During cooling, never move the ATCO body or lead wires.

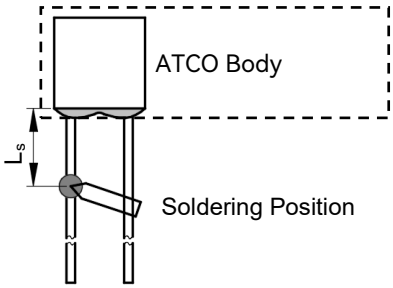

FIGURE P-1

TABLE P-1 Hand-Soldering Time

Rated Functioning Temp. (T_f)	Max. Allowable Soldering Time for Different Lead Wire Length (Fig.P-1)									Max. Soldering Temp.
	L_s Length	Time		L_s Length	Time		L_s Length	Time		
		Tinned Copper Wire	CP Wire		Tinned Copper Wire	CP Wire		Tinned Copper Wire	CP Wire	
(°C)	(mm)	(s)	(s)	(mm)	(s)	(s)	(mm)	(s)	(s)	(°C)
102 to 115	10	1[a]	4	20	2	5	30	3	6	400
116 to 135	10	1[a]	4	20	3	6	30	5	8	
136 to 150	10	3	6	20	5	8	30	5	8	

Note:
a: Auxiliary Heat Sink Fixture is Required to Avoid ATCO Cutting off Unexpectedly.

All Rights Reserved by Xiamen SET Electronics Co., Ltd. 2024-2026 V1.1

Wave Soldering

The wave soldering parameters as Table P-2, for reference only, when ATCO is for practice use, you need to do some validation experiments. For example, using X-RAY to see the fusible alloy of ATCO whether damage after wave soldering.

TABLE P-2 Wave Soldering Parameters Setting

Rated Functioning Temp. (T_f)	Max. Allowable Preheating Temp. When the Length of Lead Wire is Different (Fig.P-1)				Preheating Time (t_1)	Max. Wave Soldering Temp.	Dwelling Time (t_2)	Cooling Time (t_3)
	L_s Length	Preheating Temp.	L_s Length	Preheating Temp.				
(°C)	(mm)	(°C)	(mm)	(°C)	(s)	(°C)	(s)	(s)
102 to 130	Recommend Hand-Soldering							
131 to 150	20	80	30	90	< 60	≤ 260	≤ 3	≤ 10

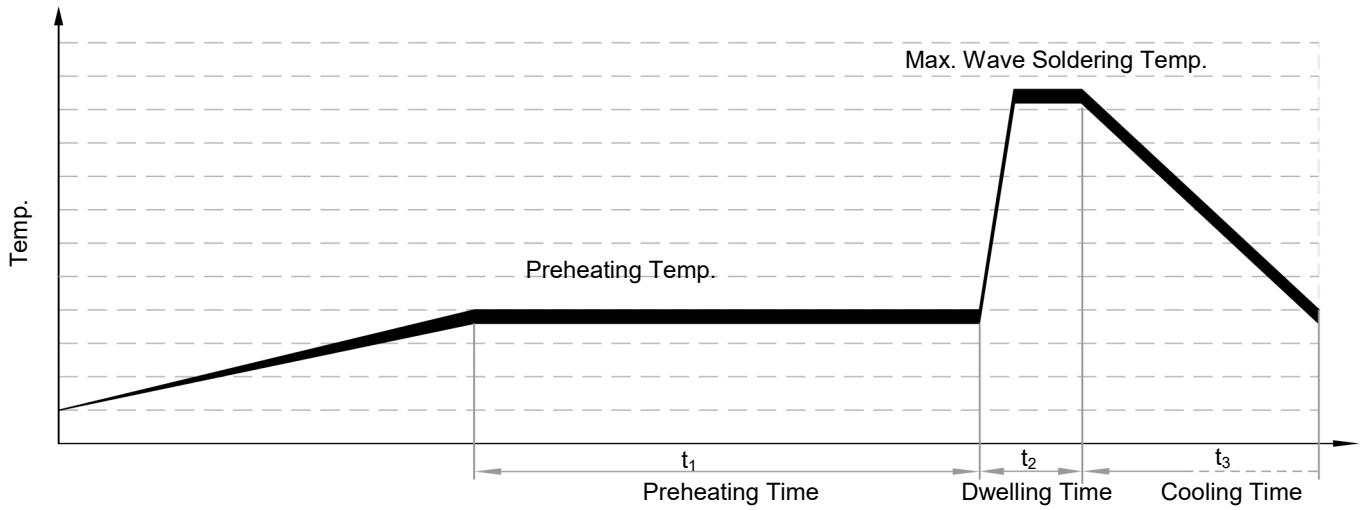

All Rights Reserved by Xiamen SET Electronics Co., Ltd. 2024-2026 V1.1

Product Temp.-Time Curve (Reference)

The Temp.-Time Curve of Thermal-Link in different temp. oil bath.

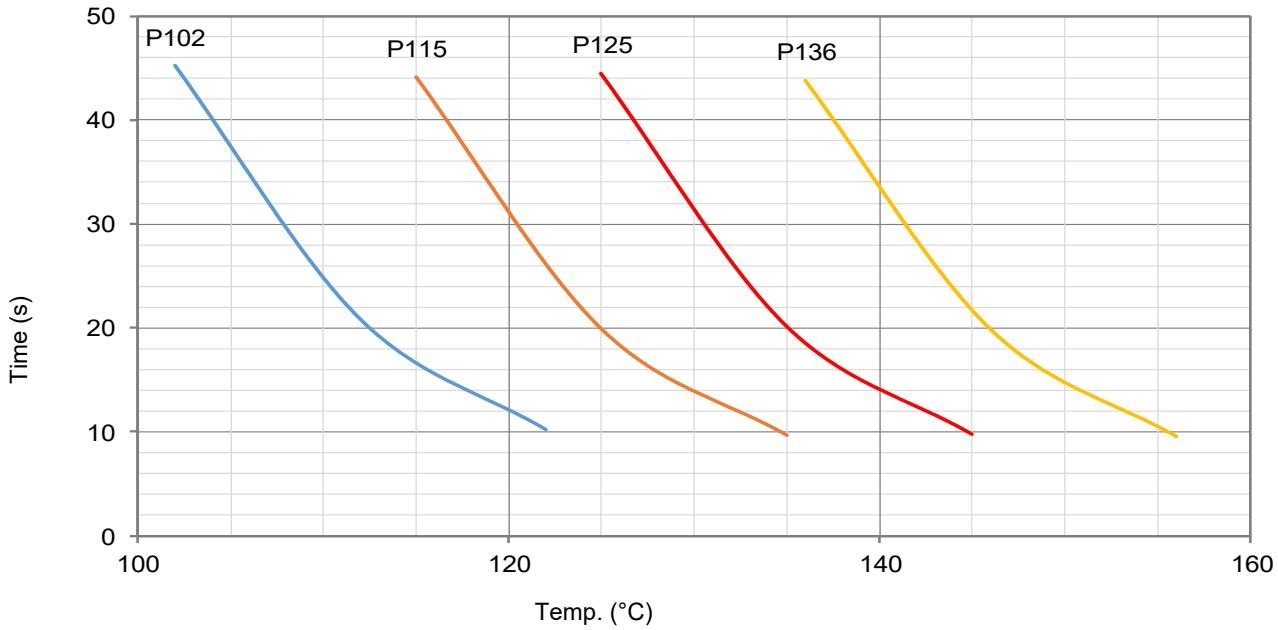

Product Current-Time Curve (Reference)

The Current-Time Curve shows functioning time at multi-times rated current at room temperature 25 ± 2 °C.

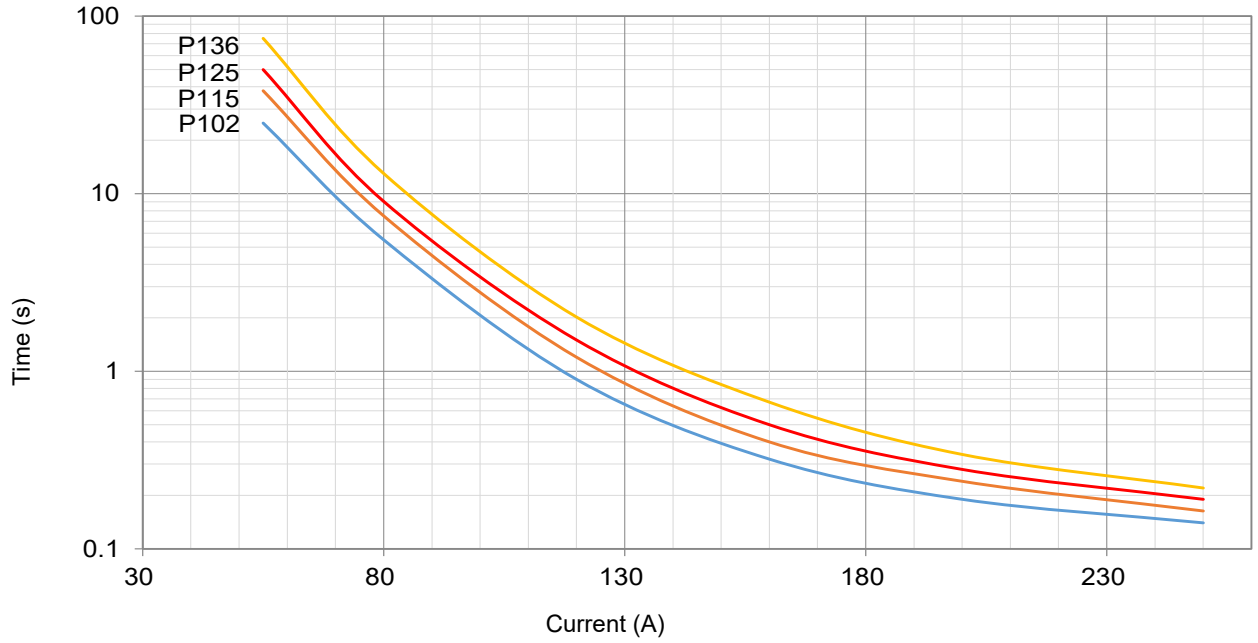

All Rights Reserved by Xiamen SET Electronics Co., Ltd. 2024-2026 V1.1

Packaging Information

Bulk

Item	PE Bag	PE Bag	Carton
Dimensions (mm)	135 × 85	190 × 180	440 × 300 × 260
Quantity (PCS)	30	180	9000
Gross Weight (kg)			24.0 ± 10%

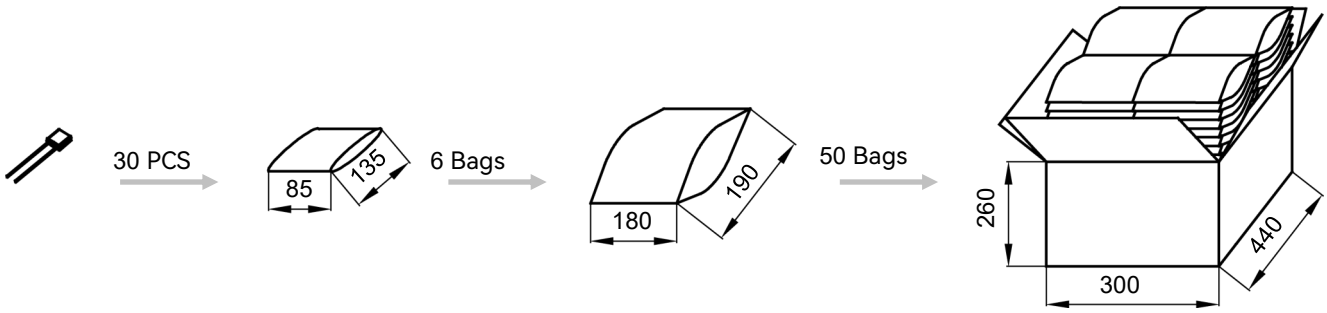

All Rights Reserved by Xiamen SET Electronics Co., Ltd. 2024-2026 V1.1

Part Numbering System

ATCO - P 115 - A N N A B - 001

Other Options

Packing

B	Bulk
T	Taping

Leads Forming

A	Straight Lead
B	Single Lead Bending
C	Leads Bending
D	Leads Kinking
E	Leads Bending and Kinking

Color of Insulation Tube

N	None

Insulation Tube Material

N	None

Lead Wire Type

A	Tinned Copper Wire

Rated Functioning Temp.

115	115 °C, See Specifications

Series

P	Series See Specifications

Product Category

ATCO	Alloy Thermal-Link

All Rights Reserved by Xiamen SET Electronics Co., Ltd. 2024-2026 V1.1

Thermal-Link (ATCO)-Alloy Type

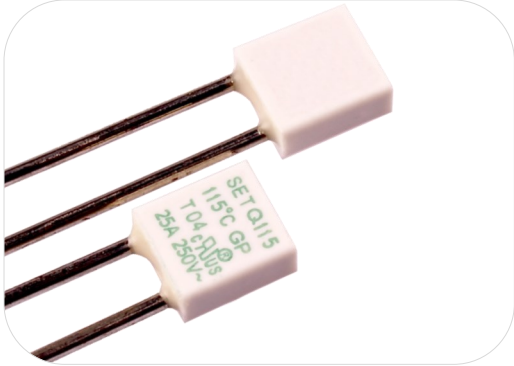

Description

Thermal-Link (ATCO)-Alloy Type is defined as a non-resettable protective device functioning one time only. It is widely used in electrical equipment. ATCO is mainly consist of fusible alloy, flux resin, case, sealant and lead wires. Normally, fusible alloy is jointed to the two lead wires. Under abnormal conditions, when the temp. reaches to the fusing temp. of ATCO, the fusible alloy melts and quickly retracts to the two lead wire ends with the aid of the flux resin and disconnects the circuit completely.

SETsafe | SETfuse Thermal-Link (ATCO)-Alloy Type Q series Rated Functioning Temp. from 102 ℃ to 136 ℃, Rated Current: 25A, safety certification Includes UL, cUL, TUV, CCC, PSE, and complies with RoHS and REACH.

Features

- Non-Resettable
- High Accuracy of Functioning Temp.
- High Surge Capacity
- RoHS & REACH Compliant

Applications

- Surge Protective Devices
- Power Strips
- Lamps
- Switched-Mode Power Supplies
- Home Electrical Appliances
- Batteries

Customization

- Other Temp.
- The Length of Lead Wires
- Leads Forming Types

Structure Diagrams

Radial

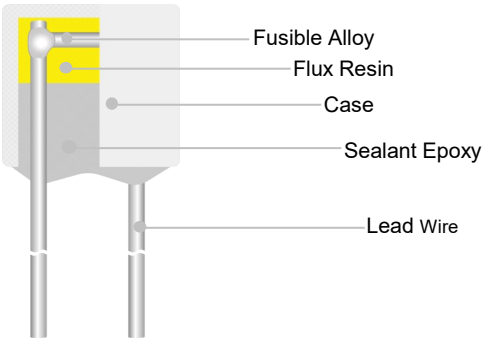

Marking

Radial (Color for reference only)

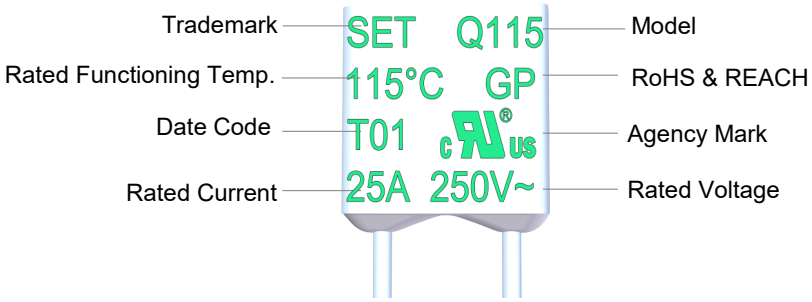

Remark: The Date Code means Year and quarter: A stands for 2000, B stands for 2001 and 01 stands for the first quarter, 02 stands for the second quarter, and so on.

Dimensions (mm)

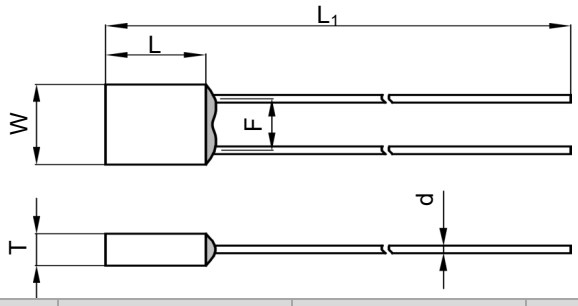

L	L_1	W	T	d	F
11.5 ± 0.5	50.0 ± 2.0	10.8 ± 0.5	4.8 ± 0.2	1.60 ± 0.05	6.6 ± 0.8

All Rights Reserved by Xiamen SET Electronics Co., Ltd. 2024-2026 V1.1

Specifications

Rated Functioning Temp. (T_f) °C

	Model	Fusing Temp.	T_h	T_m	I_r	U_r	I_n 8 / 20 μs (15 Times)	I_{max} 8 / 20 μs (1 Time)	UL	cUL	TUV	PSE	CCC	RoHS REACH
		(°C)	(°C)	(°C)	(A)	(V)	(kA)	(kA)	UL	cUL	TUV	PSE	CCC	
136	Q136	131 ± 2	102 92[a]	200	25	AC 250	15	30	●	●	○	●	○	●
						AC 300			●	●	○	●	○	●
						AC 400			○	○	●	●	●	●
						DC 120			○	○	●	○	●	●
125	Q125	121 ± 2	90 80[a]	200	25	AC 250	15	30	○	○	○	●	○	●
						AC 400			○	○	●	●	●	●
						DC 120			○	○	●	○	●	●
115	Q115	111 ± 2	82 72[a]	200	25	AC 250	15	30	●	●	○	●	○	●
						AC 300			●	●	○	●	○	●
						AC 400			○	○	●	●	●	●
						DC 120			○	○	●	○	●	●
102	Q102	98 ± 3	66 50[a]	200	25	AC 250	12	25	○	○	○	●	○	●
						AC 400			○	○	●	●	●	●
						DC 120			○	○	●	○	●	●

Note:

1: "●"Means certificated, "○"Means non-certificated.

2: RoHS & REACH Compliant .

All Rights Reserved by Xiamen SET Electronics Co., Ltd. 2024-2026 V1.1

Agency Information

Agency Symbol	Standards	The File No. and certification No. obtained by SETsafe | SETfuse
	UL 60691	E214712
	CAN-CSA-E60691	E214712
	EN 60691	R50259029
	J60691	JET2121-32001-2032、JET2121-32001-2033
	GB 9816.1	2020980205000180

Soldering

Hand-Soldering

1. Soldering should be carried out according to Table Q-1.
2. The thermal element of ATCO is fusible alloy with low melting point, which is jointed with ATCO lead wires. Improper soldering operation (too high soldering temp. , too long soldering time, too short lead wire etc.) may transfer more heat to the thermal element and ATCO may open in advance.
3. When soldering conditions are more severe than those listed in Table Q-1, a heat sink fixture should be used between soldering point and ATCO body.
4. When soldering, please do not pull / push or twist ATCO body or lead wires.
5. After soldering, let it naturally cool for longer than 20 seconds. During cooling, never move the ATCO body or lead wires.

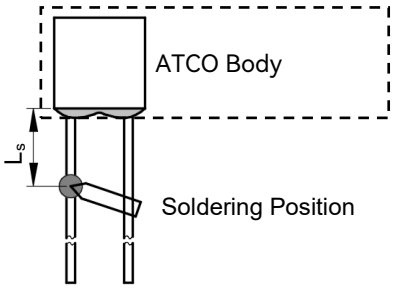

FIGURE Q-1

TABLE Q-1 Hand-Soldering Time

Rated Functioning Temp. (T_f)	Max. Allowable Soldering Time for Different Lead Wire Length (Fig.Q-1)									Max. Soldering Temp.
	L_s Length	Time		L_s Length	Time		L_s Length	Time		
		Tinned Copper Wire	CP Wire		Tinned Copper Wire	CP Wire		Tinned Copper Wire	CP Wire	
(°C)	(mm)	(s)	(s)	(mm)	(s)	(s)	(mm)	(s)	(s)	(°C)
102 to 115	10	1[a]	4	20	2	5	30	3	6	400
116 to 135	10	1[a]	4	20	3	6	30	5	8	
136 to 150	10	3	6	20	5	8	30	5	8	

Note:
a: Auxiliary Heat Sink Fixture is Required to Avoid ATCO Cutting off Unexpectedly.

All Rights Reserved by Xiamen SET Electronics Co., Ltd. 2024-2026 V1.1

Wave Soldering

The wave soldering parameters as Table Q-2, for reference only, when ATCO is for practice use, you need to do some validation experiments. For example, using X-RAY to see the fusible alloy of ATCO whether damage after wave soldering.

TABLE Q-2 Wave Soldering Parameters Setting

Rated Functioning Temp. (T_f)	Max. Allowable Preheating Temp. When the Length of Lead Wire is Different (Fig.Q-1)				Preheating Time (t_1)	Max. Wave Soldering Temp.	Dwelling Time (t_2)	Cooling Time (t_3)
	L_s Length	Preheating Temp.	L_s Length	Preheating Temp.				
(°C)	(mm)	(°C)	(mm)	(°C)	(s)	(°C)	(s)	(s)
102 to 130	Recommend Hand-Soldering							
131 to 150	20	80	30	90	< 60	≤ 260	≤ 3	≤ 10

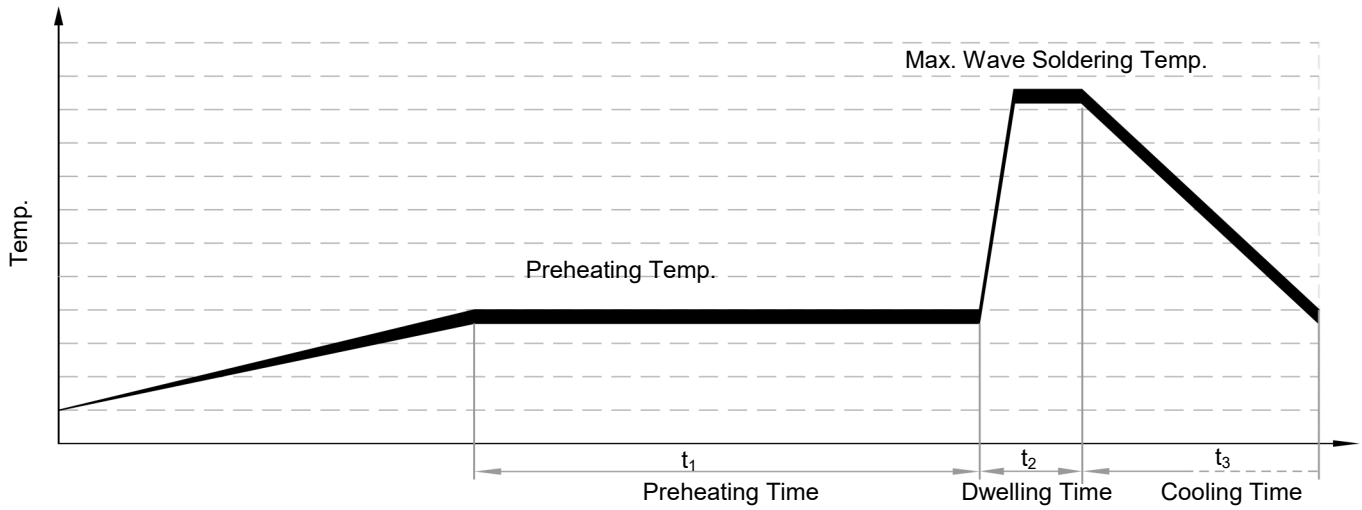

All Rights Reserved by Xiamen SET Electronics Co., Ltd. 2024-2026 V1.1

Product Temp.-Time Curve (Reference)

The Temp.-Time Curve of Thermal-Link in different temp. oil bath.

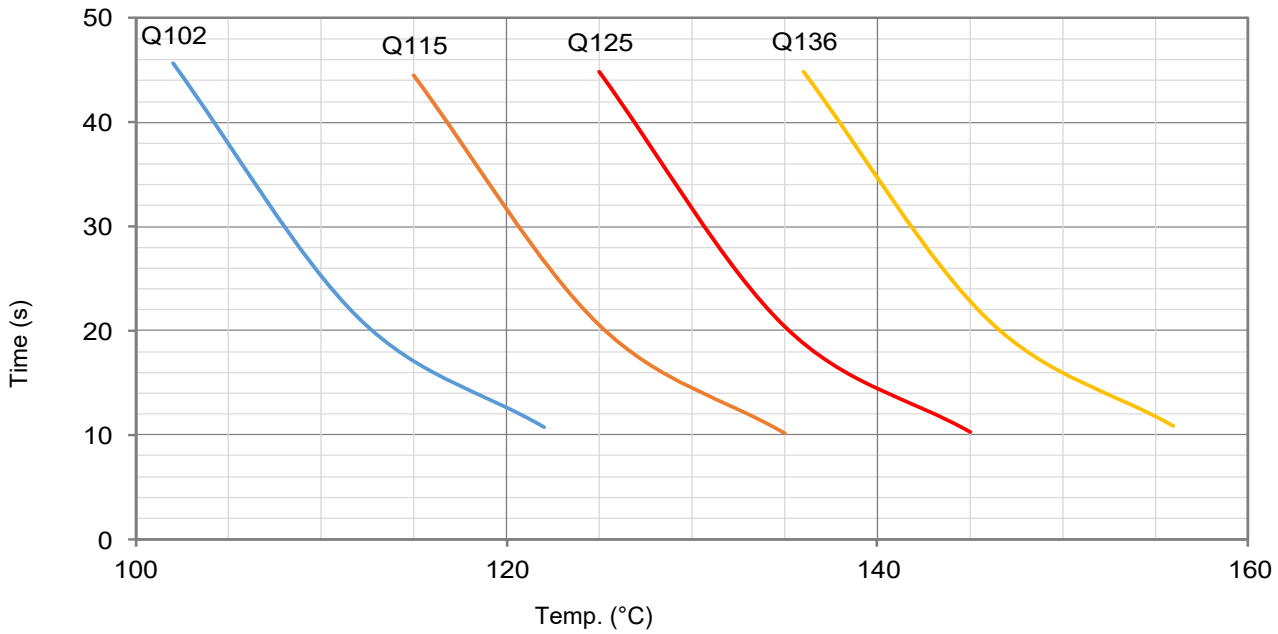

Product Current-Time Curve (Reference)

The Current-Time Curve shows functioning time at multi-times rated current at room temperature 25 ± 2 °C.

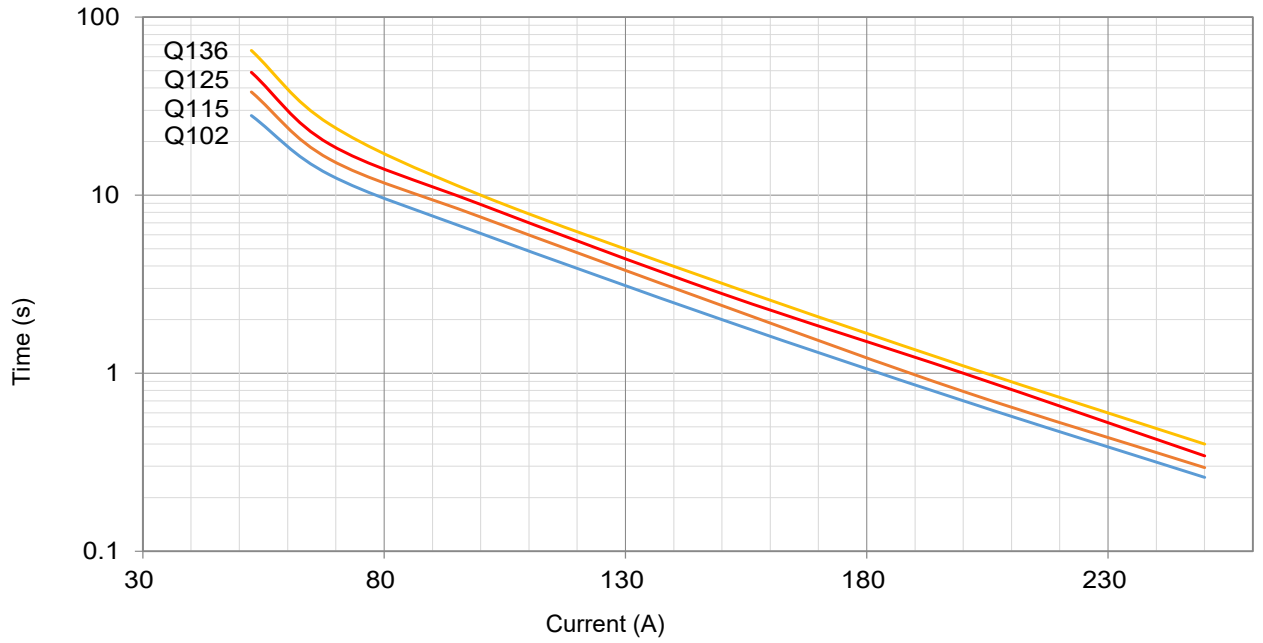

All Rights Reserved by Xiamen SET Electronics Co., Ltd. 2024-2026 V1.1

Packaging Information

Bulk

Item	PE Bag	PE Bag	Carton
Dimensions (mm)	135 × 85	190 × 180	440 × 300 × 260
Quantity (PCS)	30	180	9000
Gross Weight (kg)			24.0 ± 10%

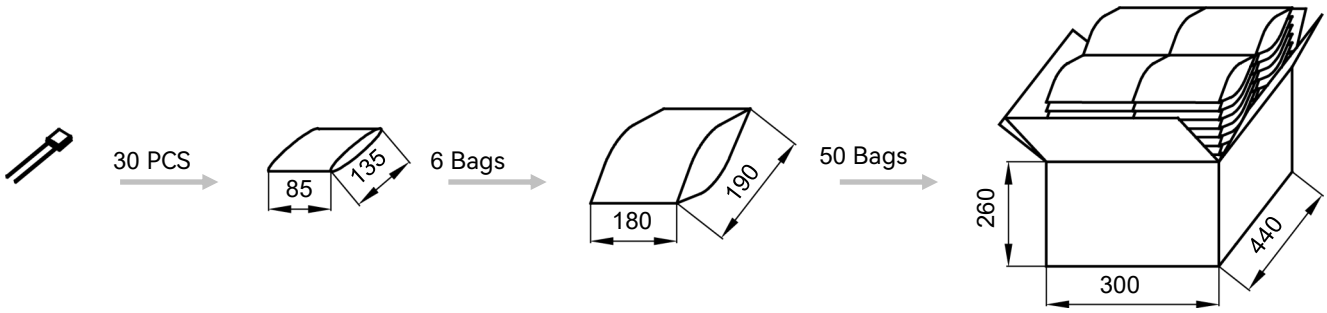

All Rights Reserved by Xiamen SET Electronics Co., Ltd. 2024-2026 V1.1

Part Numbering System

ATCO Q 115 - A N N A B - 001

Other Options

Packing

- B Bulk
- T Taping

Leads Forming

- A Straight Lead
- B Single Lead Bending
- C Leads Bending
- D Leads Kinking
- E Leads Bending and Kinking

Color of Insulation Tube

- N None

Insulation Tube Material

- N None

Lead Wire Type

- A Tinned Copper Wire

Rated Functioning Temp.

- 115 115 °C, See Specifications

Series

- Q Series See Specifications

Product Category

- ATCO Alloy Thermal-Link

All Rights Reserved by Xiamen SET Electronics Co., Ltd. 2024-2026 V1.1

Thermal-Link (ATCO)-Alloy Type

Description

Thermal-Link (ATCO)-Alloy Type is defined as a non-resettable protective device functioning one time only. It is widely used in electrical equipment. ATCO is mainly consist of fusible alloy, flux resin, case, sealant and lead wires. Normally, fusible alloy is jointed to the two lead wires. Under abnormal conditions, when the temp. reaches to the fusing temp. of ATCO, the fusible alloy melts and quickly retracts to the two lead wire ends with the aid of the flux resin and disconnects the circuit completely.

SETsafe | SETfuse Thermal-Link (ATCO)-Alloy Type SK series Rated Functioning Temp. from 102 ℃ to 221 ℃, Rated Current: 10A, safety certification Includes UL, cUL, TUV, PSE, CCC, and complies with RoHS and REACH.

Features

- Make a Mounting Hole
- Lead Wires Insulated
- Non-Resettable
- High Accuracy of Functioning Temp.
- RoHS & REACH Compliant

Applications

- Electric Heating Appliances
- Home Electrical Appliances

Customization

- Other Temp.
- The Length of Lead Wires
- Lead Wires can Make Pluggable Terminals

Structure Diagrams

Radial

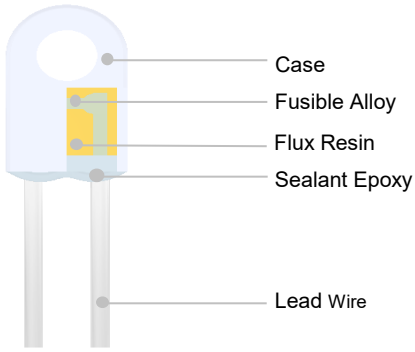

Marking

Radial (Color for reference only)

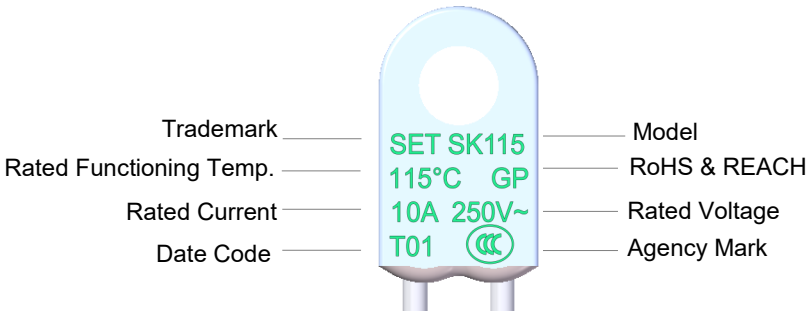

Remark: The Date Code means Year and quarter: A stands for 2000, B stands for 2001 and 01 stands for the first quarter, 02 stands for the second quarter, and so on.

Dimensions (mm)

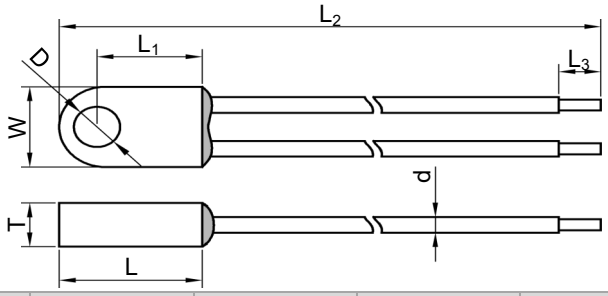

L	L_1	L_2	L_3	W	T	D	d
17.0 ± 1.0	12.5 ± 1.0	78.0 ± 3.0	5.0 ± 1.0	11.0 ± 1.0	6.0 ± 0.5	5.5 ± 1.0	UL1332 18AWG

All Rights Reserved by Xiamen SET Electronics Co., Ltd. 2024-2026 V1.1

Specifications

Rated Functioning Temp. (T_f) °C

	Model	Fusing Temp.	T_h	T_m	I_r	U_r	UL	cUL	TUV	PSE	CCC	RoHS REACH
		(°C)	(°C)	(°C)	(A)	(V)						
221	SK221	218 ± 2	186	250	10	AC 250	●	●	●	○	●	●
205	SK205	199 ± 3	167	250	10	AC 250	●	●	●	○	●	●
160	SK160	155 ± 2	130	200	10	AC 250	○	○	●	●	●	●
150	SK150	145 ± 2	120	200	10	AC 250	○	○	●	●	●	●
145	SK145	140 ± 2	115	200	10	AC 250	○	○	●	●	●	●
135	SK135	130 ± 2	105	200	10	AC 250	○	○	●	●	●	●
130	SK130	125 ± 2	100	200	10	AC 250	○	○	●	●	●	●
125	SK125	121 ± 2	95	200	10	AC 250	○	○	●	●	●	●
115	SK115	111 ± 2	85	200	10	AC 250	○	○	●	●	●	●
102	SK102	98 ± 3	72	200	10	AC 250	○	○	●	●	●	●

Note:

1: "●"Means certificated, "○"Means non-certificated.

2: RoHS & REACH Compliant .

3: " a ": The temperature measurement point for holding temperature (T_h) shall be positioned 50 mm away from the product body, in accordance with the requirements specified in Appendix H.11.2 of IEC 60691:2015 and Appendix I of GB/T 9816.1-2023.

All Rights Reserved by Xiamen SET Electronics Co., Ltd. 2024-2026 V1.1

Agency Information

Agency Symbol	Standards	The File No. and certification No. obtained by SETsafe | SETfuse
	UL 60691	E214712
	CAN-CSA-E60691	E214712
	EN 60691	R50264747
	GB 9816.1	2020980205000182

Soldering

Hand-Soldering

1. Soldering should be carried out according to Table SK-1.
2. The thermal element of ATCO is fusible alloy with low melting point, which is jointed with ATCO lead wires. Improper soldering operation (too high soldering temp. , too long soldering time, too short lead wire etc.) may transfer more heat to the thermal element and ATCO may open in advance.
3. When soldering conditions are more severe than those listed in Table SK-1, a heat sink fixture should be used between soldering point and ATCO body.
4. When soldering, please do not pull / push or twist ATCO body or lead wires.
5. After soldering, let it naturally cool for longer than 20 seconds. During cooling, never move the ATCO body or lead wires.

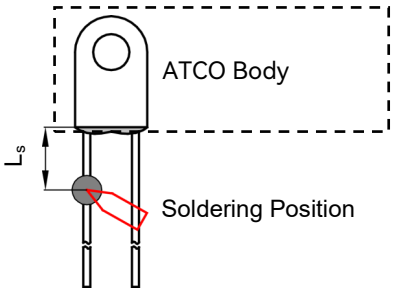

FIGURE SK-1

TABLE SK-1 Hand-Soldering Time

Rated Functioning Temp. (T_f)	Max. Allowable Soldering Time for Different Lead Wire Length (Fig.SK-1)									Max. Soldering Temp.
	L_s Length	Time		L_s Length	Time		L_s Length	Time		
		Tinned Copper Wire	CP Wire		Tinned Copper Wire	CP Wire		Tinned Copper Wire	CP Wire	
(°C)	(mm)	(s)	(s)	(mm)	(s)	(s)	(mm)	(s)	(s)	(°C)
102 to 115	10	1[a]	4	20	2	5	30	3	6	400
116 to 135	10	1[a]	4	20	3	6	30	5	8	
136 to 150	10	3	6	20	5	8	30	5	8	
151 to 230	10	4	7	20	6	9	30	7	10	

Note:
a: Auxiliary Heat Sink Fixture is Required to Avoid ATCO Cutting off Unexpectedly.

All Rights Reserved by Xiamen SET Electronics Co., Ltd. 2024-2026 V1.1

Wave Soldering

The wave soldering parameters as Table SK-2, for reference only, when ATCO is for practice use, you need to do some validation experiments. For example, using X-RAY to see the fusible alloy of ATCO whether damage after wave soldering.

TABLE SK-2 Wave Soldering Parameters Setting

Rated Functioning Temp. (T_f)	Max. Allowable Preheating Temp. When the Length of Lead Wire is Different (Fig.SK-1)				Preheating Time (t_1)	Max. Wave Soldering Temp.	Dwelling Time (t_2)	Cooling Time (t_3)
	L_s Length	Preheating Temp.	L_s Length	Preheating Temp.				
(°C)	(mm)	(°C)	(mm)	(°C)	(s)	(°C)	(s)	(s)
102 to 130	Recommend Hand-Soldering							
131 to 150	20	80	30	90	< 60	≤ 260	≤ 3	≤ 10
151 to 230	20	90	30	100	< 60	≤ 260	≤ 3	≤ 10

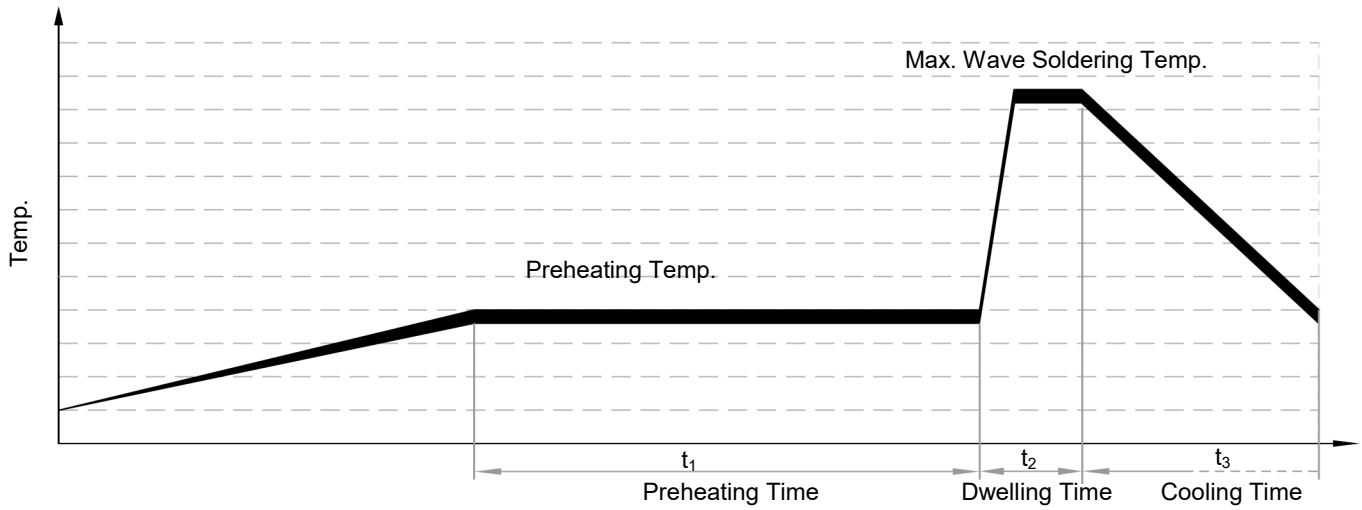

All Rights Reserved by Xiamen SET Electronics Co., Ltd. 2024-2026 V1.1

Product Temp.-Time Curve (Reference)

The Temp.-Time Curve of Thermal-Link in different temp. oil bath.

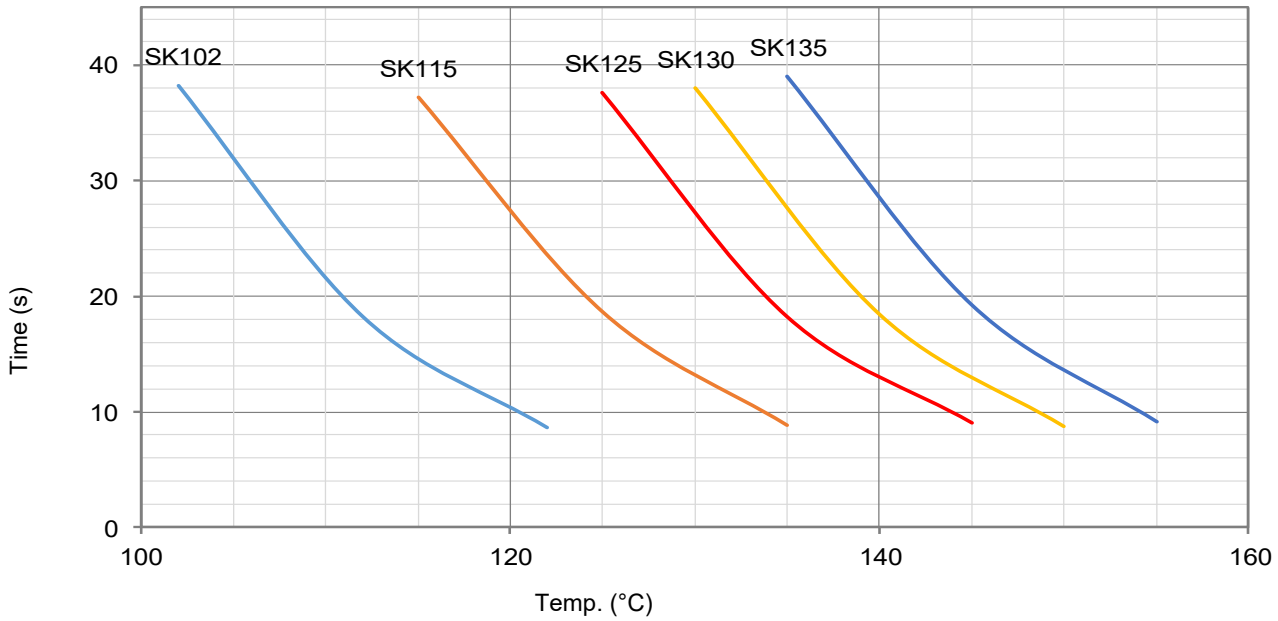

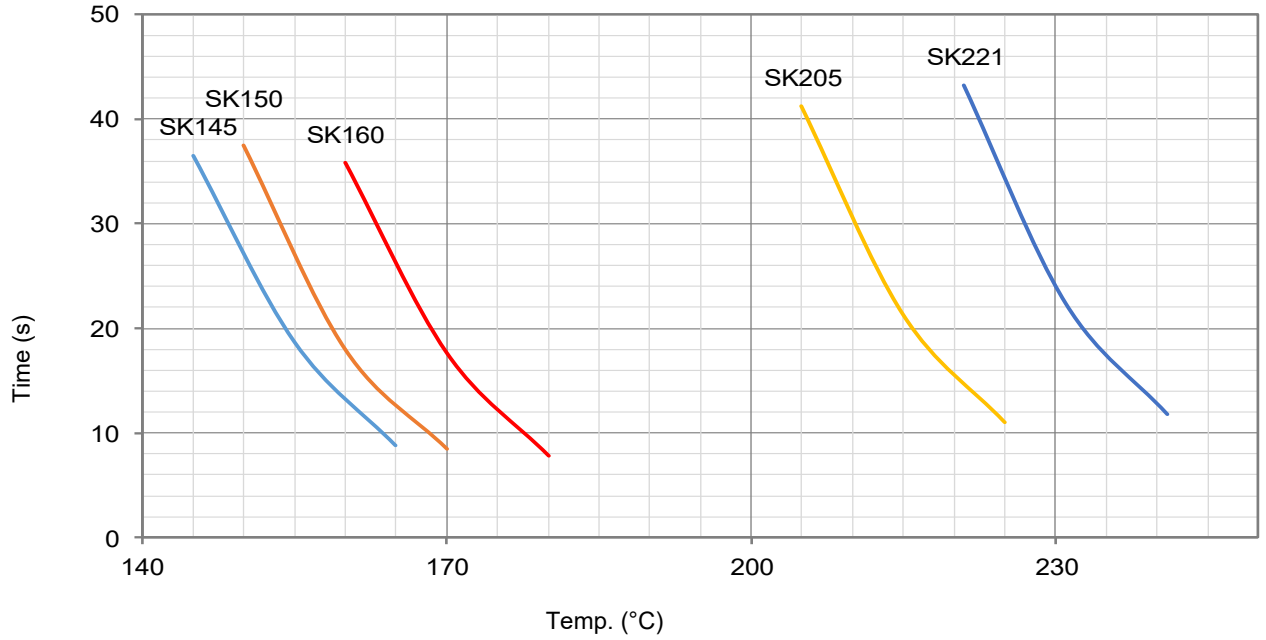

All Rights Reserved by Xiamen SET Electronics Co., Ltd. 2024-2026 V1.1

Product Current-Time Curve (Reference)

The Current-Time Curve shows functioning time at multi-times rated current at room temperature 25 ± 2 °C.

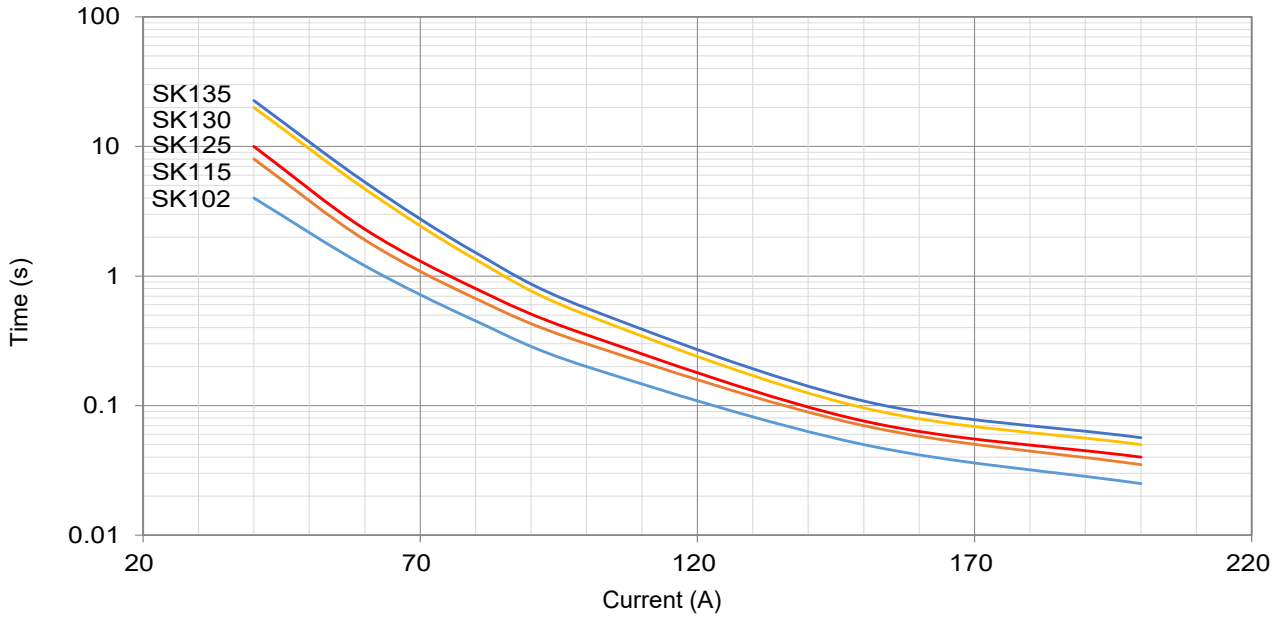

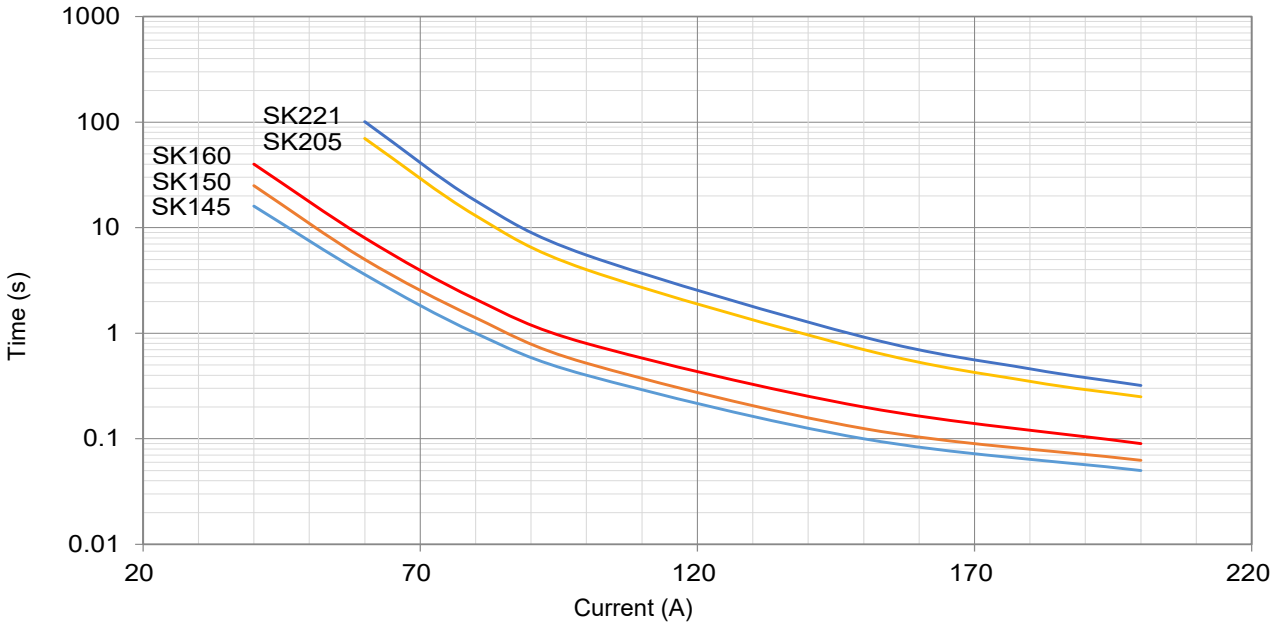

All Rights Reserved by Xiamen SET Electronics Co., Ltd. 2024-2026 V1.1

Packaging Information

Bulk

Item	PE Bag	Carton
Dimensions (mm)	190 × 180	440 × 300 × 260
Quantity (PCS)	50	3000
Gross Weight (kg)		18.0 ± 10%

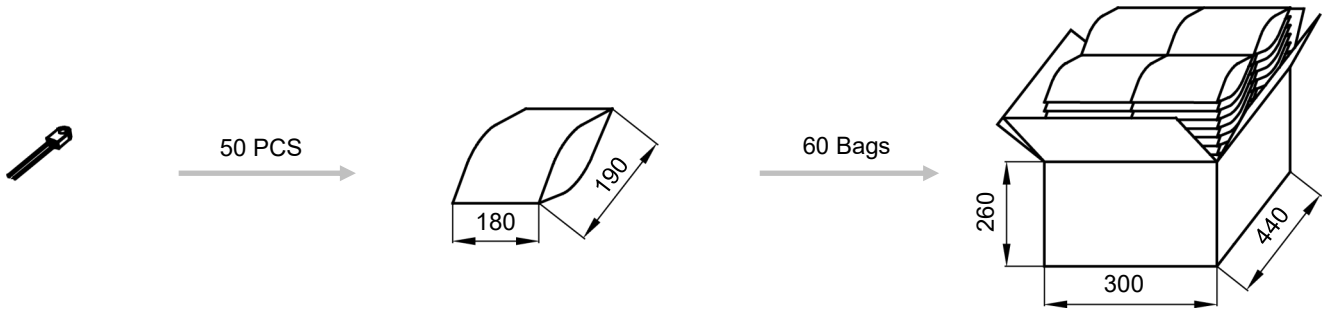

All Rights Reserved by Xiamen SET Electronics Co., Ltd. 2024-2026 V1.1

Part Numbering System

ATCO - SK115 - M T W A B - 001

Other Options

Packing

B	Bulk

Leads Forming

A	Straight Lead

Color of Insulation Tube

W	White
R	Red
K	Black
N	None

Insulation Tube Material

T	Teflon
S	Silicone
N	None

Lead Wire Type

M	Multi stranded tinned copper wire

Rated Functioning Temp.

115	115 °C, See Specifications

Series

SK	Series See Specifications

Product Category

ATCO	Alloy Thermal-Link

All Rights Reserved by Xiamen SET Electronics Co., Ltd. 2024-2026 V1.1

Thermal-Link (ATCO)-Alloy Type

Description

Thermal-Link (ATCO)-Alloy Type is defined as a non-resettable protective device functioning one time only. It is widely used in electrical equipment. ATCO is mainly consist of fusible alloy, flux resin, case, sealant and lead wires. Normally, fusible alloy is jointed to the two lead wires. Under abnormal conditions, when the temp. reaches to the fusing temp. of ATCO, the fusible alloy melts and quickly retracts to the two lead wire ends with the aid of the flux resin and disconnects the circuit completely.

SETsafe | SETfuse Thermal-Link (ATCO)-Alloy Type SE series Rated Functioning Temp. from 102 ℃ to 230 ℃, Rated Current: 10A, safety certification Includes PSE, CCC, TUV, and complies with RoHS and REACH.

Features

- Make a Mounting Hole
- Lead Wires Insulated
- Non-Resettable
- High Accuracy of Functioning Temp.
- RoHS & REACH Compliant

Applications

- Electric Heating Appliances
- Home Electrical Appliances

Customization

- Other Temp.
- The Length of Lead Wires
- Lead Wires can Make Pluggable Terminals

Structure Diagrams

Radial

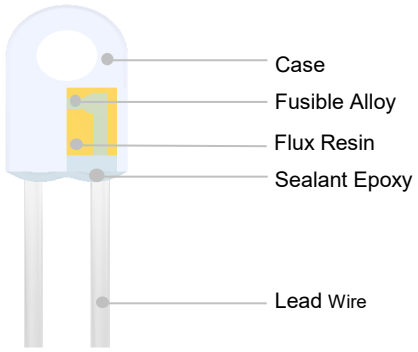

Marking

Radial (Color for reference only)

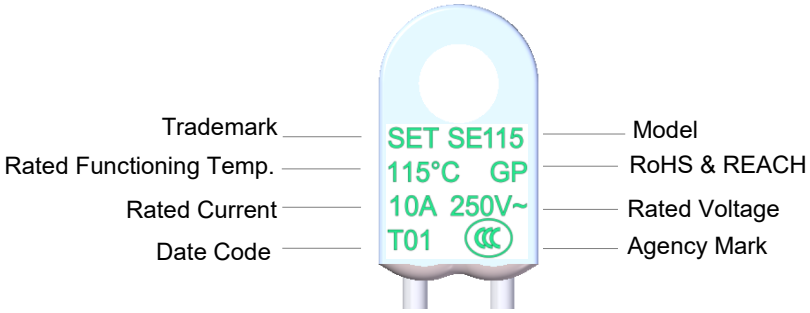

Remark: The Date Code means Year and quarter: A stands for 2000, B stands for 2001 and 01 stands for the first quarter, 02 stands for the second quarter, and so on.

Dimensions (mm)

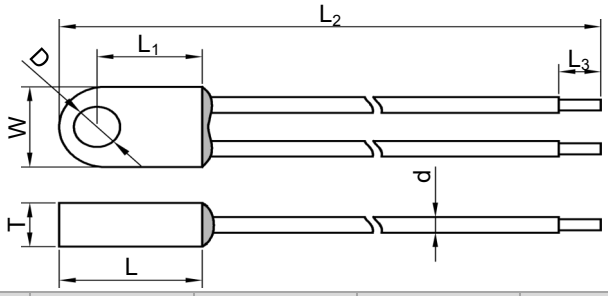

L	L_1	L_2	L_3	W	T	D	d
16.0 ± 1.0	11.5 ± 1.0	93.0 ± 3.0	5.0 ± 1.0	9.0 ± 1.0	4.0 ± 0.5	4.5 ± 1.0	UL1332 18AWG

All Rights Reserved by Xiamen SET Electronics Co., Ltd. 2024-2026 V1.1

Specifications

Rated Functioning Temp. (T_f) °C

	Model	Fusing Temp. (°C)	T_h (°C)	T_m (°C)	I_r (A)	U_r (V)	PSE	CCC	TUV	RoHS REACH
230	SE230	225 ± 2	190 186[a]	380	10	AC 250	○	●	●	●
221	SE221	218 ± 2	186 182[a]	380	10	AC 250	○	○	●	●
200	SE200	196 ± 3	160 156[a]	380	10	AC 250	○	●	●	●
160	SE160	155 ± 2	126[a]	380	10	AC 250	○	○	●	●
150	SE150	145 ± 2	120 116[a]	380	10	AC 250	●	●	●	●
145	SE145	140 ± 2	115 111[a]	380	10	AC 250	●	●	●	●
135	SE135	130 ± 2	105 101[a]	380	10	AC 250	●	●	●	●
125	SE125	121 ± 2	95 91[a]	380	10	AC 250	●	●	●	●
115	SE115	111 ± 2	85 81[a]	380	10	AC 250	●	●	●	●
102	SE102	98 ± 3	72 64[a]	380	10	AC 250	●	●	●	●

Note:

1: "●"Means certificated, "○"Means non-certificated.

2: RoHS & REACH Compliant .

3: " a ": The temperature measurement point for holding temperature (T_h) shall be positioned 50 mm away from the product body, in accordance with the requirements specified in Appendix I of IEC 60691:2024 and Appendix I of GB/T 9816.1-2023.

All Rights Reserved by Xiamen SET Electronics Co., Ltd. 2024-2026 V1.1

Agency Information

Agency Symbol	Standards	The File No. and certification No. obtained by SETsafe | SETfuse
PS E	J60691	JET2121-32001-2029、JET2121-32001-2030 JET2121-32001-2031
	GB 9816.1	2020000205000017
	EN 60691	R507071530001

Soldering

Hand-Soldering

1. Soldering should be carried out according to Table T-1.
2. The thermal element of ATCO is fusible alloy with low melting point, which is jointed with ATCO lead wires. Improper soldering operation (too high soldering temp. , too long soldering time, too short lead wire etc.) may transfer more heat to the thermal element and ATCO may open in advance.
3. When soldering conditions are more severe than those listed in Table T-1, a heat sink fixture should be used between soldering point and ATCO body.
4. When soldering, please do not pull / push or twist ATCO body or lead wires.
5. After soldering, let it naturally cool for longer than 20 seconds. During cooling, never move the ATCO body or lead wires.

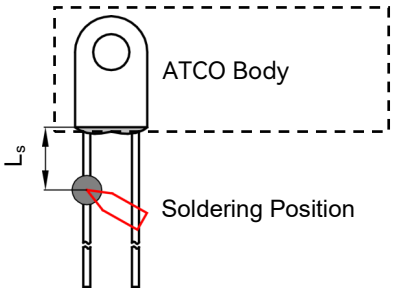

FIGURE T-1

TABLE T-1 Hand-Soldering Time

Rated Functioning Temp. (T_f)	Max. Allowable Soldering Time for Different Lead Wire Length (Fig.T-1)									Max. Soldering Temp.
	L_s Length	Time		L_s Length	Time		L_s Length	Time		
		Tinned Copper Wire	CP Wire		Tinned Copper Wire	CP Wire		Tinned Copper Wire	CP Wire	
(°C)	(mm)	(s)	(s)	(mm)	(s)	(s)	(mm)	(s)	(s)	(°C)
102 to 115	10	1[a]	4	20	2	5	30	3	6	400
116 to 135	10	1[a]	4	20	3	6	30	5	8	
136 to 150	10	3	6	20	5	8	30	5	8	
151 to 230	10	4	7	20	6	9	30	7	10	

Note:
a: Auxiliary Heat Sink Fixture is Required to Avoid ATCO Cutting off Unexpectedly.

All Rights Reserved by Xiamen SET Electronics Co., Ltd. 2024-2026 V1.1

Wave Soldering

The wave soldering parameters as Table T-2, for reference only, when ATCO is for practice use, you need to do some validation experiments. For example, using X-RAY to see the fusible alloy of ATCO whether damage after wave soldering.

TABLE T-2 Wave Soldering Parameters Setting

Rated Functioning Temp. (T_f)	Max. Allowable Preheating Temp. When the Length of Lead Wire is Different (Fig.T-1)				Preheating Time (t_1)	Max. Wave Soldering Temp.	Dwelling Time (t_2)	Cooling Time (t_3)
	L_s Length	Preheating Temp.	L_s Length	Preheating Temp.				
(°C)	(mm)	(°C)	(mm)	(°C)	(s)	(°C)	(s)	(s)
102 to 130	Recommend Hand-Soldering							
131 to 150	20	80	30	90	< 60	≤ 260	≤ 3	≤ 10
151 to 230	20	90	30	100	< 60	≤ 260	≤ 3	≤ 10

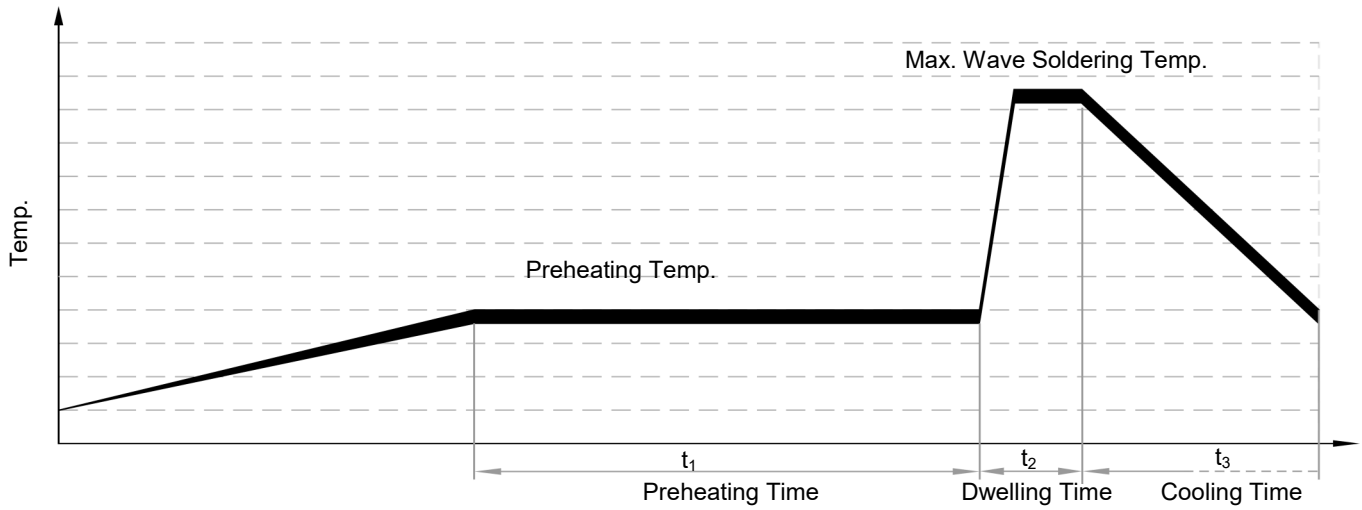

All Rights Reserved by Xiamen SET Electronics Co., Ltd. 2024-2026 V1.1

Product Temp.-Time Curve (Reference)

The Temp.-Time Curve of Thermal-Link in different temp. oil bath.

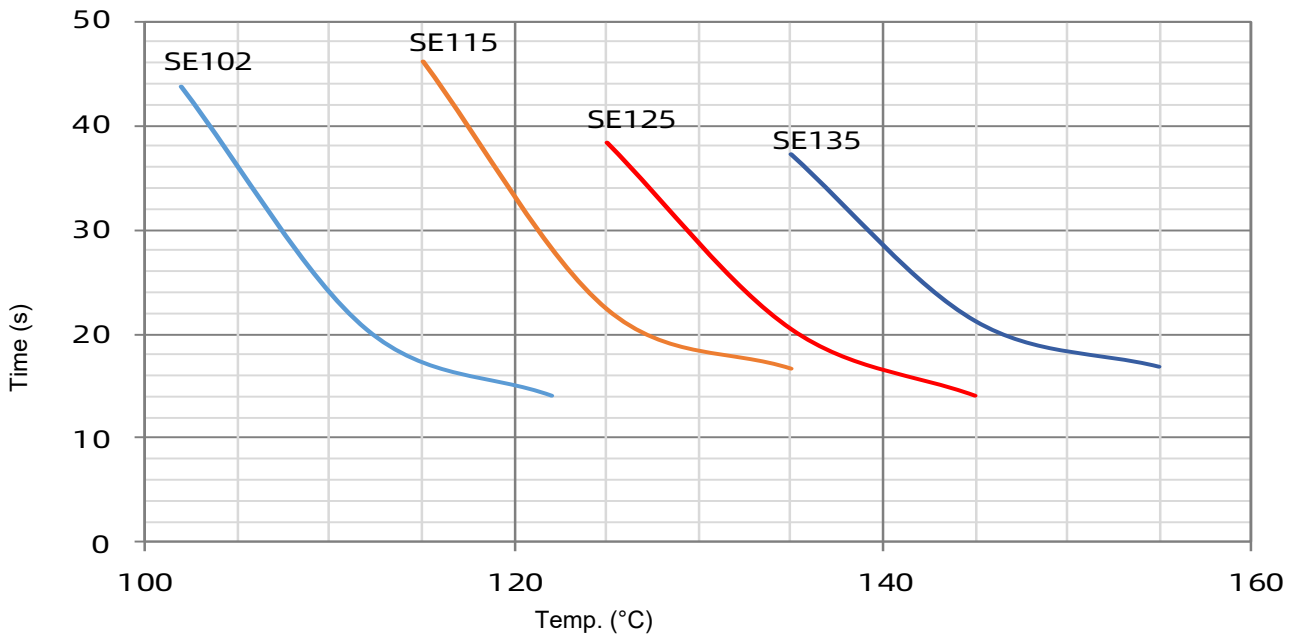

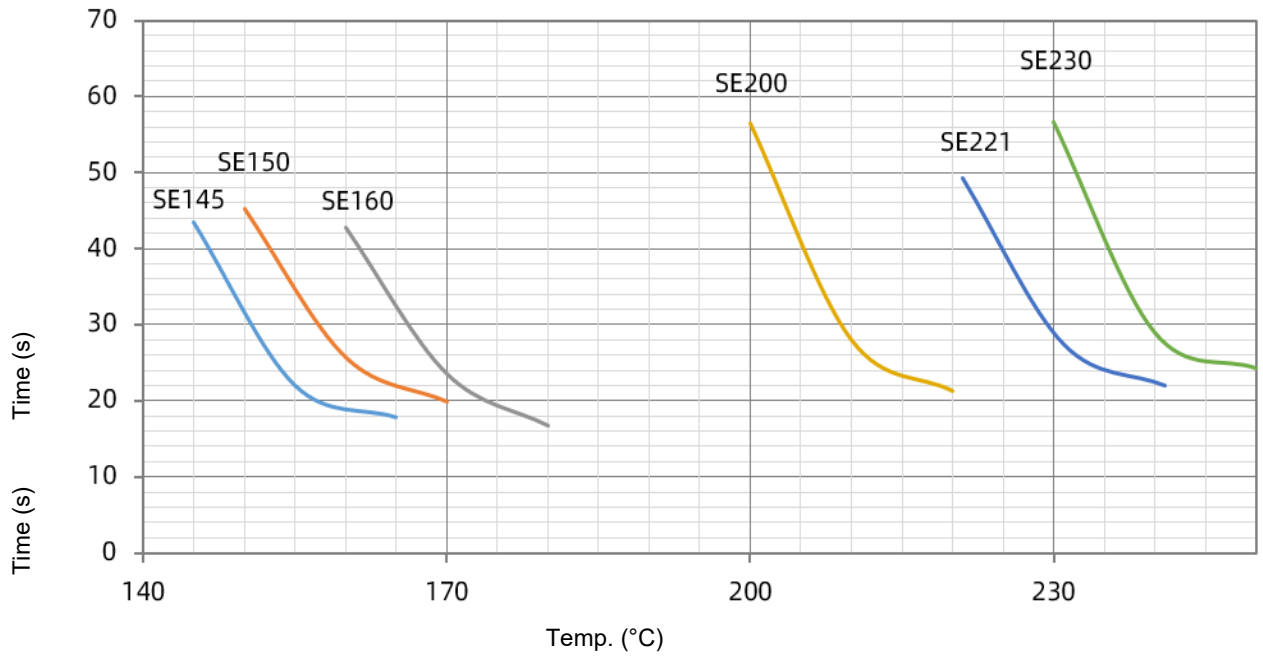

All Rights Reserved by Xiamen SET Electronics Co., Ltd. 2024-2026 V1.1

Product Current-Time Curve (Reference)

The Current-Time Curve shows functioning time at multi-times rated current at room temperature 25 ± 2 °C.

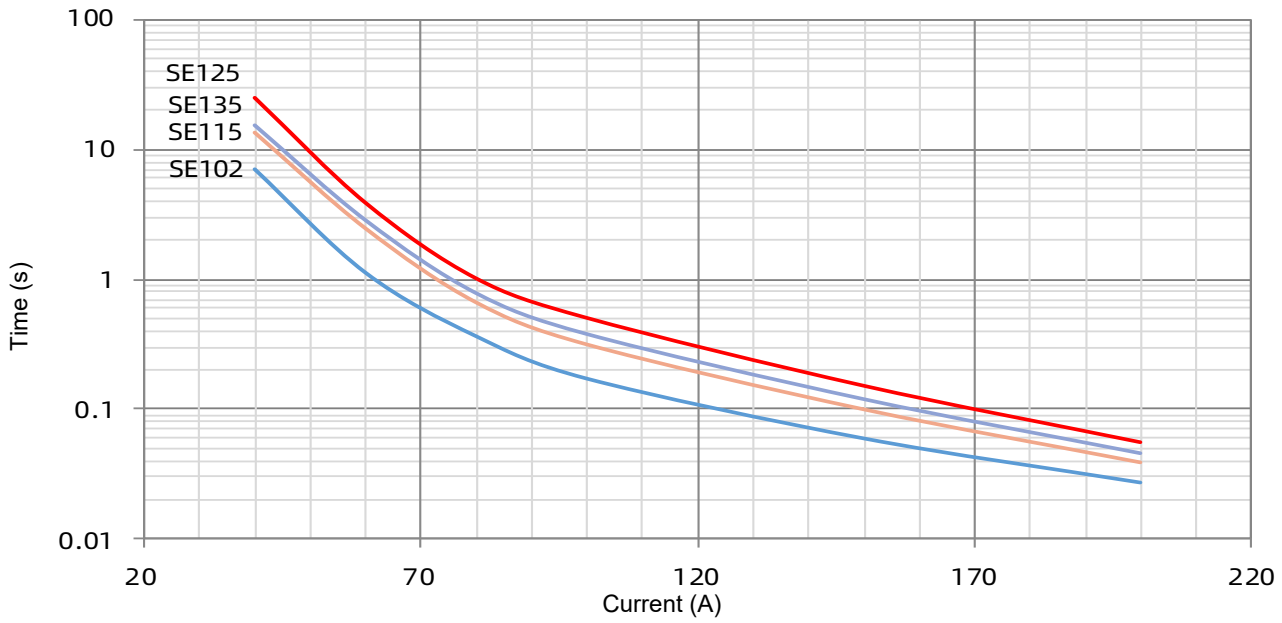

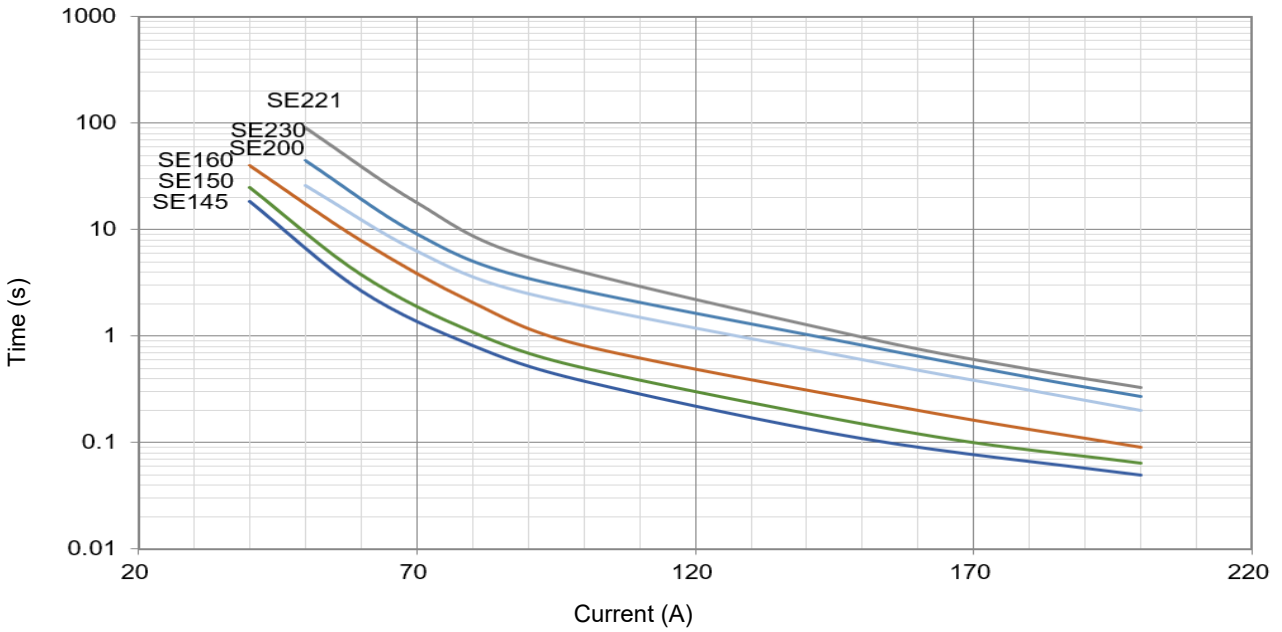

All Rights Reserved by Xiamen SET Electronics Co., Ltd. 2024-2026 V1.1

Packaging Information

Bulk

Item	PE Bag	Carton
Dimensions (mm)	190 × 180	440 × 300 × 260
Quantity (PCS)	50	3000
Gross Weight (kg)		16.0 ± 10%

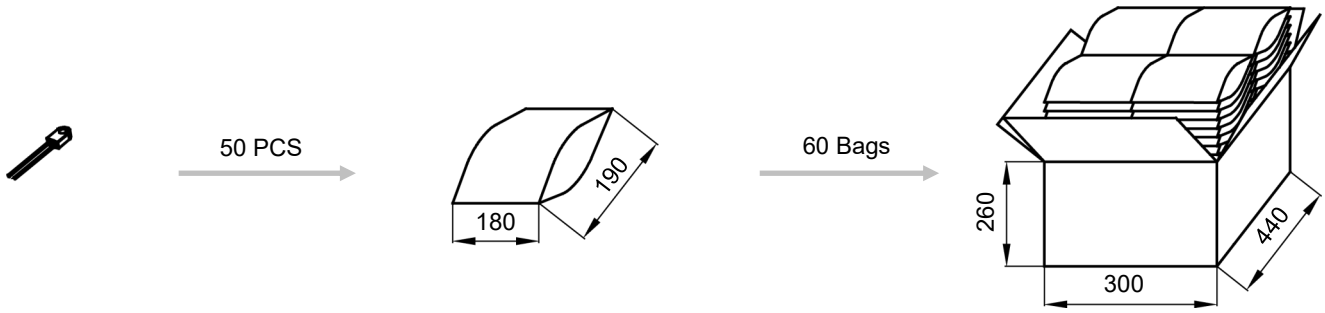

All Rights Reserved by Xiamen SET Electronics Co., Ltd. 2024-2026 V1.1

Part Numbering System

ATCO – SE115 - M T W A B - 001

Other Options

Packing

B Bulk

Leads Forming

A Straight Lead

Color of Insulation Tube

W White

Insulation Tube Material

T Teflon

Lead Wire Type

M Multi stranded tinned copper wire

Rated Functioning Temp.

115 115 °C, See Specifications

Series

SE Series
See Specifications

Product Category

ATCO Alloy Thermal-Link

All Rights Reserved by Xiamen SET Electronics Co., Ltd. 2024-2026 V1.1

Thermal-Link (ATCO)-Alloy Type

SKL Series

Description

Thermal-Link (ATCO)-Alloy Type is defined as a non-resettable protective device functioning one time only. It is widely used in electrical equipment. ATCO is mainly consist of fusible alloy, flux resin, case, sealant and lead wires. Normally, fusible alloy is jointed to the two lead wires. Under abnormal conditions, when the temp. reaches to the fusing temp. of ATCO, the fusible alloy melts and quickly retracts to the two lead wire ends with the aid of the flux resin and disconnects the circuit completely.

SETsafe | SETfuse Thermal-Link (ATCO)-Alloy Type SKL series Rated Functioning Temp. from 200 ℃ to 230 ℃, Rated Current: 10 A, safety certification Includes TUV, CCC, and complies with RoHS and REACH.

Features

- Make a Mounting Hole
- Lead Wires Insulated
- Non-Resettable
- High Accuracy of Functioning Temp.
- RoHS & REACH Compliant

Applications

- Electric Heating Appliances
- Home Electrical Appliances

Customization

- Other Temp.
- The Length of Lead Wires
- Lead Wires can Make Pluggable Terminals

Structure Diagrams

Radial

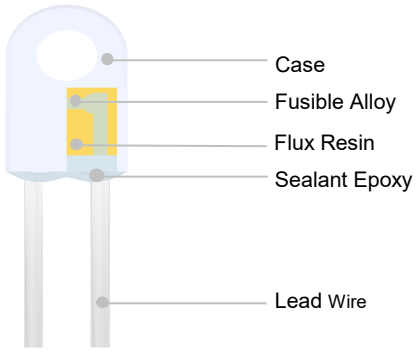

Marking

Radial (Color for reference only)

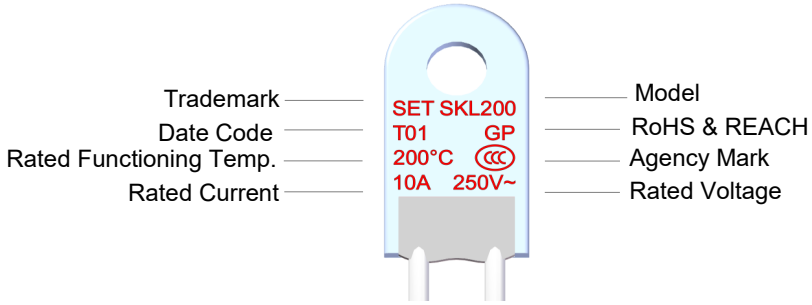

Remark: The Date Code means Year and quarter: A stands for 2000, B stands for 2001 and 01 stands for the first quarter, 02 stands for the second quarter, and so on.

Dimensions (mm)

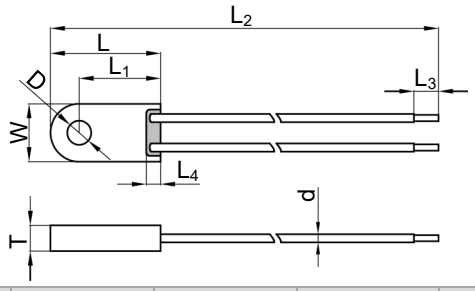

L	L_1	L_2	L_3	L_4	W	T	D	d
23.0 ± 1.0	17.0 ± 1.0	93.0 ± 3.0	5.0 ± 1.0	3.0 ± 0.5	12.0 ± 1.0	5.3 ± 0.5	5.0 ± 1.0	UL1332 18AWG

All Rights Reserved by Xiamen SET Electronics Co., Ltd. 2024-2026 V1.1

Specifications

Rated Functioning Temp. (T_f) °C	Model	Fusing Temp. (°C)	T_h (°C)	T_m (°C)	I_r (A)	U_r (V)	TUV	CCC	RoHS REACH
230	SKL230	225 ± 2	190 186[a]	380	10	AC 250	●	●	●
200	SKL200	196 ± 3	160 156[a]	380	10	AC 250	●	●	●

Note:

1: "●"Means certificated, "○"Means non-certificated.

2: RoHS & REACH Compliant .

3: " a ": The temperature measurement point for holding temperature (T_h) shall be positioned 50 mm away from the product body, in accordance with the requirements specified in Appendix H.11.2 of IEC 60691:2015 and Appendix I of GB/T 9816.1-2023.

All Rights Reserved by Xiamen SET Electronics Co., Ltd. 2024-2026 V1.1

Agency Information

Agency Symbol	Standards	The File No. and certification No. obtained by SETsafe | SETfuse
	EN 60691	R50337882
	GB 9816.1	2020980205000179

Soldering

Hand-Soldering

1. Soldering should be carried out according to Table SKL-1.
2. The thermal element of ATCO is fusible alloy with low melting point, which is jointed with ATCO lead wires. Improper soldering operation (too high soldering temp. , too long soldering time, too short lead wire etc.) may transfer more heat to the thermal element and ATCO may open in advance.
3. When soldering conditions are more severe than those listed in Table SKL-1, a heat sink fixture should be used between soldering point and ATCO body.
4. When soldering, please do not pull / push or twist ATCO body or lead wires.
5. After soldering, let it naturally cool for longer than 20 seconds. During cooling, never move the ATCO body or lead wires.

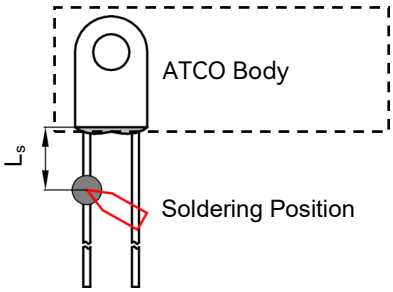

FIGURE SKL-1

TABLE SKL-1 Hand-Soldering Time

Rated Functioning Temp. (T_f)	Max. Allowable Soldering Time for Different Lead Wire Length (Fig.SKL-1)									Max. Soldering Temp.
	L_s Length	Time		L_s Length	Time		L_s Length	Time		
		Tinned Copper Wire	CP Wire		Tinned Copper Wire	CP Wire		Tinned Copper Wire	CP Wire	
(°C)	(mm)	(s)	(s)	(mm)	(s)	(s)	(mm)	(s)	(s)	(°C)
200 to 230	10	4	7	20	6	9	30	7	10	400

Note:
a: Auxiliary Heat Sink Fixture is Required to Avoid ATCO Cutting off Unexpectedly.

All Rights Reserved by Xiamen SET Electronics Co., Ltd. 2024-2026 V1.1

Wave Soldering

The wave soldering parameters as Table SKL-2, for reference only, when ATCO is for practice use, you need to do some validation experiments. For example, using X-RAY to see the fusible alloy of ATCO whether damage after wave soldering.

TABLE SKL-2 Wave Soldering Parameters Setting

Rated Functioning Temp. (T_f)	Max. Allowable Preheating Temp. When the Length of Lead Wire is Different (Fig.SKL-1)				Preheating Time (t_1)	Max. Wave Soldering Temp.	Dwelling Time (t_2)	Cooling Time (t_3)
	L_s Length	Preheating Temp.	L_s Length	Preheating Temp.				
(°C)	(mm)	(°C)	(mm)	(°C)	(s)	(°C)	(s)	(s)
200 to 230	20	90	30	100	< 60	≤ 260	≤ 3	≤ 10

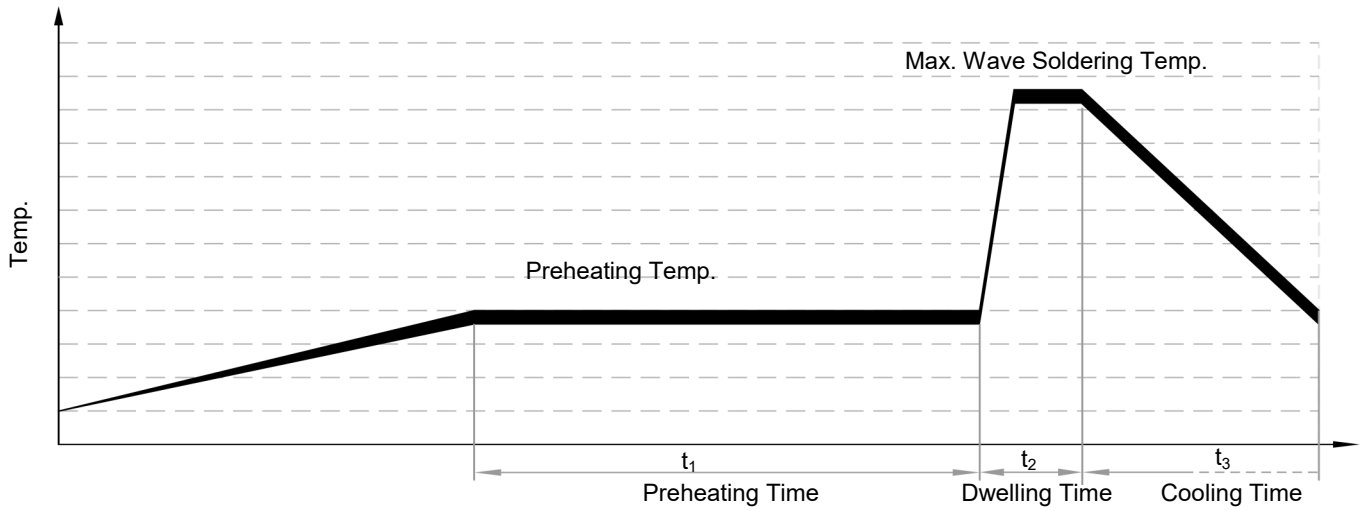

All Rights Reserved by Xiamen SET Electronics Co., Ltd. 2024-2026 V1.1

Product Temp.-Time Curve (Reference)

The Temp.-Time Curve of Thermal-Link in different temp. oil bath.

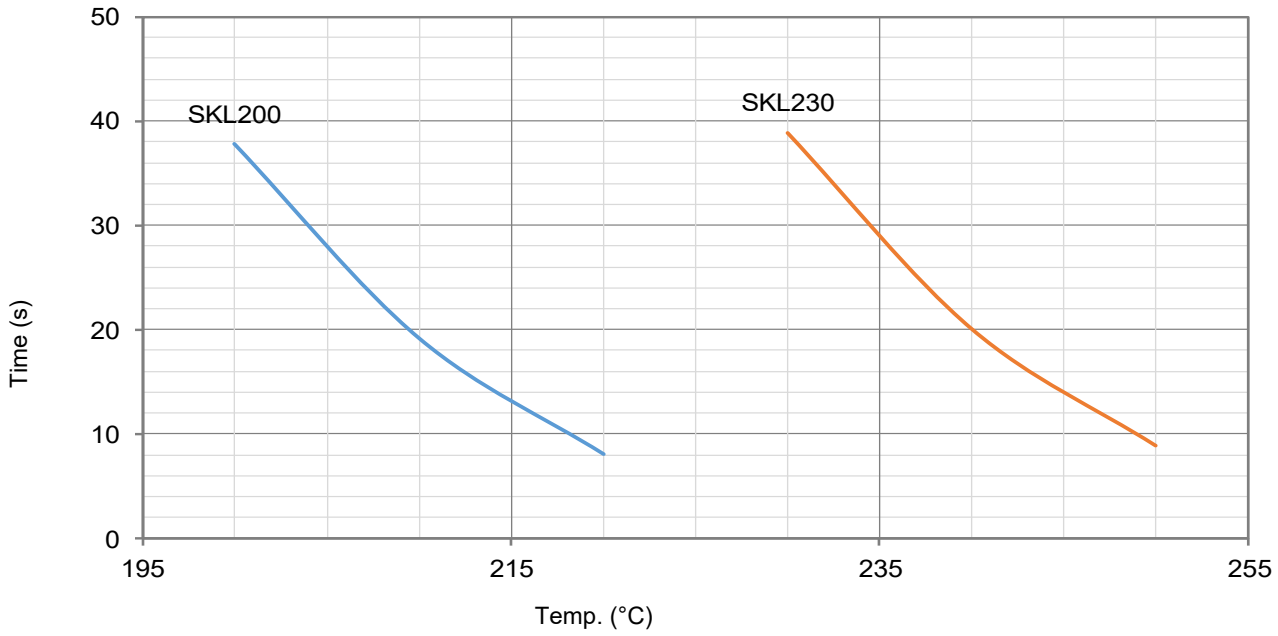

Product Current-Time Curve (Reference)

The Current-Time Curve shows functioning time at multi-times rated current at room temperature 25 ± 2 °C.

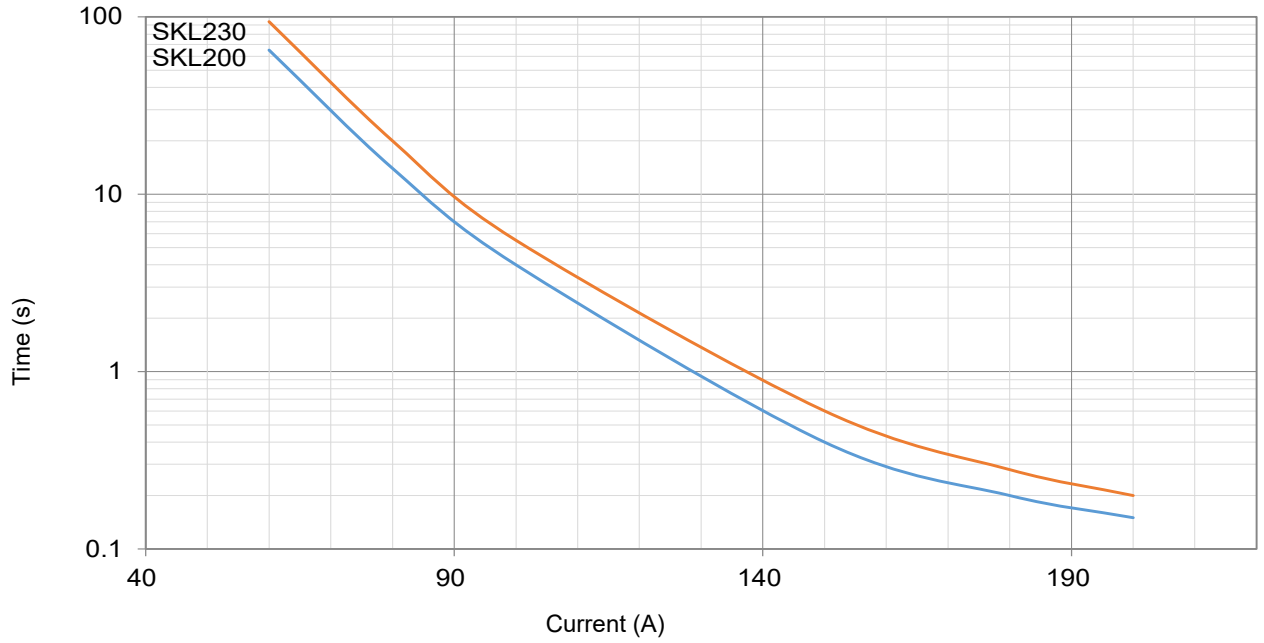

All Rights Reserved by Xiamen SET Electronics Co., Ltd. 2024-2026 V1.1

Packaging Information

Bulk

Item	PE Bag	Carton
Dimensions (mm)	190 × 180	440 × 300 × 260
Quantity (PCS)	50	3000
Gross Weight (kg)		17.5 ± 10%

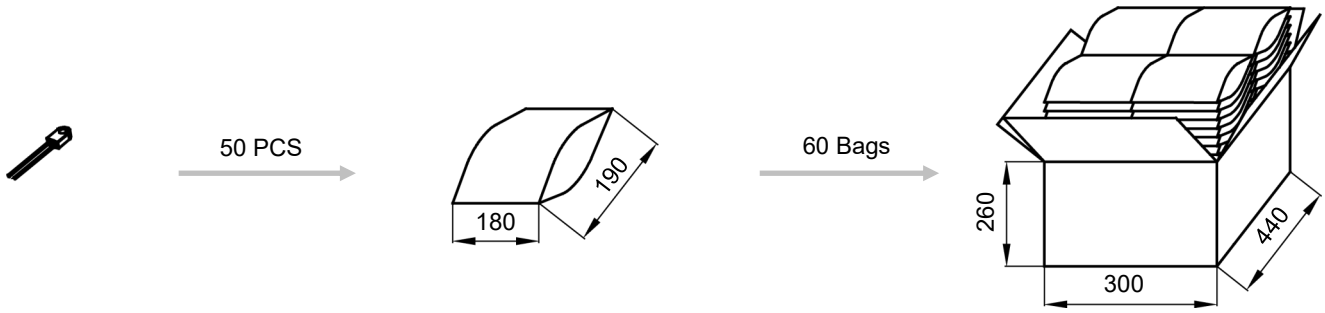

All Rights Reserved by Xiamen SET Electronics Co., Ltd. 2024-2026 V1.1

Part Numbering System

ATCO - SKL200 - M T W A B - 001

Other Options

Packing

B	Bulk

Leads Forming

A	Straight Lead

Color of Insulation Tube

W	White
R	Red
K	Black
N	None

Insulation Tube Material

T	Teflon
S	Silicone
N	None

Lead Wire Type

M	Multi stranded tinned copper wire

Rated Functioning Temp.

200	200 °C, See Specifications

Series

SKL	Series See Specifications

Product Category

ATCO	Alloy Thermal-Link

All Rights Reserved by Xiamen SET Electronics Co., Ltd. 2024-2026 V1.1

Thermal-Link (ATCO)-Alloy Type

Description

Thermal-Link (ATCO)-Alloy Type is defined as a non-resettable protective device functioning one time only. It is widely used in electrical equipment. ATCO is mainly consist of fusible alloy, flux resin, case, sealant and lead wires. Normally, fusible alloy is jointed to the two lead wires. Under abnormal conditions, when the temp. reaches to the fusing temp. of ATCO, the fusible alloy melts and quickly retracts to the two lead wire ends with the aid of the flux resin and disconnects the circuit completely.

SETsafe | SETfuse Thermal-Link (ATCO)-Alloy Type TK series Rated Functioning Temp. from 102 ℃ to 221 ℃, Rated Current: 15 A,16 A safety certification Includes UL, cUL, TUV, PSE, CCC, and complies with RoHS and REACH.

Features

- Make a Mounting Hole
- Lead Wires Insulated
- Non-Resettable
- High Accuracy of Functioning Temp.
- RoHS & REACH Compliant

Applications

- Electric Heating Appliances
- Home Electrical Appliances

Customization

- Other Temp.
- The Length of Lead Wires
- Lead Wires can Make Pluggable Terminals

Structure Diagrams

Radial

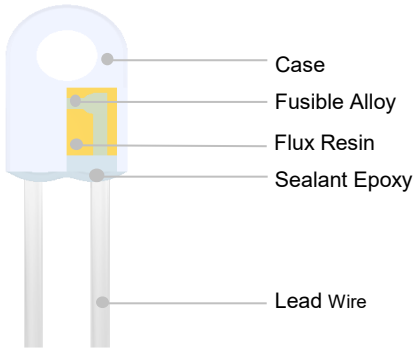

Marking

Radial (Color for reference only)

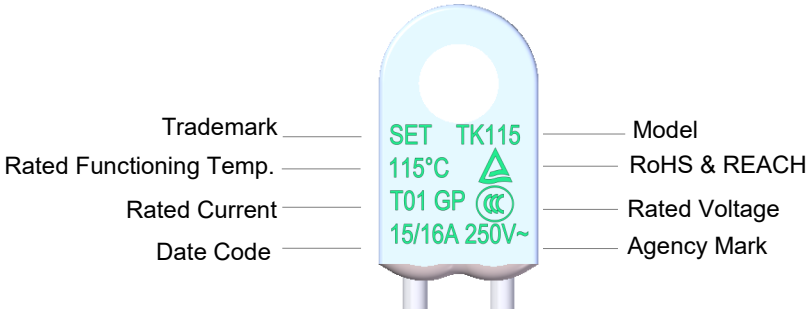

Remark: The Date Code means Year and quarter: A stands for 2000, B stands for 2001 and 01 stands for the first quarter, 02 stands for the second quarter, and so on.

Dimensions (mm)

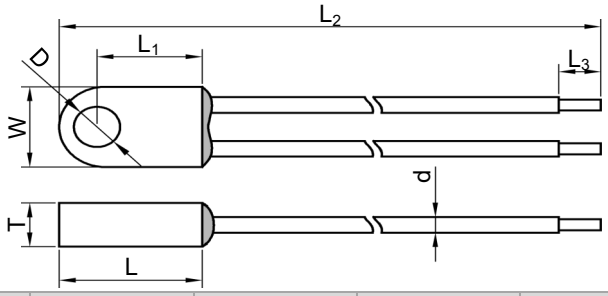

L	L_1	L_2	L_3	W	T	D	d
17.0 ± 1.0	12.5 ± 1.0	78.0 ± 3.0	5.0 ± 1.0	11.0 ± 1.0	6.0 ± 0.5	5.5 ± 1.0	UL1332 18AWG

All Rights Reserved by Xiamen SET Electronics Co., Ltd. 2024-2026 V1.1

Specifications

Rated Functioning Temp. (T_f) °C

	Model	Fusing Temp.	T_h	T_m	I_r	U_r	UL	cUL	TUV	PSE	CCC	RoHS REACH
		(°C)	(°C)	(°C)	(A)	(V)						
221	TK221	218 ± 2	186	250	15 / 16	AC 250	●	●	●	○	●	●
205	TK205	199 ± 3	167	250	15 / 16	AC 250	●	●	●	○	●	●
160	TK160	155 ± 2	130	200	15 / 16	AC 250	○	○	●	●	●	●
150	TK150	145 ± 2	120	200	15 / 16	AC 250	○	○	●	●	●	●
145	TK145	140 ± 2	115	200	15 / 16	AC 250	○	○	●	●	●	●
135	TK135	130 ± 2	105	200	15 / 16	AC 250	○	○	●	●	●	●
130	TK130	125 ± 2	100	200	15 / 16	AC 250	○	○	●	●	●	●
125	TK125	121 ± 2	95	200	15 / 16	AC 250	○	○	●	●	●	●
115	TK115	111 ± 2	85	200	15 / 16	AC 250	○	○	●	●	●	●
102	TK102	98 ± 3	72	200	15 / 16	AC 250	○	○	●	●	●	●

Note:

1: "●"Means certificated, "○"Means non-certificated.

2: RoHS & REACH Compliant .

3: " a ": The temperature measurement point for holding temperature (T_h) shall be positioned 50 mm away from the product body, in accordance with the requirements specified in Appendix H.11.2 of IEC 60691:2015 and Appendix I of GB/T 9816.1-2023.

All Rights Reserved by Xiamen SET Electronics Co., Ltd. 2024-2026 V1.1

Agency Information

Agency Symbol	Standards	The File No. and certification No. obtained by SETsafe | SETfuse
	UL 60691	E214712
	CAN-CSA-E60691	E214712
	EN 60691	R50264747
	J60691	JET2121-32001-2029、JET2121-32001-2030 JET2121-32001-2031、JET2121-32001-2032 JET2121-32001-2033、JET2121-32001-2034
	GB 9816.1	2020980205000182

Soldering

Hand-Soldering

1. Soldering should be carried out according to Table TK-1.
2. The thermal element of ATCO is fusible alloy with low melting point, which is jointed with ATCO lead wires. Improper soldering operation (too high soldering temp. , too long soldering time, too short lead wire etc.) may transfer more heat to the thermal element and ATCO may open in advance.
3. When soldering conditions are more severe than those listed in Table TK-1, a heat sink fixture should be used between soldering point and ATCO body.
4. When soldering, please do not pull / push or twist ATCO body or lead wires.
5. After soldering, let it naturally cool for longer than 20 seconds. During cooling, never move the ATCO body or lead wires.

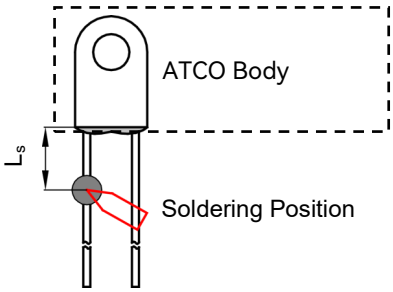

FIGURE TK-1

TABLE TK-1 Hand-Soldering Time

Rated Functioning Temp. (T_f)	Max. Allowable Soldering Time for Different Lead Wire Length (Fig.TK-1)									Max. Soldering Temp.
	L_s Length	Time		L_s Length	Time		L_s Length	Time		
		Tinned Copper Wire	CP Wire		Tinned Copper Wire	CP Wire		Tinned Copper Wire	CP Wire	
(°C)	(mm)	(s)	(s)	(mm)	(s)	(s)	(mm)	(s)	(s)	(°C)
102 to 115	10	1[a]	4	20	2	5	30	3	6	400
116 to 135	10	1[a]	4	20	3	6	30	5	8	
136 to 150	10	3	6	20	5	8	30	5	8	
151 to 230	10	4	7	20	6	9	30	7	10	

Note:
a: Auxiliary Heat Sink Fixture is Required to Avoid ATCO Cutting off Unexpectedly.

All Rights Reserved by Xiamen SET Electronics Co., Ltd. 2024-2026 V1.1

Wave Soldering

The wave soldering parameters as Table TK-2, for reference only, when ATCO is for practice use, you need to do some validation experiments. For example, using X-RAY to see the fusible alloy of ATCO whether damage after wave soldering.

TABLE TK-2 Wave Soldering Parameters Setting

Rated Functioning Temp. (T_f)	Max. Allowable Preheating Temp. When the Length of Lead Wire is Different (Fig.TK-1)				Preheating Time (t_1)	Max. Wave Soldering Temp.	Dwelling Time (t_2)	Cooling Time (t_3)
	L_s Length	Preheating Temp.	L_s Length	Preheating Temp.				
(°C)	(mm)	(°C)	(mm)	(°C)	(s)	(°C)	(s)	(s)
102 to 130	Recommend Hand-Soldering							
131 to 150	20	80	30	90	< 60	≤ 260	≤ 3	≤ 10
151 to 230	20	90	30	100	< 60	≤ 260	≤ 3	≤ 10

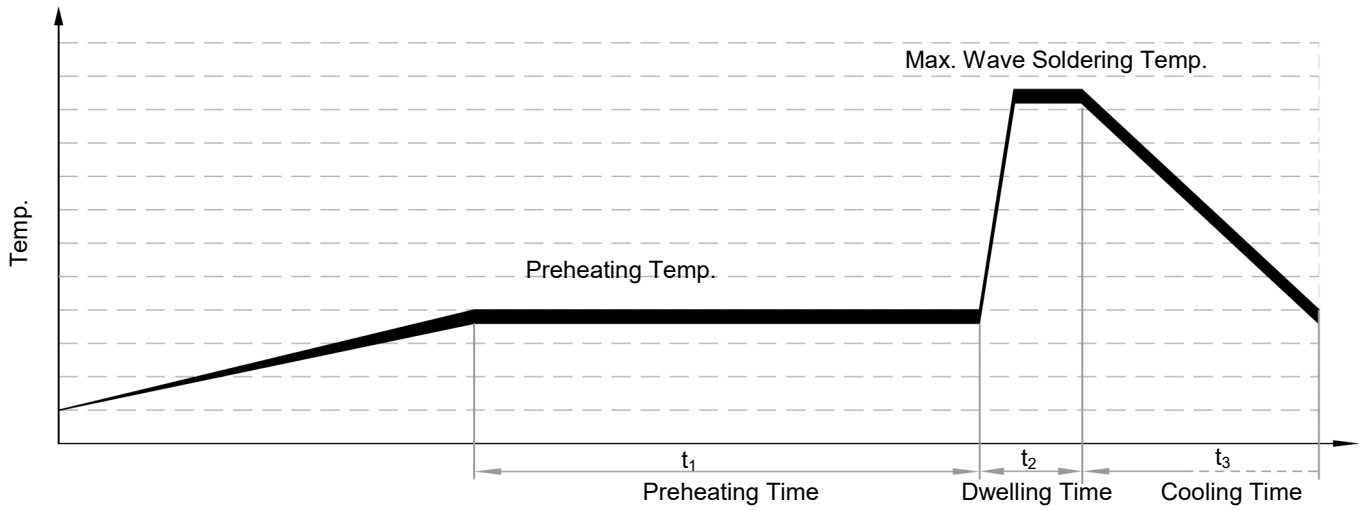

All Rights Reserved by Xiamen SET Electronics Co., Ltd. 2024-2026 V1.1

Product Temp.-Time Curve (Reference)

The Temp.-Time Curve of Thermal-Link in different temp. oil bath.

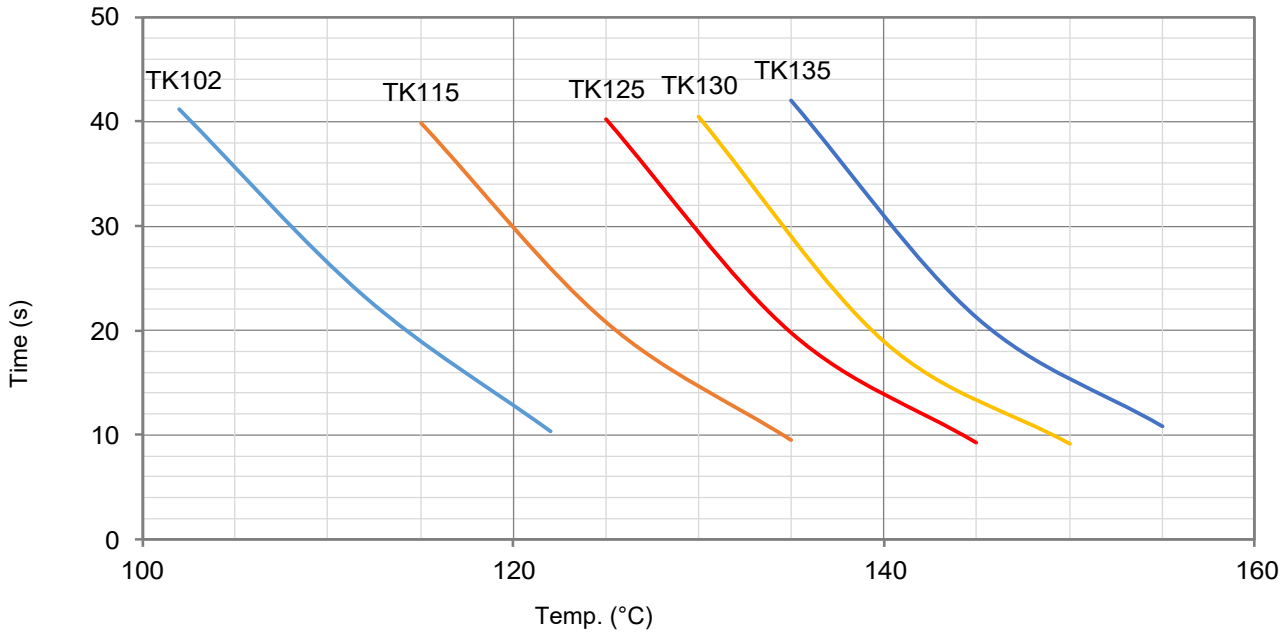

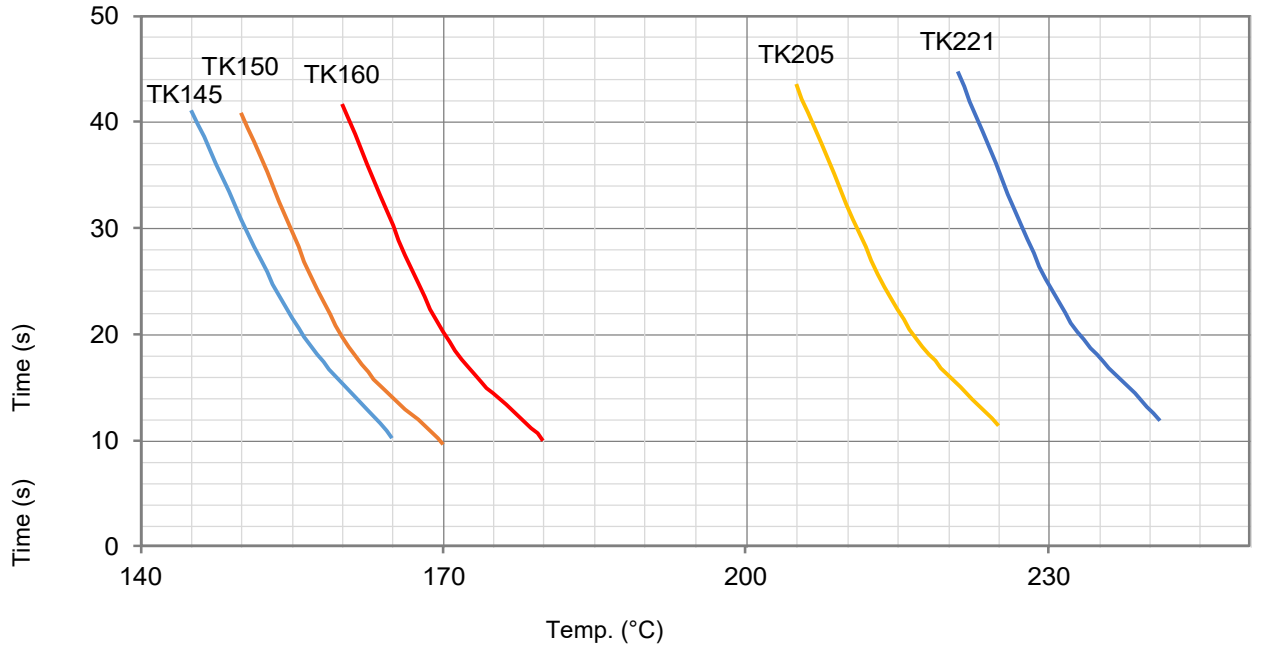

All Rights Reserved by Xiamen SET Electronics Co., Ltd. 2024-2026 V1.1

Product Current-Time Curve (Reference)

The Current-Time Curve shows functioning time at multi-times rated current at room temperature 25 ± 2 °C.

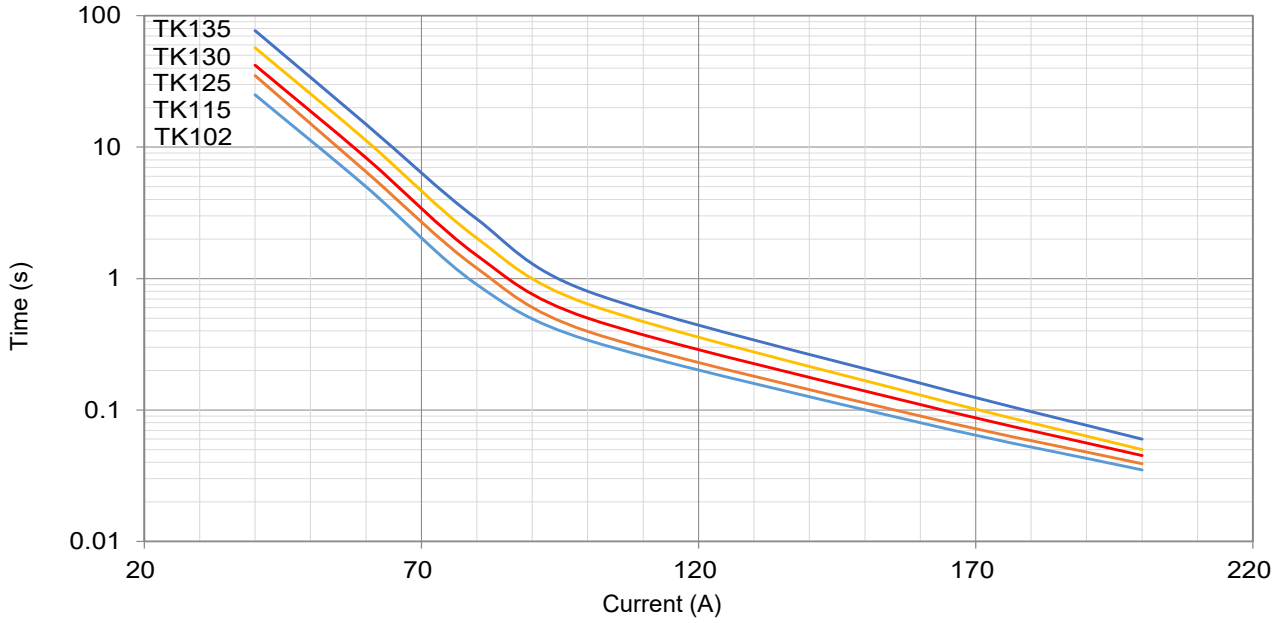

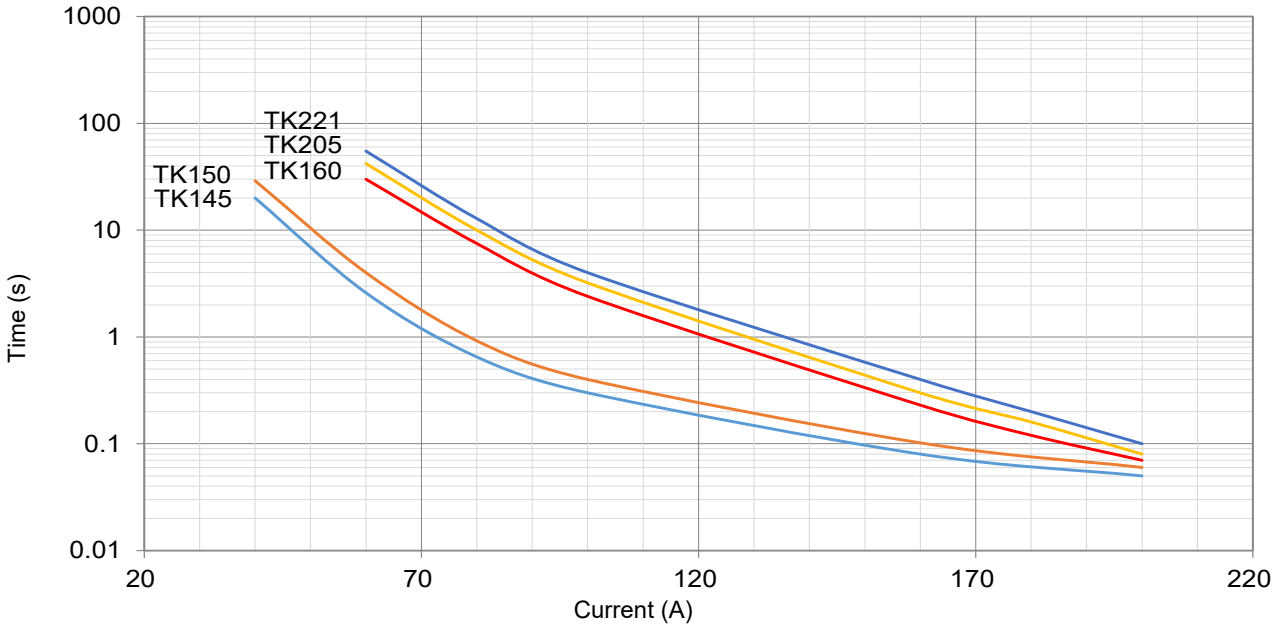

All Rights Reserved by Xiamen SET Electronics Co., Ltd. 2024-2026 V1.1

Packaging Information

Bulk

Item	PE Bag	Carton
Dimensions (mm)	190 × 180	440 × 300 × 260
Quantity (PCS)	50	3000
Gross Weight (kg)		18.0 ± 10%

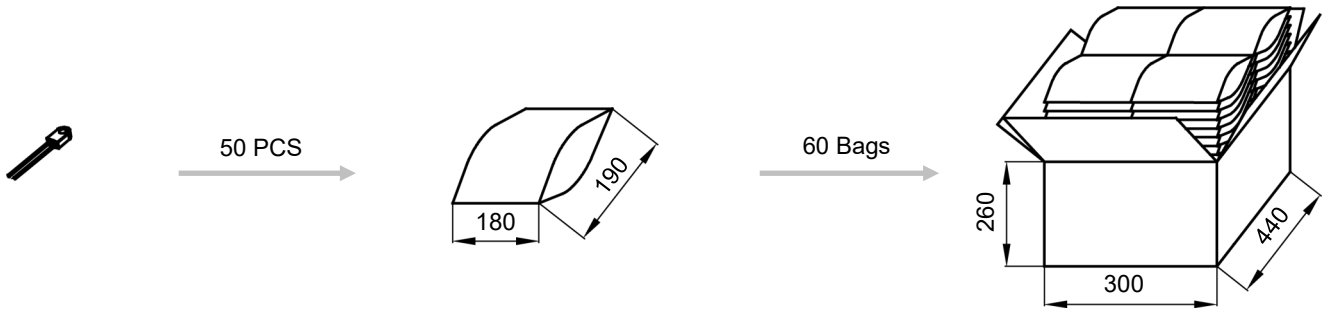

All Rights Reserved by Xiamen SET Electronics Co., Ltd. 2024-2026 V1.1

Part Numbering System

ATCO - TK115 - M T W A B - 001

Other Options

Packing

B	Bulk

Leads Forming

A	Straight Lead

Color of Insulation Tube

W	White
R	Red
K	Black
N	None

Insulation Tube Material

T	Teflon
S	Silicone
N	None

Lead Wire Type

M	Multi stranded tinned copper wire

Rated Functioning Temp.

115	115 °C, See Specifications

Series

TK	Series See Specifications

Product Category

ATCO	Alloy Thermal-Link

All Rights Reserved by Xiamen SET Electronics Co., Ltd. 2024-2026 V1.1

Thermal-Link (ATCO)-Alloy Type

Description

Thermal-Link (ATCO)-Alloy Type is defined as a non-resettable protective device functioning one time only. It is widely used in electrical equipment. ATCO is mainly consist of fusible alloy, flux resin, case, sealant and lead wires. Normally, fusible alloy is jointed to the two lead wires. Under abnormal conditions, when the temp. reaches to the fusing temp. of ATCO, the fusible alloy melts and quickly retracts to the two lead wire ends with the aid of the flux resin and disconnects the circuit completely.

SETsafe | SETfuse Thermal-Link (ATCO)-Alloy Type SY series Rated Functioning Temp. from 95 ℃ to 145 ℃, Rated Current: 10 A, safety certification Includes PSE, CCC, and complies with RoHS and REACH.

Features

- Lead Wires Insulated
- Non-Resettable
- High Accuracy of Functioning Temp.
- RoHS & REACH Compliant

Applications

- Electric Heating Appliances
- Home Electrical Appliances

Customization

- Other Temp.
- The Length of Lead Wires
- Lead Wires can Make Pluggable Terminals

Structure Diagrams

Radial

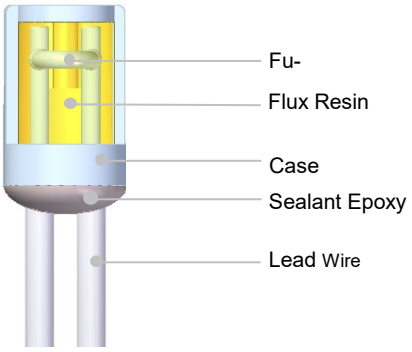

Marking

Radial (Color for reference only)

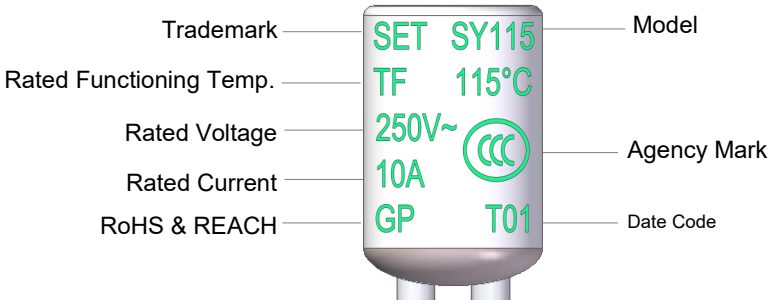

Remark: The Date Code means Year and quarter: A stands for 2000, B stands for 2001 and 01 stands for the first quarter, 02 stands for the second quarter, and so on.

Dimensions

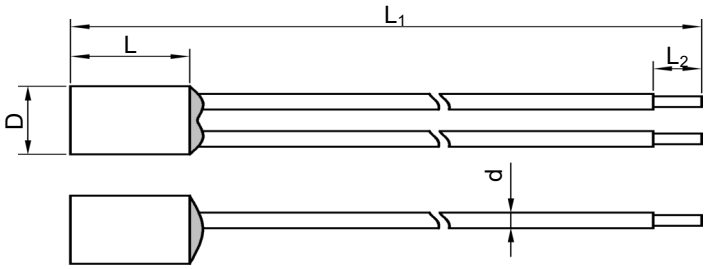

L	L_1	L_2	D	d
13.0 ± 1.0	70.0 ± 3.0	5.0 ± 1.0	9.0 ± 1.0	UL1332 18AWG

All Rights Reserved by Xiamen SET Electronics Co., Ltd. 2024-2026 V1.1

Specifications

Rated Functioning Temp. (T_f) °C	Model	Fusing Temp. (°C)	T_h (°C)	T_m (°C)	I_r (A)	U_r (V)	CCC	PSE	RoHS REACH
145	SY145	140 ± 2	115	180	10	AC 250	●	●	●
130	SY130	125 ± 2	100	180	10	AC 250	●	●	●
125	SY125	121 ± 2	95	180	10	AC 250	●	●	●
120	SY120	115 ± 2	90	180	10	AC 250	●	●	●
115	SY115	111 ± 2	85	180	10	AC 250	●	●	●
105	SY105	100 ± 2	72	180	10	AC 250	●	●	●
95	SY95	91 ± 2	60	180	10	AC 250	●	○	●

Note:

1: "●"Means certificated, "○"Means non-certificated.

2: RoHS & REACH Compliant .

3: " a ": The temperature measurement point for holding temperature (T_h) shall be positioned 50 mm away from the product body, in accordance with the requirements specified in Appendix H.11.2 of IEC 60691:2015 and Appendix I of GB/T 9816.1-2023.

All Rights Reserved by Xiamen SET Electronics Co., Ltd. 2024-2026 V1.1

Agency Information

Agency Symbol	Standards	The File No. and certification No. obtained by SETsafe | SETfuse
PS E	J60691	JET2121-32001-2029、JET2121-32001-2030 JET2121-32001-2031
CCC	GB 9816.1	2020980205000181

Soldering

Hand-Soldering

1. Soldering should be carried out according to Table SY-1.
2. The thermal element of ATCO is fusible alloy with low melting point, which is jointed with ATCO lead wires. Improper soldering operation (too high soldering temp. , too long soldering time, too short lead wire etc.) may transfer more heat to the thermal element and ATCO may open in advance.
3. When soldering conditions are more severe than those listed in Table SY-1, a heat sink fixture should be used between soldering point and ATCO body.
4. When soldering, please do not pull / push or twist ATCO body or lead wires.
5. After soldering, let it naturally cool for longer than 20 seconds. During cooling, never move the ATCO body or lead wires.

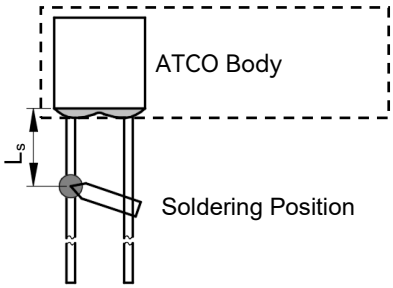

FIGURE SY-1

TABLE SY-1 Hand-Soldering Time

Rated Functioning Temp. (T_f)	Max. Allowable Soldering Time for Different Lead Wire Length (Fig.SY-1)									Max. Soldering Temp.
	L_s Length	Time		L_s Length	Time		L_s Length	Time		
		Tinned Copper Wire	CP Wire		Tinned Copper Wire	CP Wire		Tinned Copper Wire	CP Wire	
(°C)	(mm)	(s)	(s)	(mm)	(s)	(s)	(mm)	(s)	(s)	(°C)
95 to 101	10	1[a]	4	20	2	5	30	3	6	400
102 to 115	10	1[a]	4	20	2	5	30	3	6	
116 to 135	10	1[a]	4	20	3	6	30	5	8	
136 to 145	10	3	6	20	5	8	30	5	8	

Note:
a: Auxiliary Heat Sink Fixture is Required to Avoid ATCO Cutting off Unexpectedly.

All Rights Reserved by Xiamen SET Electronics Co., Ltd. 2024-2026 V1.1

Wave Soldering

The wave soldering parameters as Table SY-2, for reference only, when ATCO is for practice use, you need to do some validation experiments. For example, using X-RAY to see the fusible alloy of ATCO whether damage after wave soldering.

TABLE SY-2 Wave Soldering Parameters Setting

Rated Functioning Temp. (T_f)	Max. Allowable Preheating Temp. When the Length of Lead Wire is Different (Fig.SY-1)				Preheating Time (t_1)	Max. Wave Soldering Temp.	Dwelling Time (t_2)	Cooling Time (t_3)
	L_s Length	Preheating Temp.	L_s Length	Preheating Temp.				
(°C)	(mm)	(°C)	(mm)	(°C)	(s)	(°C)	(s)	(s)
95 to 130	Recommend Hand-Soldering							
131 to 145	20	80	30	90	< 60	≤ 260	≤ 3	≤ 10

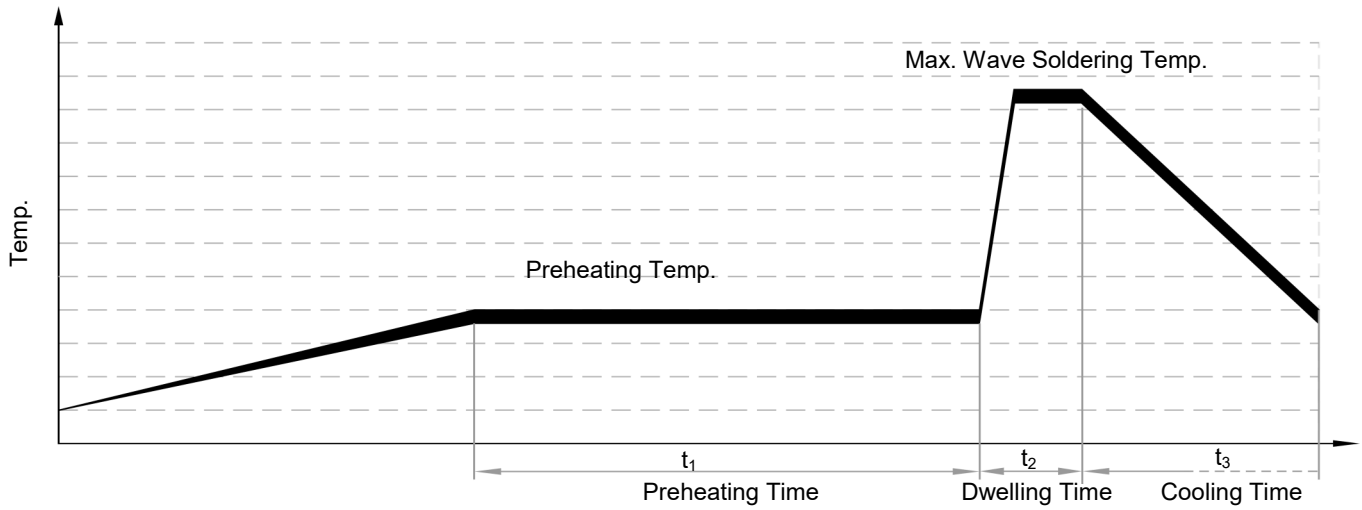

All Rights Reserved by Xiamen SET Electronics Co., Ltd. 2024-2026 V1.1

Product Temp.-Time Curve (Reference)

The Temp.-Time Curve of Thermal-Link in different temp. oil bath.

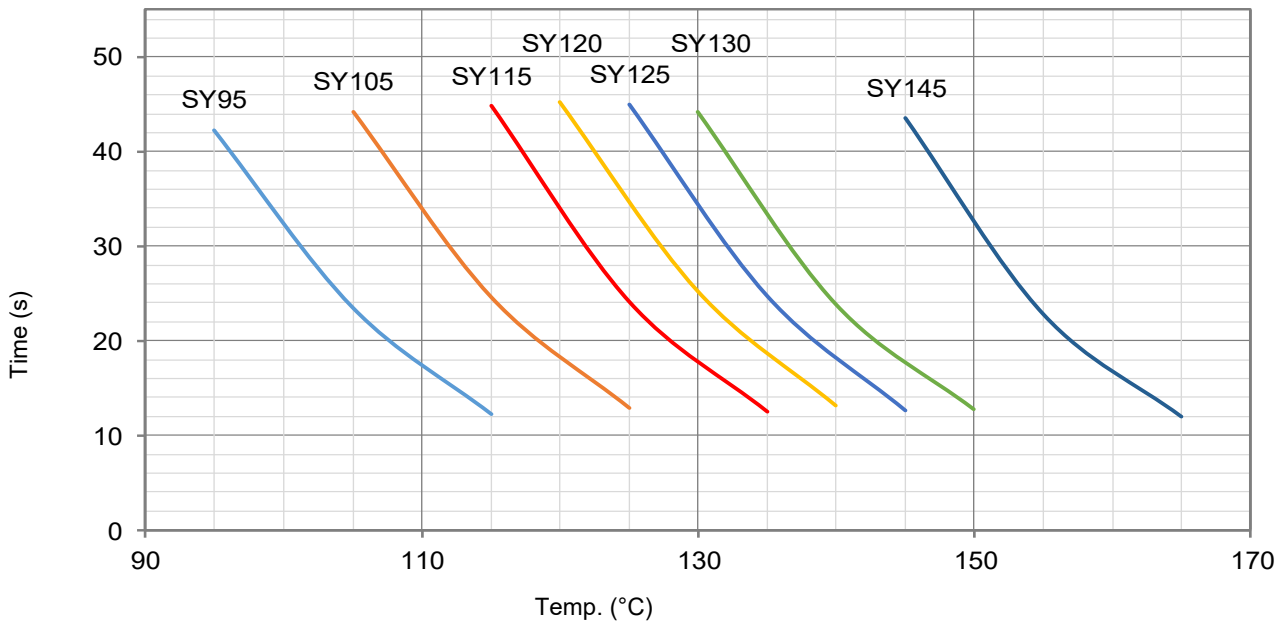

Product Current-Time Curve (Reference)

The Current-Time Curve shows functioning time at multi-times rated current at room temperature 25 ± 2 °C.

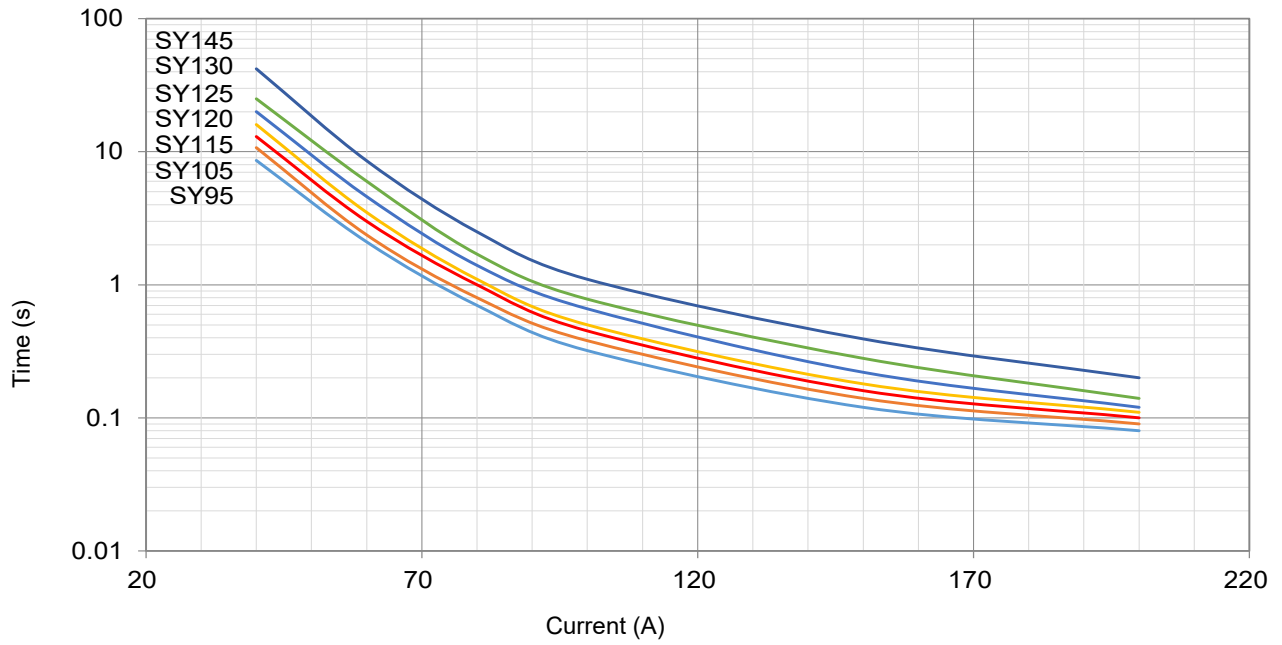

All Rights Reserved by Xiamen SET Electronics Co., Ltd. 2024-2026 V1.1

Packaging Information

Bulk

Item	PE Bag	Carton
Dimensions (mm)	190 × 180	440 × 300 × 260
Quantity (PCS)	50	3000
Gross Weight (kg)		14.0 ± 10%

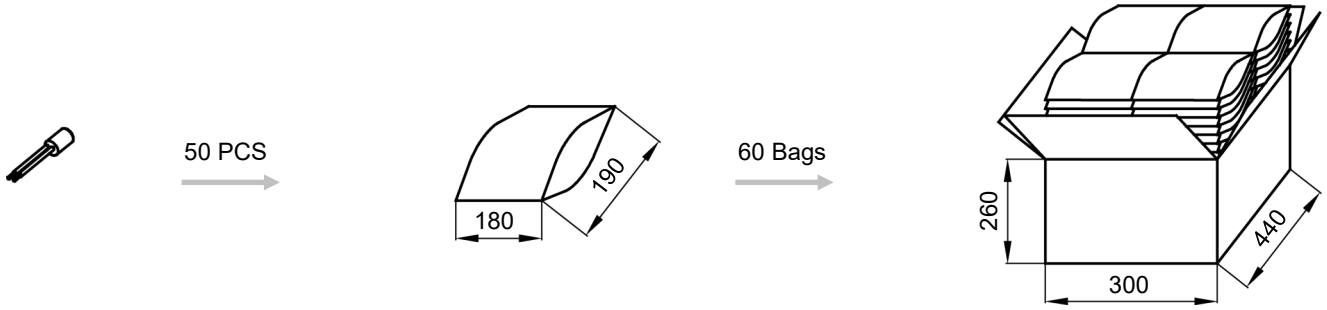

All Rights Reserved by Xiamen SET Electronics Co., Ltd. 2024-2026 V1.1

Part Numbering System

ATCO - SY115 - M T W A B - 001

Other Options

Packing

B	Bulk
T	Taping

Leads Forming

A	Straight Lead

Color of Insulation Tube

W	White
R	Red
K	Black
N	None

Insulation Tube Material

T	Teflon
S	Silicone
N	None

Lead Wire Type

M	Multi stranded tinned copper wire

Rated Functioning Temp.

115	115 °C, See Specifications

Series

SY	Series See Specifications

Product Category

ATCO	Alloy Thermal-Link

All Rights Reserved by Xiamen SET Electronics Co., Ltd. 2024-2026 V1.1

Thermal-Link (ATCO)-Alloy Type

Description

Thermal-Link (ATCO)-Alloy Type is defined as a non-resettable protective device functioning one time only. It is widely used in electrical equipment. ATCO is mainly consist of fusible alloy, flux resin, case, sealant and lead wires. Normally, fusible alloy is jointed to the two lead wires. Under abnormal conditions, when the temp. reaches to the fusing temp. of ATCO, the fusible alloy melts and quickly retracts to the two lead wire ends with the aid of the flux resin and disconnects the circuit completely.

SETsafe | SETfuse Thermal-Link (ATCO)-Alloy Type TY series Rated Functioning Temp. from 95 ℃ to 145 ℃, Rated Current: 15 A, 16 A, safety certification Includes PSE, CCC, and complies with RoHS and REACH.

Features

- Lead Wires Insulated
- Non-Resettable
- High Accuracy of Functioning Temp.
- RoHS & REACH Compliant

Applications

- Electric Heating Appliances
- Home Electrical Appliances

Customization

- Other Temp.
- The Length of Lead Wires
- Lead Wires can Make Pluggable Terminals

Structure Diagrams

Radial

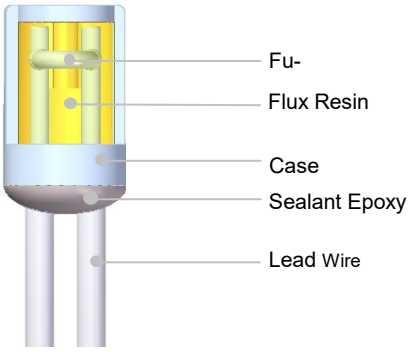

Marking

Radial (Color for reference only)

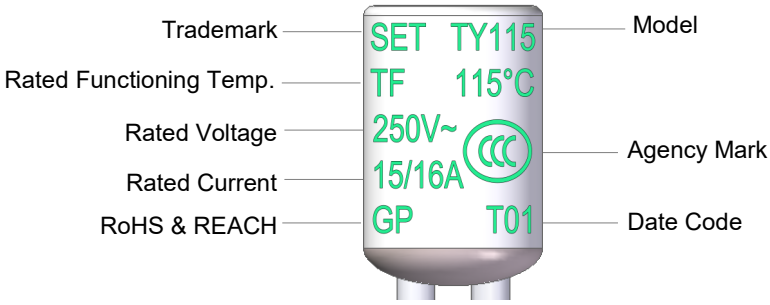

Remark: The Date Code means Year and quarter: A stands for 2000, B stands for 2001 and 01 stands for the first quarter, 02 stands for the second quarter, and so on.

Dimensions

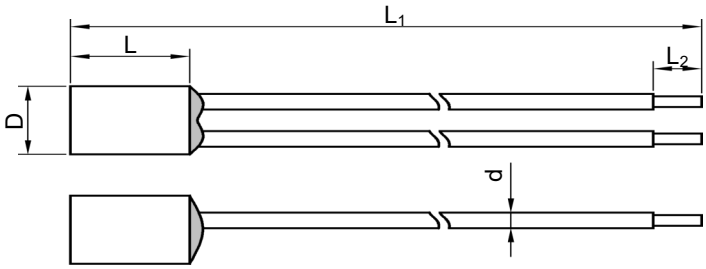

L	L_1	L_2	D	d
13.0 ± 1.0	70.0 ± 3.0	5.0 ± 1.0	9.0 ± 1.0	UL1332 18AWG

All Rights Reserved by Xiamen SET Electronics Co., Ltd. 2024-2026 V1.1

Specifications

Rated Functioning Temp. (T_f) °C	Model	Fusing Temp.	T_h	T_m	I_r	U_r	PSE	CCC	RoHS REACH
		(°C)	(°C)	(°C)	(A)	(V)	PSE	CCC	
145	TY145	140 ± 2	115	180	15/16	AC 250	●	●	●
130	TY130	125 ± 2	100	180	15/16	AC 250	●	●	●
125	TY125	121 ± 2	95	180	15/16	AC 250	●	●	●
120	TY120	115 ± 2	90	180	15/16	AC 250	●	●	●
115	TY115	111 ± 2	85	180	15/16	AC 250	●	●	●
105	TY105	100 ± 2	72	180	15/16	AC 250	●	●	●
95	TY95	91 ± 2	60	180	15/16	AC 250	○	●	●

Note:

1: "●"Means certificated, "○"Means non-certificated.

2: RoHS & REACH Compliant .

3: " a ": The temperature measurement point for holding temperature (T_h) shall be positioned 50 mm away from the product body, in accordance with the requirements specified in Appendix H.11.2 of IEC 60691:2015 and Appendix I of GB/T 9816.1-2023.

All Rights Reserved by Xiamen SET Electronics Co., Ltd. 2024-2026 V1.1

Agency Information

Agency Symbol	Standards	The File No. and certification No. obtained by SETsafe | SETfuse
PS E	J60691	JET2121-32001-2029、JET2121-32001-2030 JET2121-32001-2031、JET2121-32001-2032 JET2121-32001-2033、JET2121-32001-2034
CCC	GB 9816.1	2020980205000181

Soldering

Hand-Soldering

1. Soldering should be carried out according to Table TY-1.
2. The thermal element of ATCO is fusible alloy with low melting point, which is jointed with ATCO lead wires. Improper soldering operation (too high soldering temp. , too long soldering time, too short lead wire etc.) may transfer more heat to the thermal element and ATCO may open in advance.
3. When soldering conditions are more severe than those listed in Table TY-1, a heat sink fixture should be used between soldering point and ATCO body.
4. When soldering, please do not pull / push or twist ATCO body or lead wires.
5. After soldering, let it naturally cool for longer than 20 seconds. During cooling, never move the ATCO body or lead wires.

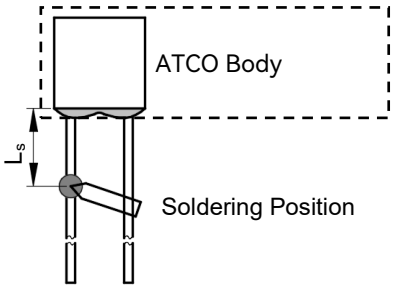

FIGURE TY-1

TABLE TY-1 Hand-Soldering Time

Rated Functioning Temp. (T_f)	Max. Allowable Soldering Time for Different Lead Wire Length (Fig.TY-1)									Max. Soldering Temp.
	L_s Length	Time		L_s Length	Time		L_s Length	Time		
		Tinned Copper Wire	CP Wire		Tinned Copper Wire	CP Wire		Tinned Copper Wire	CP Wire	
(°C)	(mm)	(s)	(s)	(mm)	(s)	(s)	(mm)	(s)	(s)	(°C)
95 to 101	10	1[a]	4	20	2	5	30	3	6	400
102 to 115	10	1[a]	4	20	2	5	30	3	6	
116 to 135	10	1[a]	4	20	3	6	30	5	8	
136 to 145	10	3	6	20	5	8	30	5	8	

Note:
a: Auxiliary Heat Sink Fixture is Required to Avoid ATCO Cutting off Unexpectedly.

All Rights Reserved by Xiamen SET Electronics Co., Ltd. 2024-2026 V1.1

Wave Soldering

The wave soldering parameters as Table TY-2, for reference only, when ATCO is for practice use, you need to do some validation experiments. For example, using X-RAY to see the fusible alloy of ATCO whether damage after wave soldering.

TABLE TY-2 Wave Soldering Parameters Setting

Rated Functioning Temp. (T_f)	Max. Allowable Preheating Temp. When the Length of Lead Wire is Different (Fig.TY-1)				Preheating Time (t_1)	Max. Wave Soldering Temp.	Dwelling Time (t_2)	Cooling Time (t_3)
	L_s Length	Preheating Temp.	L_s Length	Preheating Temp.				
(°C)	(mm)	(°C)	(mm)	(°C)	(s)	(°C)	(s)	(s)
95 to 130	Recommend Hand-Soldering							
131 to 145	20	80	30	90	< 60	≤ 260	≤ 3	≤ 10

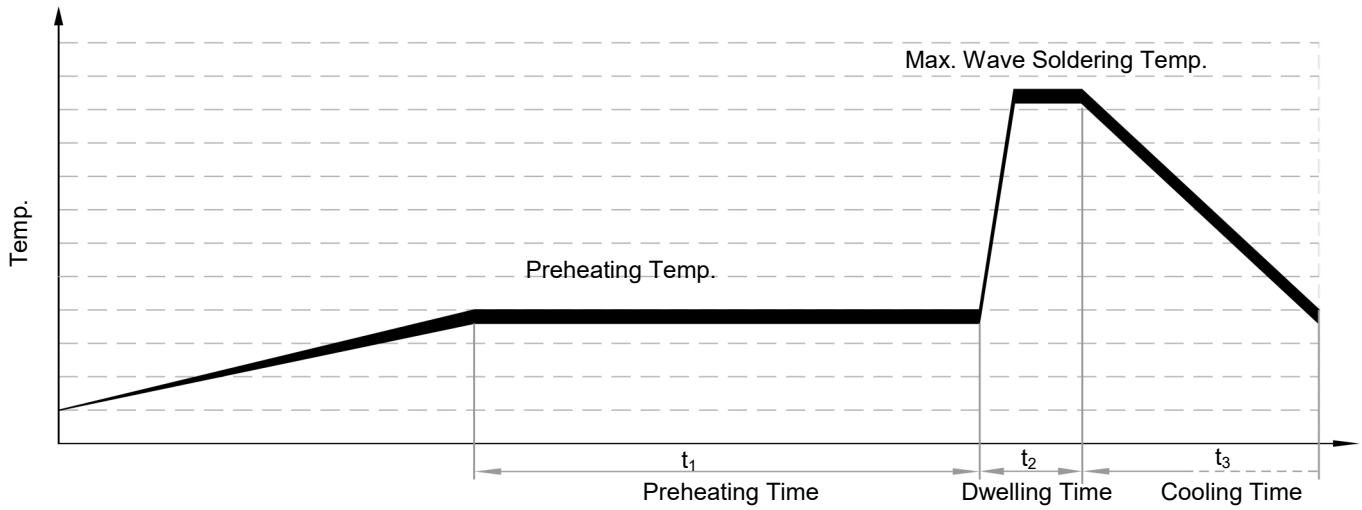

All Rights Reserved by Xiamen SET Electronics Co., Ltd. 2024-2026 V1.1

Product Temp.-Time Curve (Reference)

The Temp.-Time Curve of Thermal-Link in different temp. oil bath.

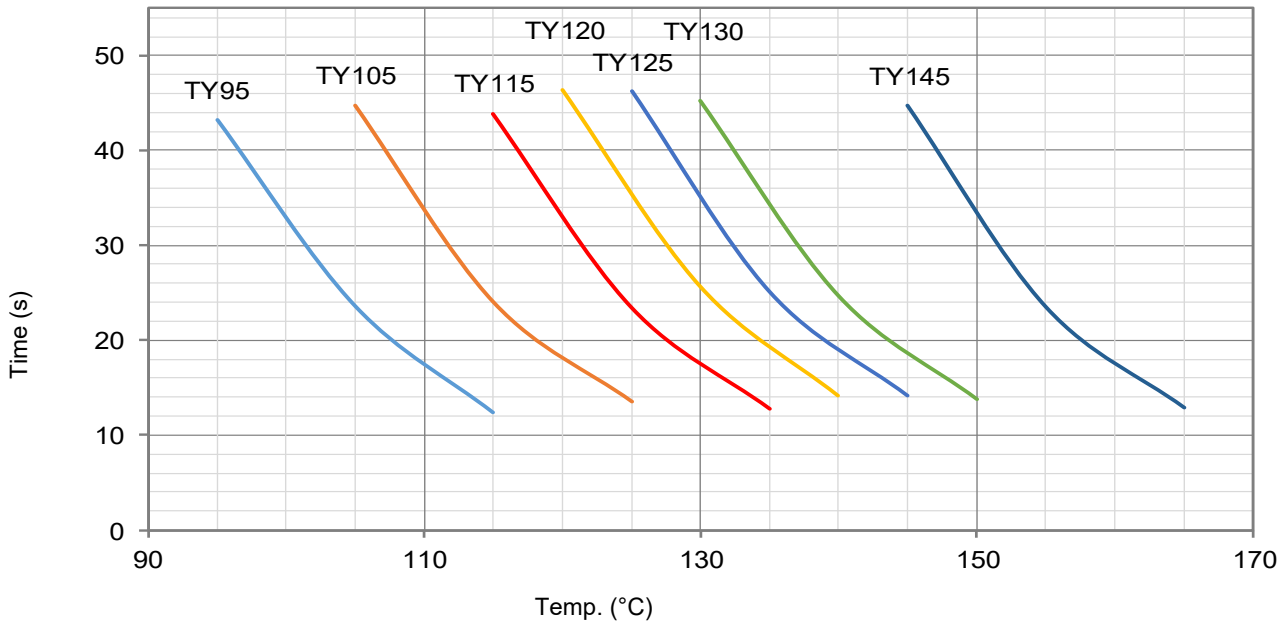

Product Current-Time Curve (Reference)

The Current-Time Curve shows functioning time at multi-times rated current at room temperature 25 ± 2 °C.

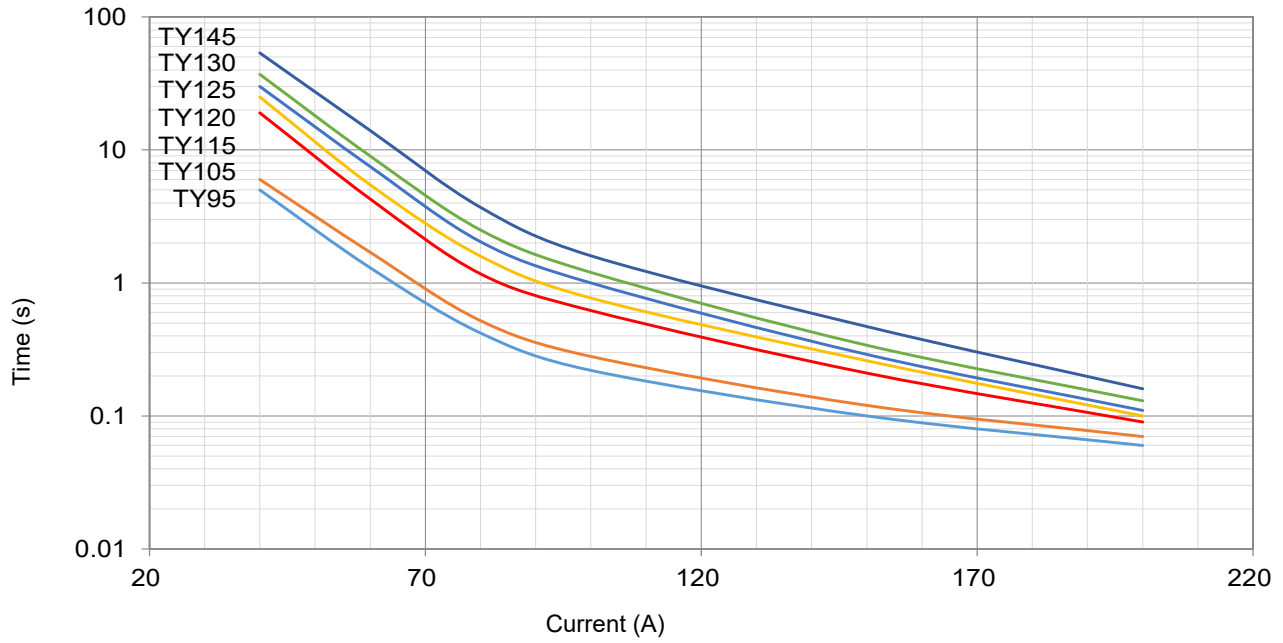

All Rights Reserved by Xiamen SET Electronics Co., Ltd. 2024-2026 V1.1

Packaging Information

Bulk

Item	PE Bag	Carton
Dimensions (mm)	190 × 180	440 × 300 × 260
Quantity (PCS)	50	3000
Gross Weight (kg)		14.0 ± 10%

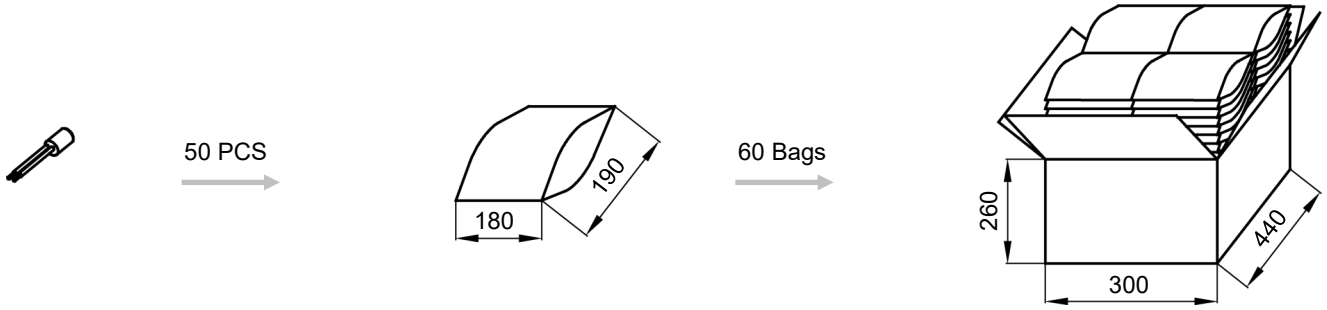

All Rights Reserved by Xiamen SET Electronics Co., Ltd. 2024-2026 V1.1

Part Numbering System

ATCO - TY115 - M T W A B - 001

Other Options

Packing

B	Bulk

Leads Forming

A	Straight Lead

Color of Insulation Tube

W	White
R	Red
K	Black
N	None

Insulation Tube Material

T	Teflon
S	Silicone
N	None

Lead Wire Type

M	Multi stranded tinned copper wire

Rated Functioning Temp.

115	115 °C, See Specifications

Series

TY	Series See Specifications

Product Category

ATCO	Alloy Thermal-Link

All Rights Reserved by Xiamen SET Electronics Co., Ltd. 2024-2026 V1.1

Thermal-Link (ATCO)-Alloy Type

SD Series

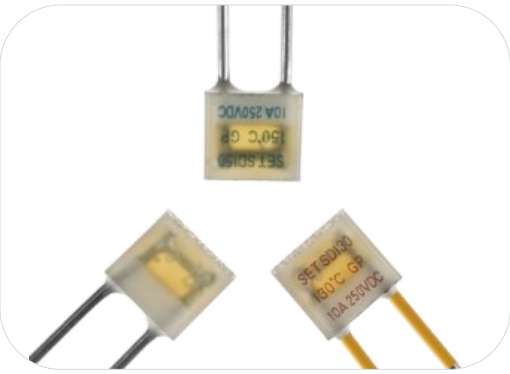

Description

Thermal-Link (ATCO)-Alloy Type is defined as a non-resettable protective device functioning one time only. It is widely used in electrical equipment. ATCO is mainly consist of fusible alloy, flux resin, case, sealant and lead wires. Normally, fusible alloy is jointed to the two lead wires. Under abnormal conditions, when the temp. reaches to the fusing temp. of ATCO, the fusible alloy melts and quickly retracts to the two lead wire ends with the aid of the flux resin and disconnects the circuit completely.

SETsafe | SETfuse Thermal-Link (ATCO)-Alloy Type SD series Rated Functioning Temp. from 102 ℃ to 150 ℃, Rated Current: 10 A, complies with RoHS and REACH.

Features

- Non-Resettable
- High Accuracy of Functioning Temp.
- RoHS & REACH Compliant

Applications

- Surge Protective Devices
- Switched-Mode Power Supplies
- Batteries

Customization

- Other Temp.
- The Length of Lead Wires
- Taping Packing Available
- Lead Wires can be Insulated
- Leads Forming Types

Structure Diagrams

Radial

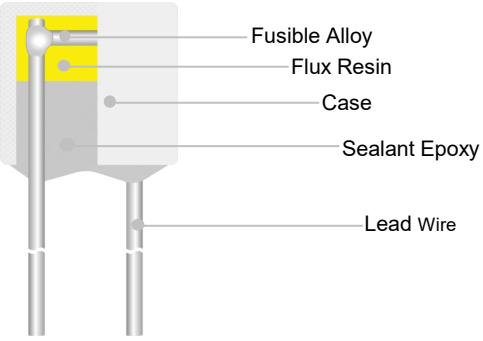

Marking

Radial (Color for reference only)

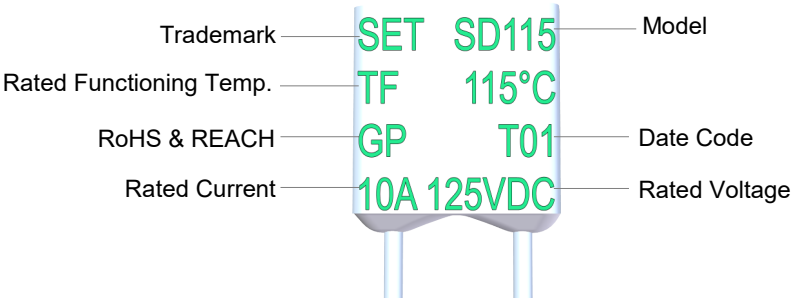

Remark: The Date Code means Year and quarter: A stands for 2000, B stands for 2001 and 01 stands for the first quarter, 02 stands for the second quarter, and so on.

Dimensions (mm)

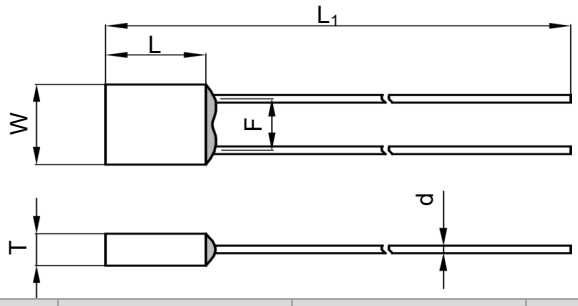

L	L_1	W	T	d	F
7.5 ± 0.5	50.0 ± 2.0	8.6 ± 0.5	3.6 ± 0.2	1.05 ± 0.05	5.2 ± 0.5

All Rights Reserved by Xiamen SET Electronics Co., Ltd. 2024-2026 V1.1

Specifications

Rated Functioning Temp. (T_f) °C	Model	Fusing Temp. (°C)	T_h (°C)	T_m (°C)	I_r (A)	U_r (V)	RoHS REACH
150	SD150	145 ± 2	120	160	10	DC 125	●
136	SD136	131 ± 2	106	160	10	DC 125	●
130	SD130	125 ± 2	100	160	10	DC 125	●
125	SD125	121 ± 2	95	160	10	DC 125	●
115	SD115	111 ± 2	85	160	10	DC 125	●
102	SD102	98 ± 3	72	160	10	DC 125	●

Note:

1: "●"Means certificated, "○"Means non-certificated.

2: RoHS & REACH Compliant .

All Rights Reserved by Xiamen SET Electronics Co., Ltd. 2024-2026 V1.1

Soldering

Hand-Soldering

1. Soldering should be carried out according to Table SD-1.
2. The thermal element of ATCO is fusible alloy with low melting point, which is jointed with ATCO lead wires. Improper soldering operation (too high soldering temp. , too long soldering time, too short lead wire etc.) may transfer more heat to the thermal element and ATCO may open in advance.
3. When soldering conditions are more severe than those listed in Table SD-1, a heat sink fixture should be used between soldering point and ATCO body.
4. When soldering, please do not pull / push or twist ATCO body or lead wires.
5. After soldering, let it naturally cool for longer than 20 seconds. During cooling, never move the ATCO body or lead wires.

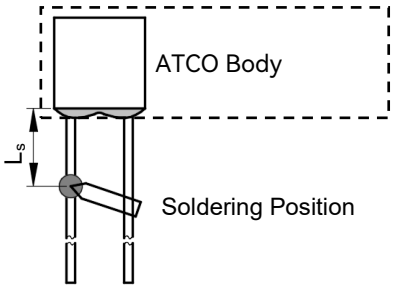

FIGURE SD-1

TABLE SD-1 Hand-Soldering Time

Rated Functioning Temp. (T_f)	Max. Allowable Soldering Time for Different Lead Wire Length (Fig.SD-1)									Max. Soldering Temp.
	L_s Length	Time		L_s Length	Time		L_s Length	Time		
		Tinned Copper Wire	CP Wire		Tinned Copper Wire	CP Wire		Tinned Copper Wire	CP Wire	
(°C)	(mm)	(s)	(s)	(mm)	(s)	(s)	(mm)	(s)	(s)	(°C)
102 to 115	10	1[a]	4	20	2	5	30	3	6	400
116 to 135	10	1[a]	4	20	3	6	30	5	8	
136 to 150	10	3	6	20	5	8	30	5	8	

Note:
a: Auxiliary Heat Sink Fixture is Required to Avoid ATCO Cutting off Unexpectedly.

All Rights Reserved by Xiamen SET Electronics Co., Ltd. 2024-2026 V1.1

Wave Soldering

The wave soldering parameters as Table SD-2, for reference only, when ATCO is for practice use, you need to do some validation experiments. For example, using X-RAY to see the fusible alloy of ATCO whether damage after wave soldering.

TABLE SD-2 Wave Soldering Parameters Setting

Rated Functioning Temp. (T_f)	Max. Allowable Preheating Temp. When the Length of Lead Wire is Different (Fig.SD-1)				Preheating Time (t_1)	Max. Wave Soldering Temp.	Dwelling Time (t_2)	Cooling Time (t_3)
	L_s Length	Preheating Temp.	L_s Length	Preheating Temp.				
(°C)	(mm)	(°C)	(mm)	(°C)	(s)	(°C)	(s)	(s)
102 to 130	Recommend Hand-Soldering							
131 to 150	20	80	30	90	< 60	≤ 260	≤ 3	≤ 10

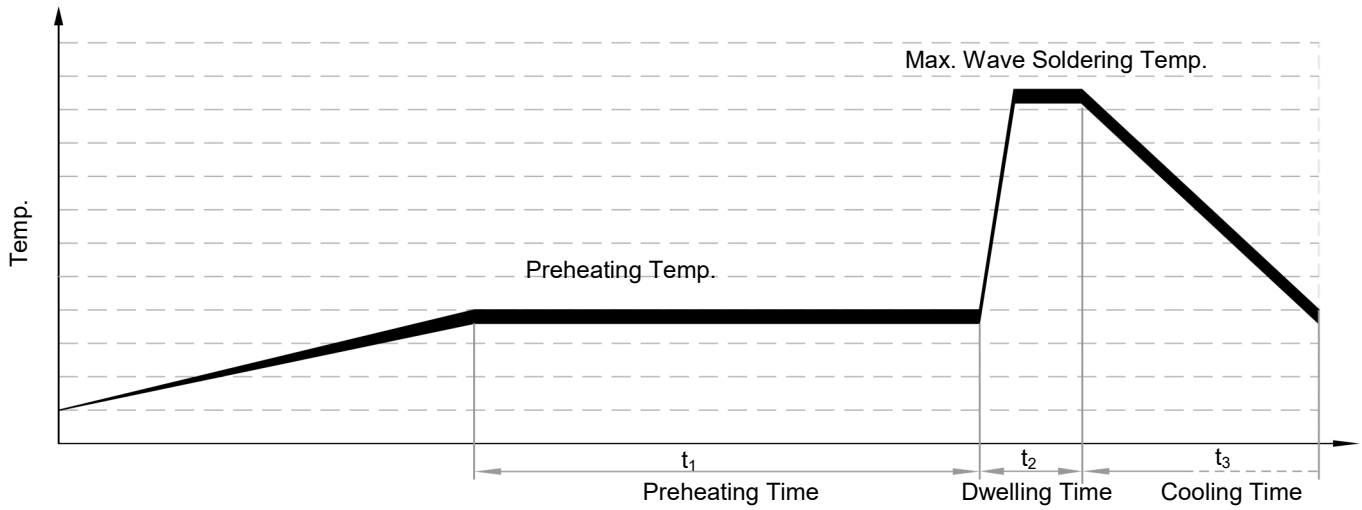

All Rights Reserved by Xiamen SET Electronics Co., Ltd. 2024-2026 V1.1

Product Temp.-Time Curve (Reference)

The Temp.-Time Curve of Thermal-Link in different temp. oil bath.

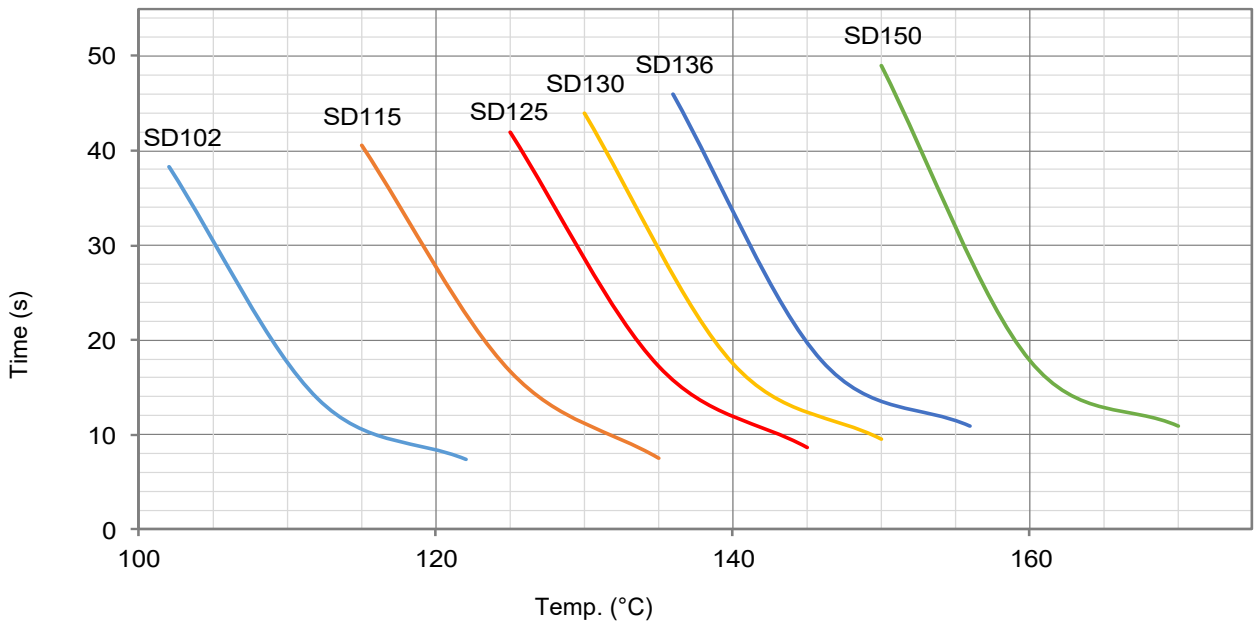

Product Current-Time Curve (Reference)

The Current-Time Curve shows functioning time at multi-times rated current at room temperature 25 ± 2 °C.

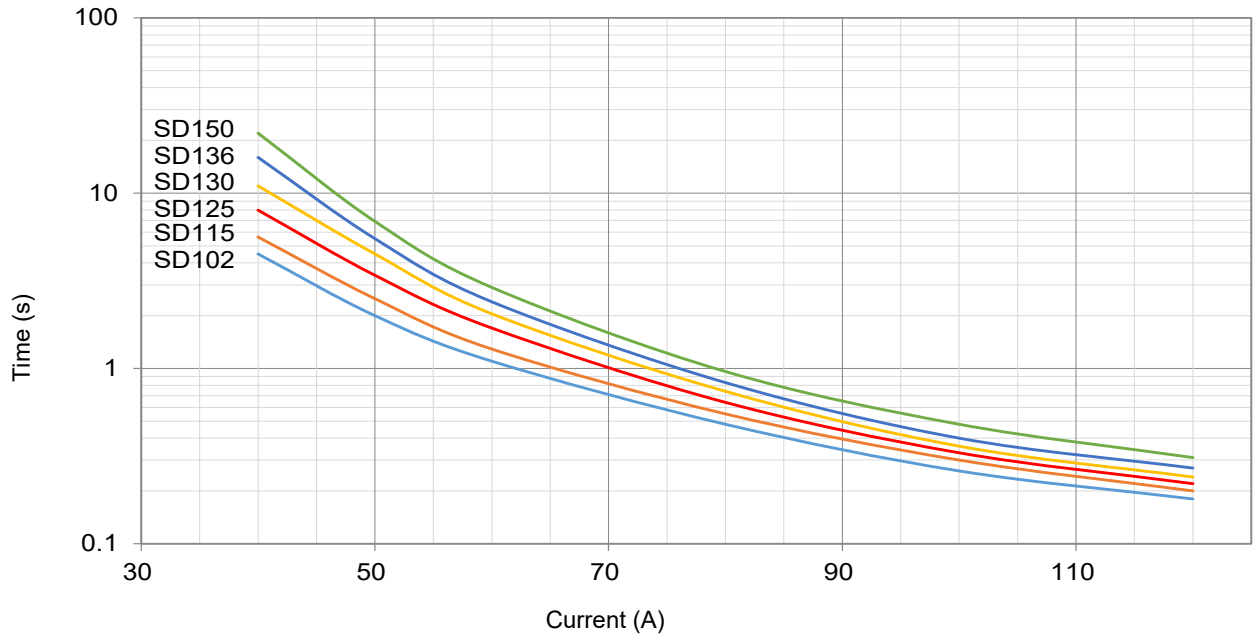

All Rights Reserved by Xiamen SET Electronics Co., Ltd. 2024-2026 V1.1

Packaging Information

Bulk

Item	Box	Carton
Dimensions (mm)	170 × 117 × 50	490 × 365 × 220
Quantity (PCS)	600	19200
Gross Weight (kg)		22.1 ± 10%

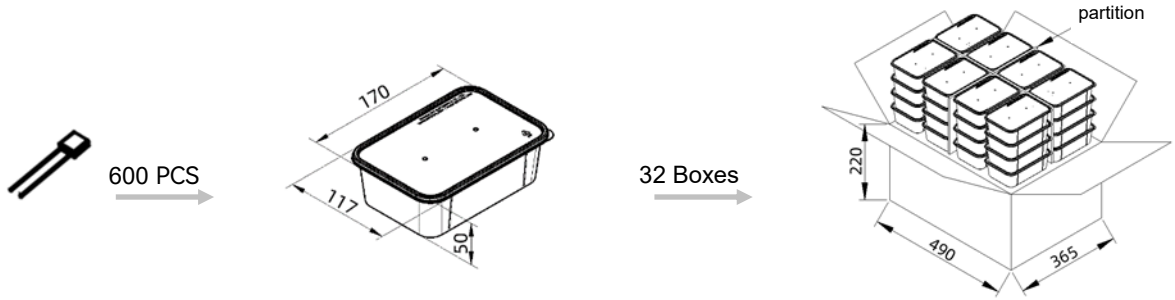

Taping

Item	Box	Carton
Dimensions (mm)	328 × 200 × 70	480 × 340 × 220
Quantity (PCS)	2000	12000
Gross Weight (kg)		14.0 ± 10%

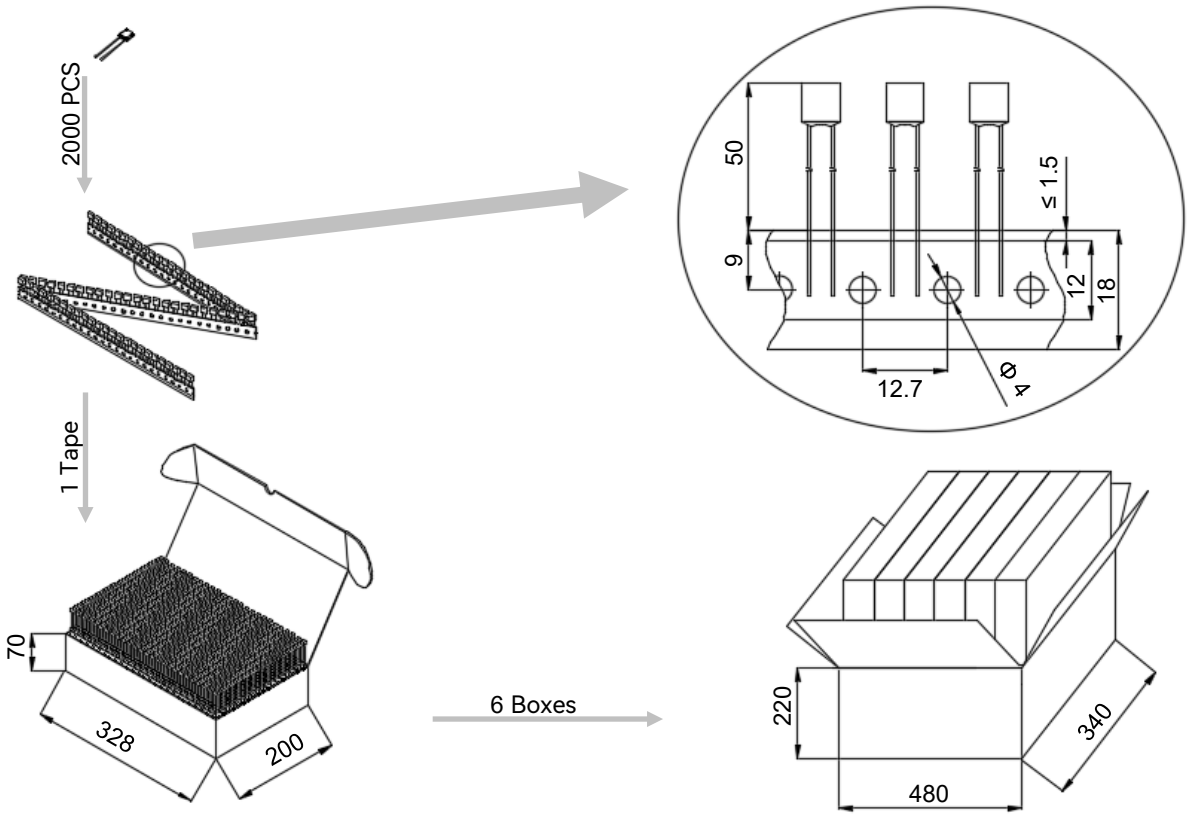

All Rights Reserved by Xiamen SET Electronics Co., Ltd. 2024-2026 V1.1

Part Numbering System

ATCO – SD115 - A N N A B - 001

Other Options

Packing

B	Bulk
T	Taping

Leads Forming

A	Straight Lead
B	Single Lead Bending
C	Leads Bending
D	Leads Kinking
E	Leads Bending and Kinking

Color of Insulation Tube

W	White
Y	Yellow
R	Red
K	Black
N	None

Insulation Tube Material

T	Teflon
P	Polyester
N	None

Lead Wire Type

A	Tinned Copper Wire
B	Tinned Copper Plated Wire

Rated Functioning Temp.

115	115 °C, See Specifications

Series

SD	Series See Specifications

Product Category

ATCO	Alloy Thermal-Link

All Rights Reserved by Xiamen SET Electronics Co., Ltd. 2024-2026 V1.1

Thermal-Link (ATCO)-Alloy Type

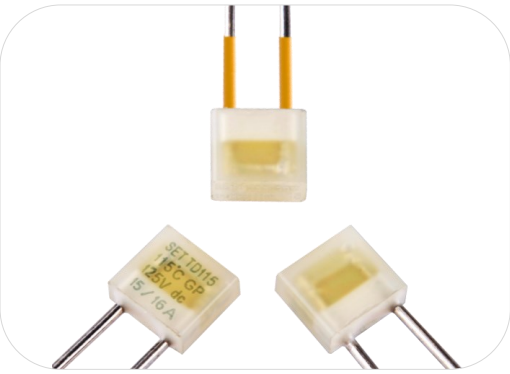

Description

Thermal-Link (ATCO)-Alloy Type is defined as a non-resettable protective device functioning one time only. It is widely used in electrical equipment. ATCO is mainly consist of fusible alloy, flux resin, case, sealant and lead wires. Normally, fusible alloy is jointed to the two lead wires. Under abnormal conditions, when the temp. reaches to the fusing temp. of ATCO, the fusible alloy melts and quickly retracts to the two lead wire ends with the aid of the flux resin and disconnects the circuit completely.

SETsafe | SETfuse Thermal-Link (ATCO)-Alloy Type TD series Rated Functioning Temp. from 102 ℃ to 150 ℃, Rated Current: 15 A,16 A, complies with RoHS and REACH.

Features

- Non-Resettable
- High Accuracy of Functioning Temp.
- RoHS & REACH Compliant

Applications

- Surge Protective Devices
- Switched-Mode Power Supplies
- Batteries

Customization

- Other Temp.
- The Length of Lead Wires
- Taping Packing Available
- Lead Wires can be Insulated
- Leads Forming Types

Structure Diagrams

Radial

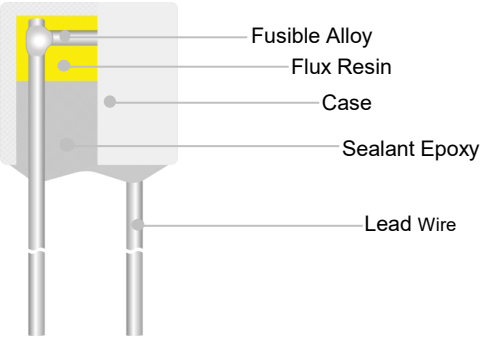

Marking

Radial (Color for reference only)

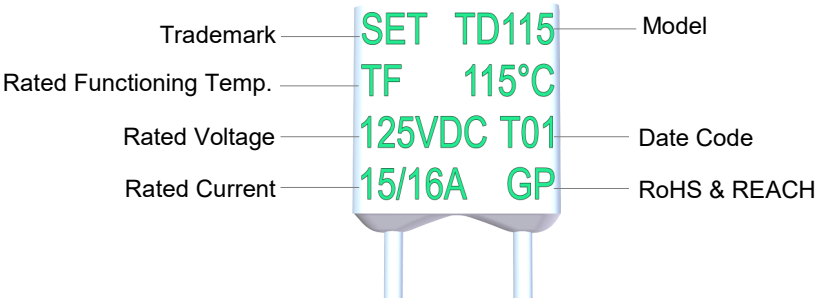

Remark: The Date Code means Year and quarter: A stands for 2000, B stands for 2001 and 01 stands for the first quarter, 02 stands for the second quarter, and so on.

Dimensions (mm)

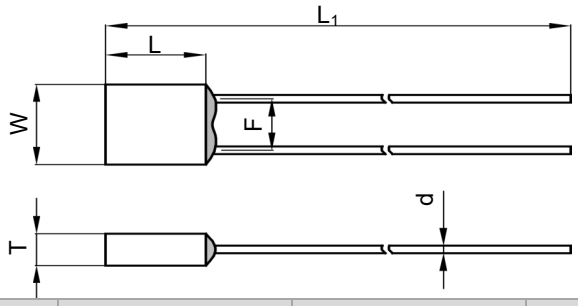

L	L_1	W	T	d	F
7.5 ± 0.5	50.0 ± 2.0	8.6 ± 0.5	3.6 ± 0.2	1.05 ± 0.05	5.2 ± 0.5

All Rights Reserved by Xiamen SET Electronics Co., Ltd. 2024-2026 V1.1

Specifications

Rated Functioning Temp. (T_f) °C	Model	Fusing Temp. (°C)	T_h (°C)	T_m (°C)	I_r (A)	U_r (V)	RoHS REACH
150	TD150	145 ± 2	120	160	15 / 16	DC 125	●
136	TD136	131 ± 2	106	160	15 / 16	DC 125	●
130	TD130	125 ± 2	100	160	15 / 16	DC 125	●
125	TD125	121 ± 2	95	160	15 / 16	DC 125	●
115	TD115	111 ± 2	85	160	15 / 16	DC 125	●
102	TD102	98 ± 3	72	160	15 / 16	DC 125	●

Note:

1: "●"Means certificated, "○"Means non-certificated.

2: RoHS & REACH Compliant .

All Rights Reserved by Xiamen SET Electronics Co., Ltd. 2024-2026 V1.1

Soldering

Hand-Soldering

1. Soldering should be carried out according to Table TD-1.
2. The thermal element of ATCO is fusible alloy with low melting point, which is jointed with ATCO lead wires. Improper soldering operation (too high soldering temp. , too long soldering time, too short lead wire etc.) may transfer more heat to the thermal element and ATCO may open in advance.
3. When soldering conditions are more severe than those listed in Table TD-1, a heat sink fixture should be used between soldering point and ATCO body.
4. When soldering, please do not pull / push or twist ATCO body or lead wires.
5. After soldering, let it naturally cool for longer than 20 seconds. During cooling, never move the ATCO body or lead wires.

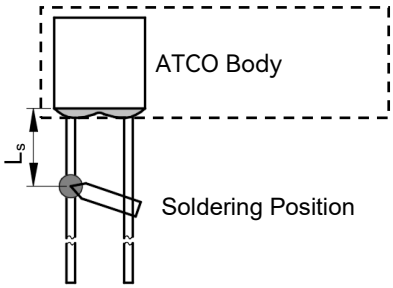

FIGURE TD-1

TABLE TD-1 Hand-Soldering Time

Rated Functioning Temp. (T_f)	Max. Allowable Soldering Time for Different Lead Wire Length (Fig.TD-1)									Max. Soldering Temp.
	L_s Length	Time		L_s Length	Time		L_s Length	Time		
		Tinned Copper Wire	CP Wire		Tinned Copper Wire	CP Wire		Tinned Copper Wire	CP Wire	
(°C)	(mm)	(s)	(s)	(mm)	(s)	(s)	(mm)	(s)	(s)	(°C)
102 to 115	10	1[a]	4	20	2	5	30	3	6	400
116 to 135	10	1[a]	4	20	3	6	30	5	8	
136 to 150	10	3	6	20	5	8	30	5	8	

Note:
a: Auxiliary Heat Sink Fixture is Required to Avoid ATCO Cutting off Unexpectedly.

All Rights Reserved by Xiamen SET Electronics Co., Ltd. 2024-2026 V1.1

Wave Soldering

The wave soldering parameters as Table TD-2, for reference only, when ATCO is for practice use, you need to do some validation experiments. For example, using X-RAY to see the fusible alloy of ATCO whether damage after wave soldering.

TABLE TD-2 Wave Soldering Parameters Setting

Rated Functioning Temp. (T_f)	Max. Allowable Preheating Temp. When the Length of Lead Wire is Different (Fig.TD-1)				Preheating Time (t_1)	Max. Wave Soldering Temp.	Dwelling Time (t_2)	Cooling Time (t_3)
	L_s Length	Preheating Temp.	L_s Length	Preheating Temp.				
(°C)	(mm)	(°C)	(mm)	(°C)	(s)	(°C)	(s)	(s)
102 to 130	Recommend Hand-Soldering							
131 to 150	20	80	30	90	< 60	≤ 260	≤ 3	≤ 10

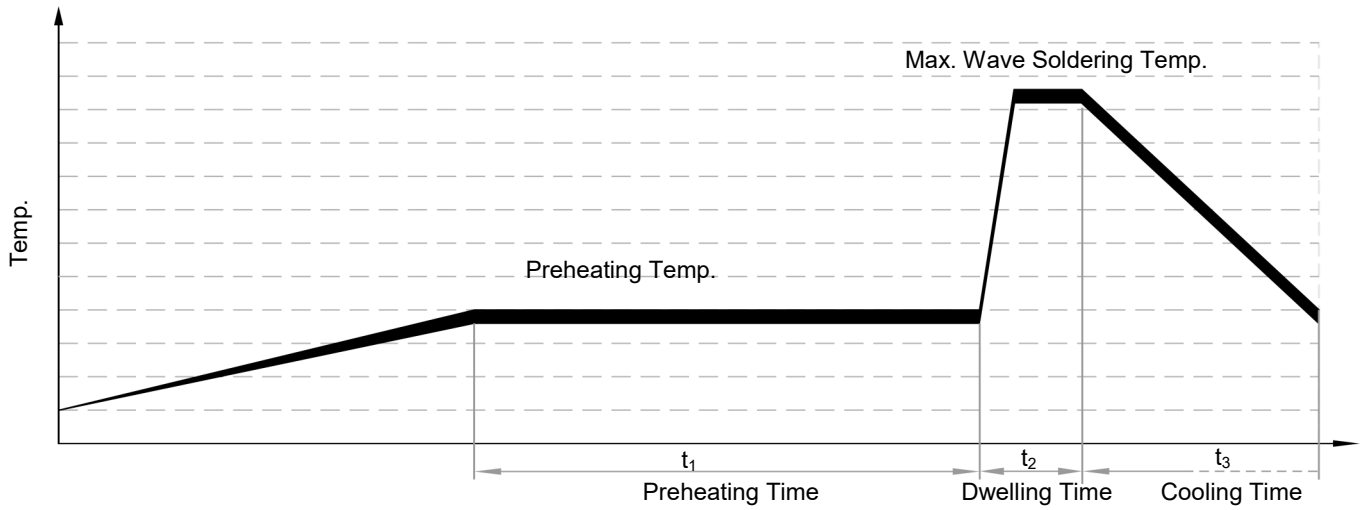

All Rights Reserved by Xiamen SET Electronics Co., Ltd. 2024-2026 V1.1

Product Temp.-Time Curve (Reference)

The Temp.-Time Curve of Thermal-Link in different temp. oil bath.

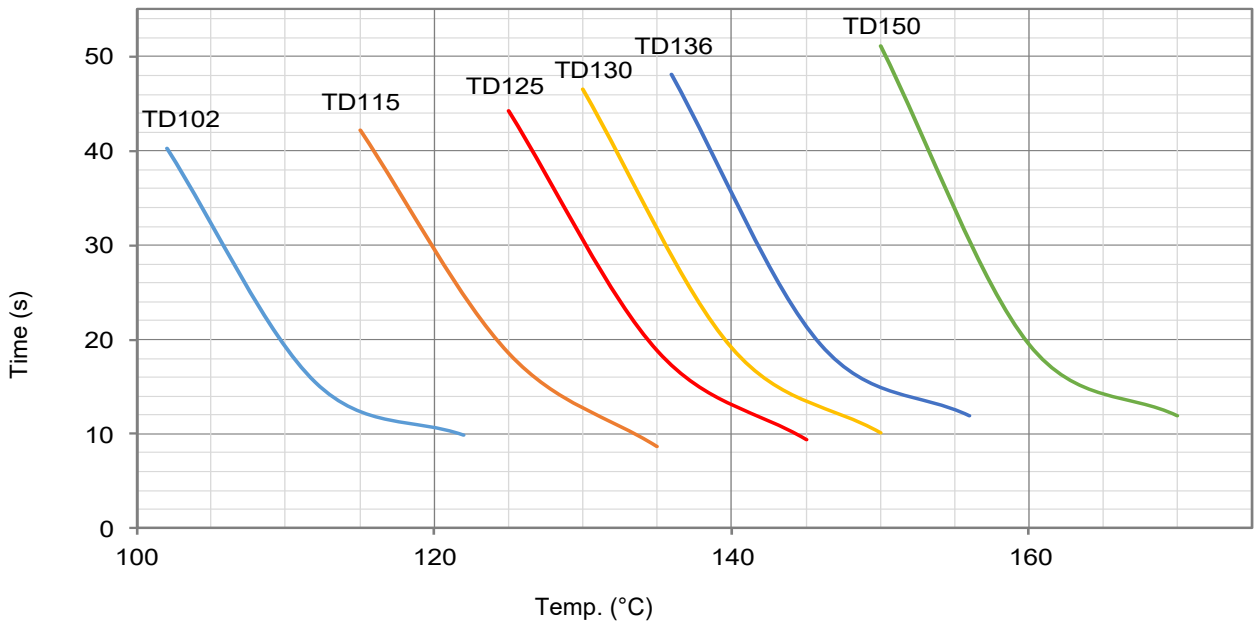

Product Current-Time Curve (Reference)

The Current-Time Curve shows functioning time at multi-times rated current at room temperature 25 ± 2 °C.

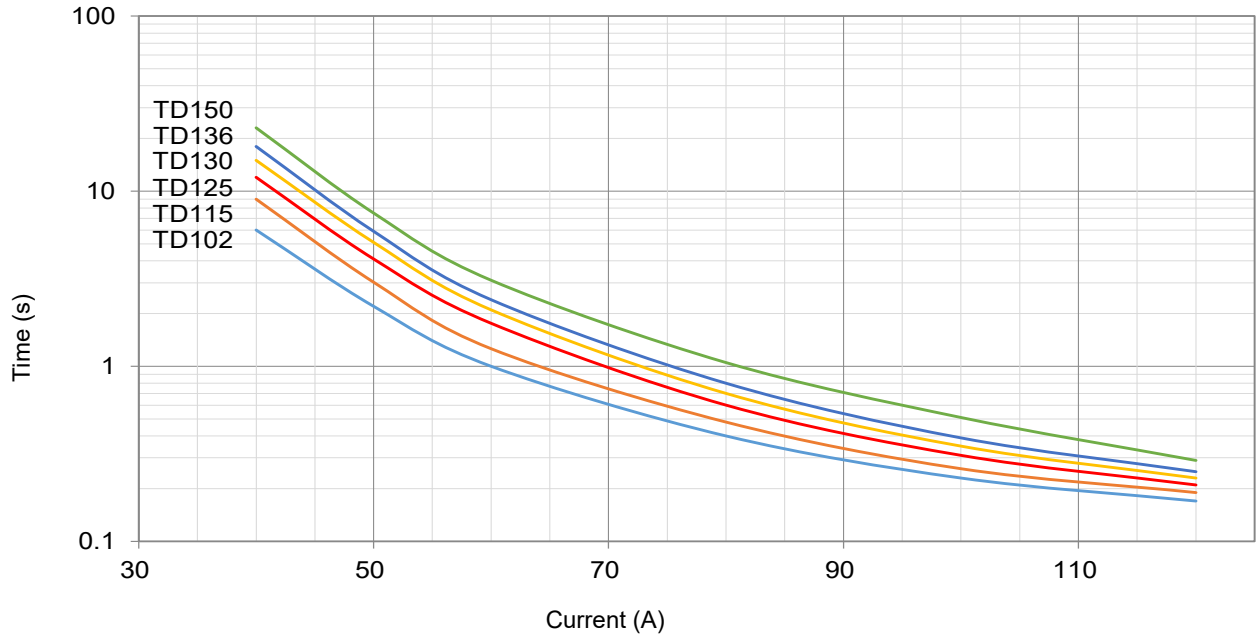

All Rights Reserved by Xiamen SET Electronics Co., Ltd. 2024-2026 V1.1

Packaging Information

Bulk

Item	Box	Carton
Dimensions (mm)	170 × 117 × 50	490 × 365 × 220
Quantity (PCS)	600	19200
Gross Weight (kg)		22.1 ± 10%

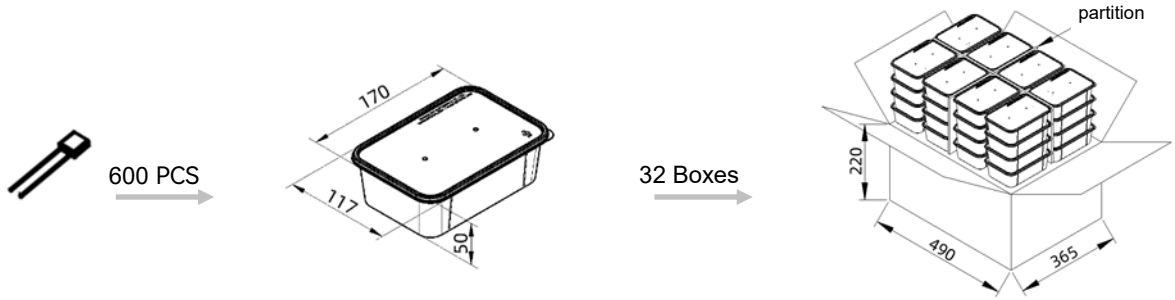

Taping

Item	Box	Carton
Dimensions (mm)	328 × 200 × 70	480 × 340 × 220
Quantity (PCS)	2000	12000
Gross Weight (kg)		14.0 ± 10%

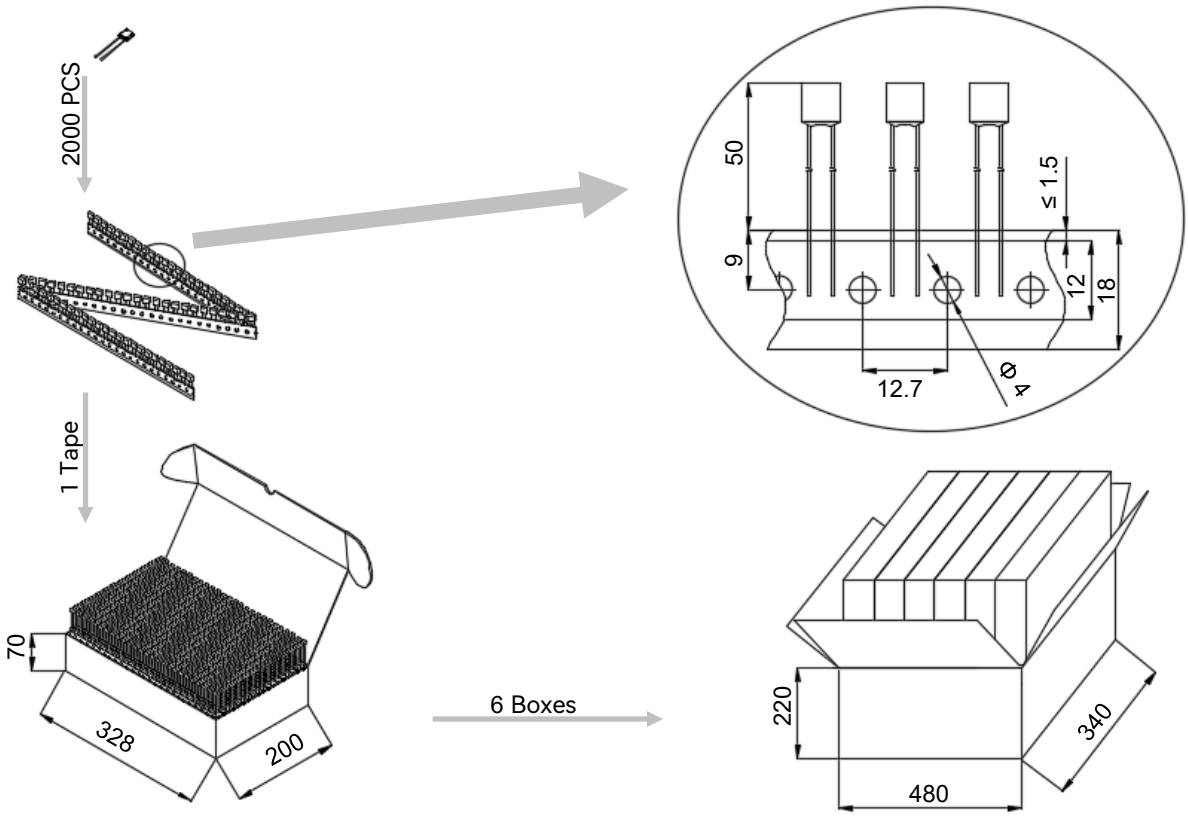

All Rights Reserved by Xiamen SET Electronics Co., Ltd. 2024-2026 V1.1

Part Numbering System

ATCO – TD115 - A N N A B - 001

Other Options

Packing

B	Bulk
T	Taping

Leads Forming

A	Straight Lead
B	Single Lead Bending
C	Leads Bending
D	Leads Kinking
E	Leads Bending and Kinking

Color of Insulation Tube

W	White
Y	Yellow
R	Red
K	Black
N	None

Insulation Tube Material

T	Teflon
P	Polyester
N	None

Lead Wire Type

A	Tinned Copper Wire
B	Tinned Copper Plated Wire

Rated Functioning Temp.

115	115 °C, See Specifications

Series

TD	Series See Specifications

Product Category

ATCO	Alloy Thermal-Link

All Rights Reserved by Xiamen SET Electronics Co., Ltd. 2024-2026 V1.1

Thermal-Link (ATCO)-Alloy Type

PD Series

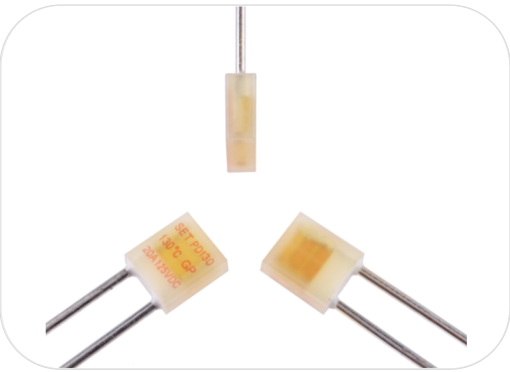

Description

Thermal-Link (ATCO)-Alloy Type is defined as a non-resettable protective device functioning one time only. It is widely used in electrical equipment. ATCO is mainly consist of fusible alloy, flux resin, case, sealant and lead wires. Normally, fusible alloy is jointed to the two lead wires. Under abnormal conditions, when the temp. reaches to the fusing temp. of ATCO, the fusible alloy melts and quickly retracts to the two lead wire ends with the aid of the flux resin and disconnects the circuit completely.

SETsafe | SETfuse Thermal-Link (ATCO)-Alloy Type PD series Rated Functioning Temp. from 102 ℃ to 150 ℃, Rated Current: 20 A, complies with RoHS and REACH.

Features

- Non-Resettable
- High Accuracy of Functioning Temp.
- High Surge Capacity
- RoHS & REACH Compliant

Applications

- Surge Protective Devices
- Switched-Mode Power Supplies
- Batteries

Customization

- Other Temp.
- The Length of Lead Wires
- Leads Forming Types

Structure Diagrams

Radial

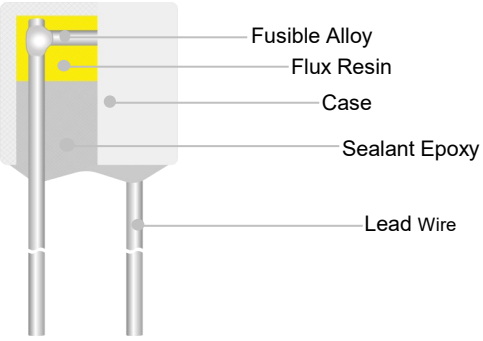

Marking

Radial (Color for reference only)

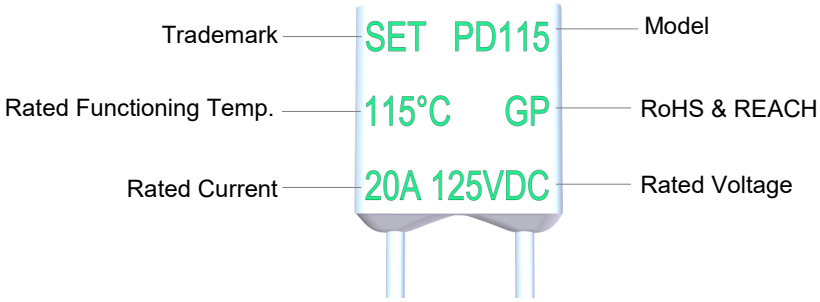

Remark: The Date Code means Year and quarter: A stands for 2000, B stands for 2001 and 01 stands for the first quarter, 02 stands for the second quarter, and so on.

Dimensions (mm)

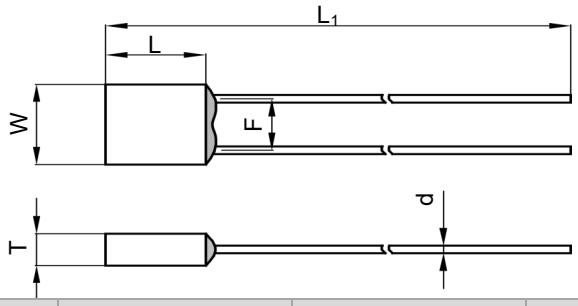

L	L_1	W	T	d	F
11.8 ± 0.5	50.0 ± 2.0	10.7 ± 0.5	4.8 ± 0.2	1.60 ± 0.05	6.6 ± 0.8

All Rights Reserved by Xiamen SET Electronics Co., Ltd. 2024-2026 V1.1

Specifications

Rated Functioning Temp. (T_f) °C	Model	Fusing Temp. (°C)	T_h (°C)	T_m (°C)	I_r (A)	U_r (V)	RoHS REACH
150	PD150	145 ± 2	117	160	20	DC 125	●
136	PD136	131 ± 2	102	160	20	DC 125	●
130	PD130	125 ± 2	97	160	20	DC 125	●
125	PD125	121 ± 2	90	160	20	DC 125	●
115	PD115	111 ± 2	82	160	20	DC 125	●
102	PD102	98 ± 3	66	160	20	DC 125	●

Note:
1: "●"Means certificated, "○"Means non-certificated.
2: RoHS & REACH Compliant .

All Rights Reserved by Xiamen SET Electronics Co., Ltd. 2024-2026 V1.1

Soldering

Hand-Soldering

1. Soldering should be carried out according to Table PD-1.
2. The thermal element of ATCO is fusible alloy with low melting point, which is jointed with ATCO lead wires. Improper soldering operation (too high soldering temp. , too long soldering time, too short lead wire etc.) may transfer more heat to the thermal element and ATCO may open in advance.
3. When soldering conditions are more severe than those listed in Table PD-1, a heat sink fixture should be used between soldering point and ATCO body.
4. When soldering, please do not pull / push or twist ATCO body or lead wires.
5. After soldering, let it naturally cool for longer than 20 seconds. During cooling, never move the ATCO body or lead wires.

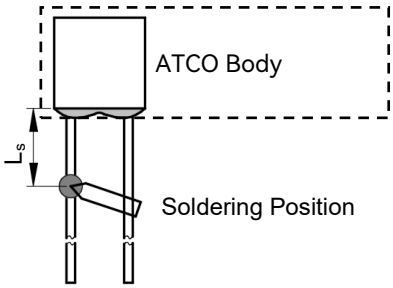

FIGURE PD-1

TABLE PD-1 Hand-Soldering Time

Rated Functioning Temp. (T_f)	Max. Allowable Soldering Time for Different Lead Wire Length (Fig.PD-1)									Max. Soldering Temp.
	L_s Length	Time		L_s Length	Time		L_s Length	Time		
		Tinned Copper Wire	CP Wire		Tinned Copper Wire	CP Wire		Tinned Copper Wire	CP Wire	
(°C)	(mm)	(s)	(s)	(mm)	(s)	(s)	(mm)	(s)	(s)	(°C)
102 to 115	10	1[a]	4	20	2	5	30	3	6	400
116 to 135	10	1[a]	4	20	3	6	30	5	8	
136 to 150	10	3	6	20	5	8	30	5	8	

Note:
a: Auxiliary Heat Sink Fixture is Required to Avoid ATCO Cutting off Unexpectedly.

All Rights Reserved by Xiamen SET Electronics Co., Ltd. 2024-2026 V1.1

Wave Soldering

The wave soldering parameters as Table PD-2, for reference only, when ATCO is for practice use, you need to do some validation experiments. For example, using X-RAY to see the fusible alloy of ATCO whether damage after wave soldering.

TABLE PD-2 Wave Soldering Parameters Setting

Rated Functioning Temp. (T_f)	Max. Allowable Preheating Temp. When the Length of Lead Wire is Different (Fig.PD-1)				Preheating Time (t_1)	Max. Wave Soldering Temp.	Dwelling Time (t_2)	Cooling Time (t_3)
	L_s Length	Preheating Temp.	L_s Length	Preheating Temp.				
(°C)	(mm)	(°C)	(mm)	(°C)	(s)	(°C)	(s)	(s)
102 to 130	Recommend Hand-Soldering							
131 to 150	20	80	30	90	< 60	≤ 260	≤ 3	≤ 10

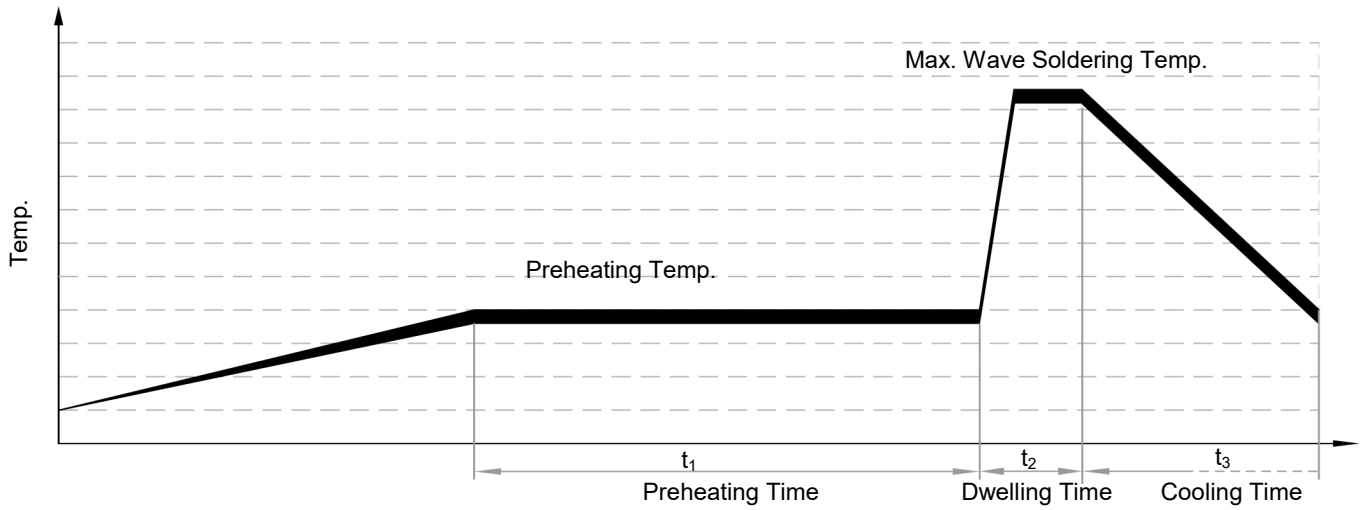

All Rights Reserved by Xiamen SET Electronics Co., Ltd. 2024-2026 V1.1

Product Temp.-Time Curve (Reference)

The Temp.-Time Curve of Thermal-Link in different temp. oil bath.

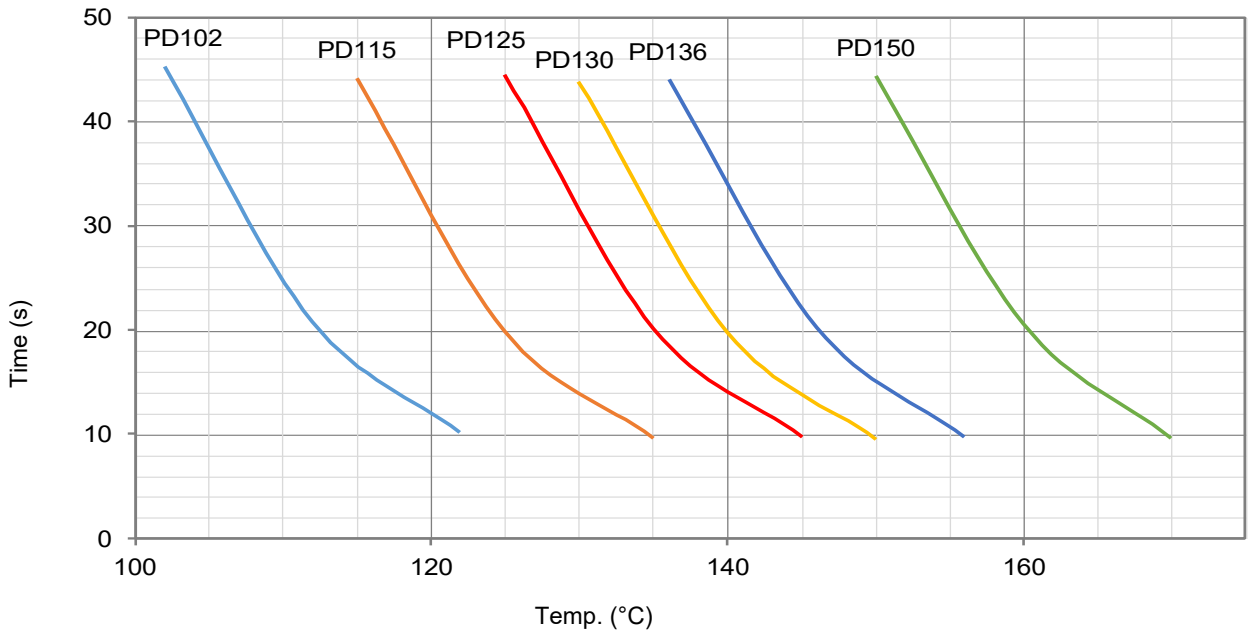

Product Current-Time Curve (Reference)

The Current-Time Curve shows functioning time at multi-times rated current at room temperature 25 ± 2 °C.

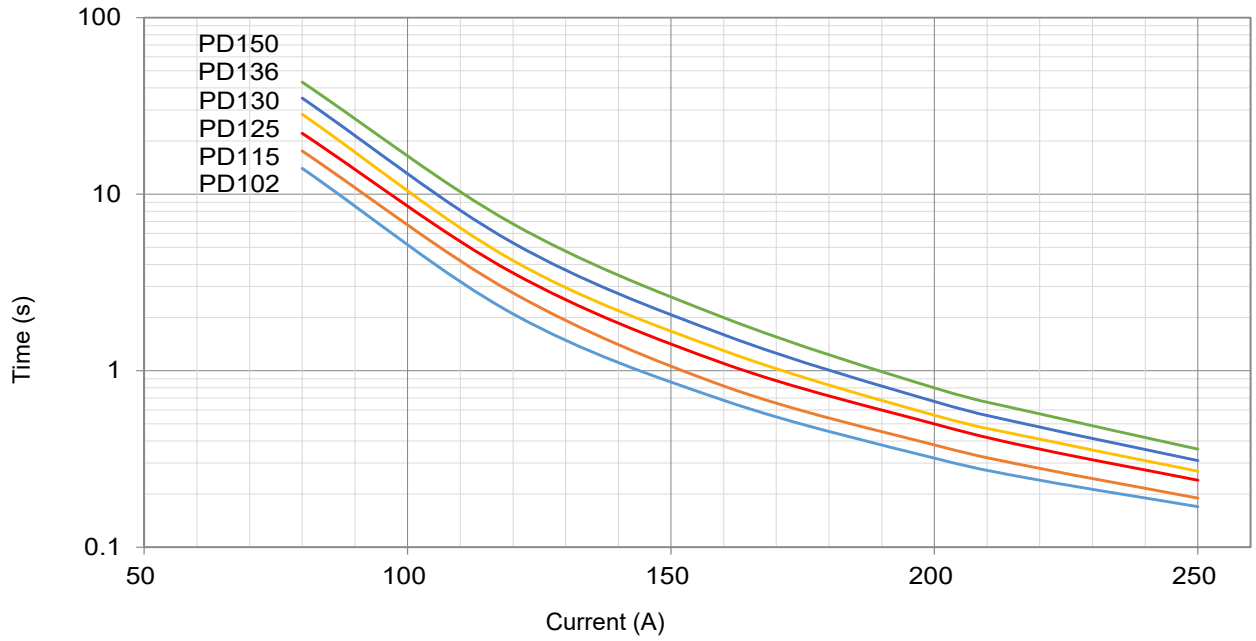

All Rights Reserved by Xiamen SET Electronics Co., Ltd. 2024-2026 V1.1

Packaging Information

Bulk

Item	PE Bag	PE Bag	Carton
Dimensions (mm)	135 × 85	190 × 180	440 × 300 × 260
Quantity (PCS)	30	180	9000
Gross Weight (kg)			23.0 ± 10%

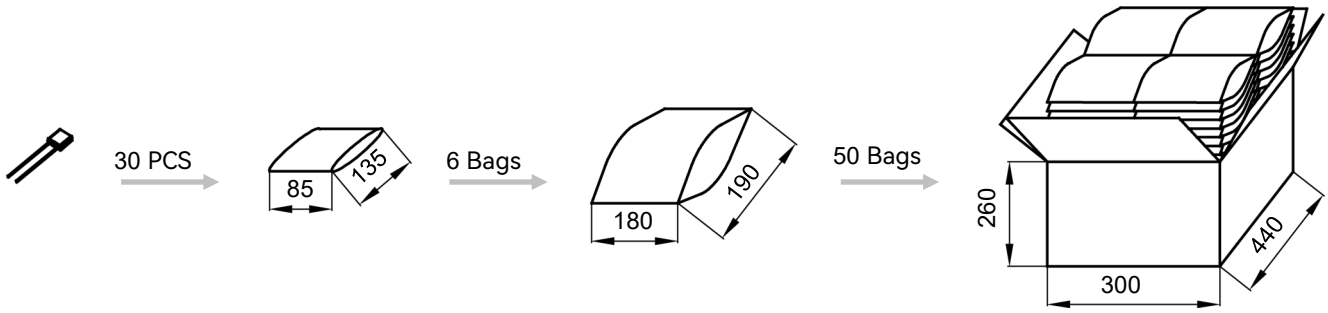

All Rights Reserved by Xiamen SET Electronics Co., Ltd. 2024-2026 V1.1

Part Numbering System

ATCO - PD 115 - A N N A B - 001

Other Options

Packing

B	Bulk
T	Taping

Leads Forming

A	Straight Lead
B	Single Lead Bending
C	Leads Bending
D	Leads Kinking
E	Leads Bending and Kinking

Color of Insulation Tube

N	None

Insulation Tube Material

N	None

Lead Wire Type

A	Tinned Copper Wire

Rated Functioning Temp.

115	115 °C, See Specifications

Series

PD	Series See Specifications

Product Category

ATCO	Alloy Thermal-Link

All Rights Reserved by Xiamen SET Electronics Co., Ltd. 2024-2026 V1.1

Thermal-Link (ATCO)-Alloy Type

QD Series

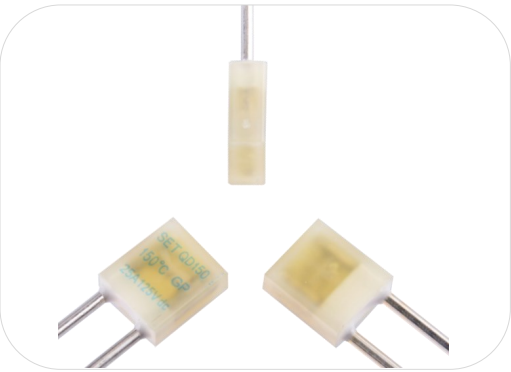

Description

Thermal-Link (ATCO)-Alloy Type is defined as a non-resettable protective device functioning one time only. It is widely used in electrical equipment. ATCO is mainly consist of fusible alloy, flux resin, case, sealant and lead wires. Normally, fusible alloy is jointed to the two lead wires. Under abnormal conditions, when the temp. reaches to the fusing temp. of ATCO, the fusible alloy melts and quickly retracts to the two lead wire ends with the aid of the flux resin and disconnects the circuit completely.

SETsafe | SETfuse Thermal-Link (ATCO)-Alloy Type QD series Rated Functioning Temp. from 102 ℃ to 150 ℃, Rated Current: 25 A, complies with RoHS and REACH.

Features

- Non-Resettable
- High Accuracy of Functioning Temp.
- High Surge Capacity
- RoHS & REACH Compliant

Applications

- Surge Protective Devices
- Switched-Mode Power Supplies
- Batteries

Customization

- Other Temp.
- The Length of Lead Wires
- Leads Forming Types

Structure Diagrams

Radial

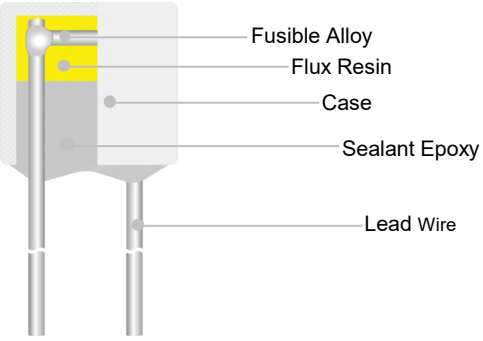

Marking

Radial (Color for reference only)

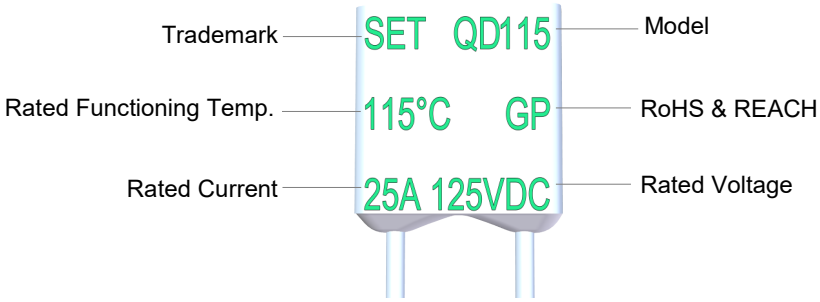

Remark: The Date Code means Year and quarter: A stands for 2000, B stands for 2001 and 01 stands for the first quarter, 02 stands for the second quarter, and so on.

Dimensions (mm)

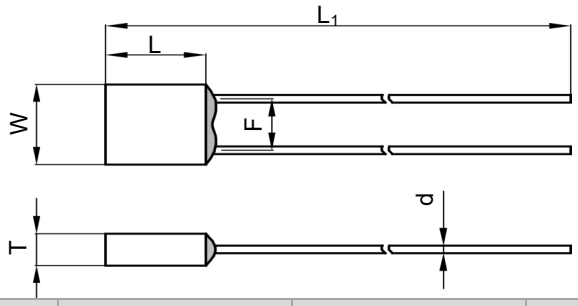

L	L_1	W	T	d	F
11.8 ± 0.5	50.0 ± 2.0	10.7 ± 0.5	4.8 ± 0.2	1.60 ± 0.05	6.6 ± 0.8

All Rights Reserved by Xiamen SET Electronics Co., Ltd. 2024-2026 V1.1

Specifications

Rated Functioning Temp. (T_f) °C	Model	Fusing Temp. (°C)	T_h (°C)	T_m (°C)	I_r (A)	U_r (V)	RoHS REACH
150	QD150	145 ± 2	117	160	25	DC 125	●
136	QD136	131 ± 2	102	160	25	DC 125	●
130	QD130	125 ± 2	97	160	25	DC 125	●
125	QD125	121 ± 2	90	160	25	DC 125	●
115	QD115	111 ± 2	82	160	25	DC 125	●
102	QD102	98 ± 3	66	160	25	DC 125	●

Note:
1: "●"Means certificated, "○"Means non-certificated.
2: RoHS & REACH Compliant .

All Rights Reserved by Xiamen SET Electronics Co., Ltd. 2024-2026 V1.1

Soldering

Hand-Soldering

1. Soldering should be carried out according to Table QD-1.
2. The thermal element of ATCO is fusible alloy with low melting point, which is jointed with ATCO lead wires. Improper soldering operation (too high soldering temp. , too long soldering time, too short lead wire etc.) may transfer more heat to the thermal element and ATCO may open in advance.
3. When soldering conditions are more severe than those listed in Table QD-1, a heat sink fixture should be used between soldering point and ATCO body.
4. When soldering, please do not pull / push or twist ATCO body or lead wires.
5. After soldering, let it naturally cool for longer than 20 seconds. During cooling, never move the ATCO body or lead wires.

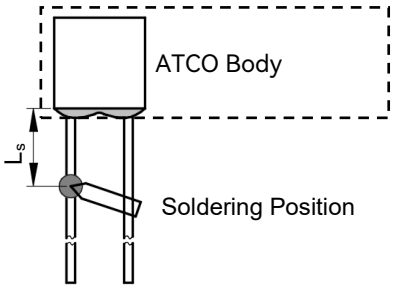

FIGURE QD-1

TABLE QD-1 Hand-Soldering Time

Rated Functioning Temp. (T_f)	Max. Allowable Soldering Time for Different Lead Wire Length (Fig.QD-1)									Max. Soldering Temp.
	L_s Length	Time		L_s Length	Time		L_s Length	Time		
		Tinned Copper Wire	CP Wire		Tinned Copper Wire	CP Wire		Tinned Copper Wire	CP Wire	
(°C)	(mm)	(s)	(s)	(mm)	(s)	(s)	(mm)	(s)	(s)	(°C)
102 to 115	10	1[a]	4	20	2	5	30	3	6	400
116 to 135	10	1[a]	4	20	3	6	30	5	8	
136 to 150	10	3	6	20	5	8	30	5	8	

Note:
a: Auxiliary Heat Sink Fixture is Required to Avoid ATCO Cutting off Unexpectedly.

All Rights Reserved by Xiamen SET Electronics Co., Ltd. 2024-2026 V1.1

Wave Soldering

The wave soldering parameters as Table QD-2, for reference only, when ATCO is for practice use, you need to do some validation experiments. For example, using X-RAY to see the fusible alloy of ATCO whether damage after wave soldering.

TABLE QD-2 Wave Soldering Parameters Setting

Rated Functioning Temp. (T_f)	Max. Allowable Preheating Temp. When the Length of Lead Wire is Different (Fig.QD-1)				Preheating Time (t_1)	Max. Wave Soldering Temp.	Dwelling Time (t_2)	Cooling Time (t_3)
	L_s Length	Preheating Temp.	L_s Length	Preheating Temp.				
(°C)	(mm)	(°C)	(mm)	(°C)	(s)	(°C)	(s)	(s)
102 to 130	Recommend Hand-Soldering							
131 to 150	20	80	30	90	< 60	≤ 260	≤ 3	≤ 10

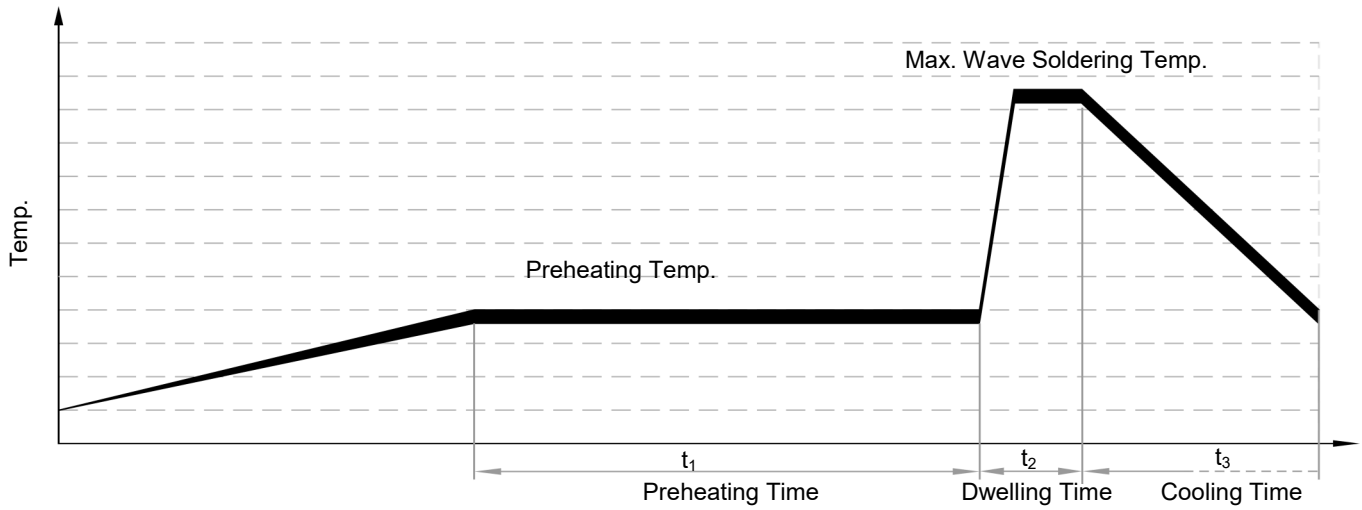

All Rights Reserved by Xiamen SET Electronics Co., Ltd. 2024-2026 V1.1

Product Temp.-Time Curve (Reference)

The Temp.-Time Curve of Thermal-Link in different temp. oil bath.

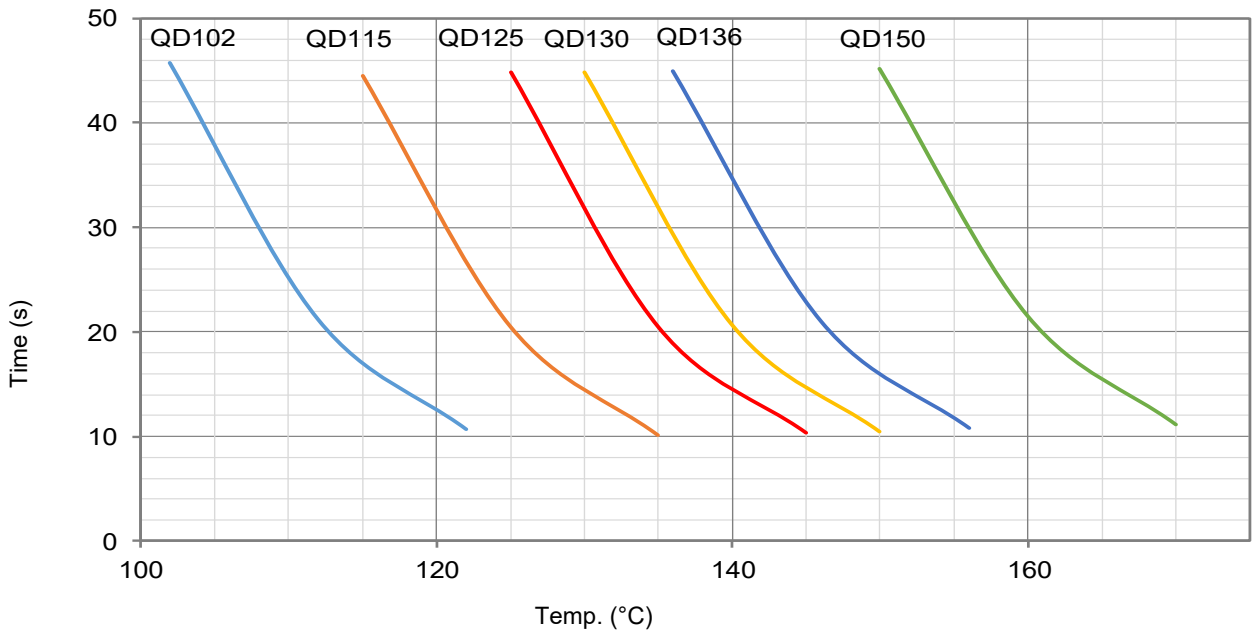

Product Current-Time Curve (Reference)

The Current-Time Curve shows functioning time at multi-times rated current at room temperature 25 ± 2 °C.

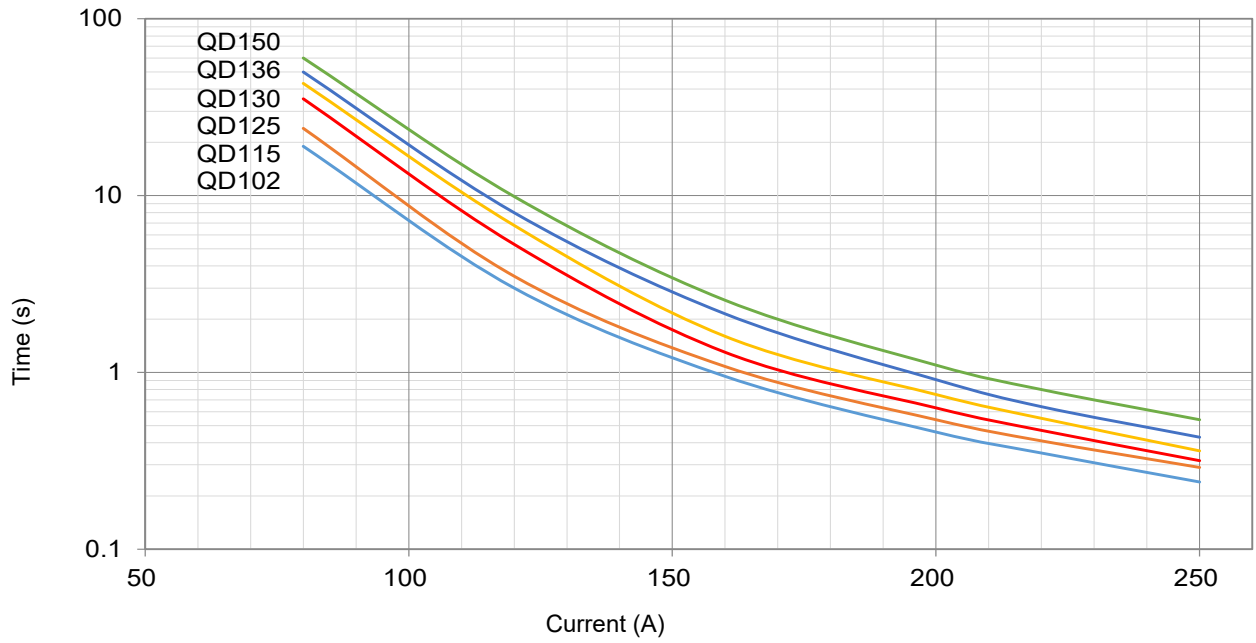

All Rights Reserved by Xiamen SET Electronics Co., Ltd. 2024-2026 V1.1

Packaging Information

Bulk

Item	PE Bag	PE Bag	Carton
Dimensions (mm)	135 × 85	190 × 180	440 × 300 × 260
Quantity (PCS)	30	180	9000
Gross Weight (kg)			23.0 ± 10%

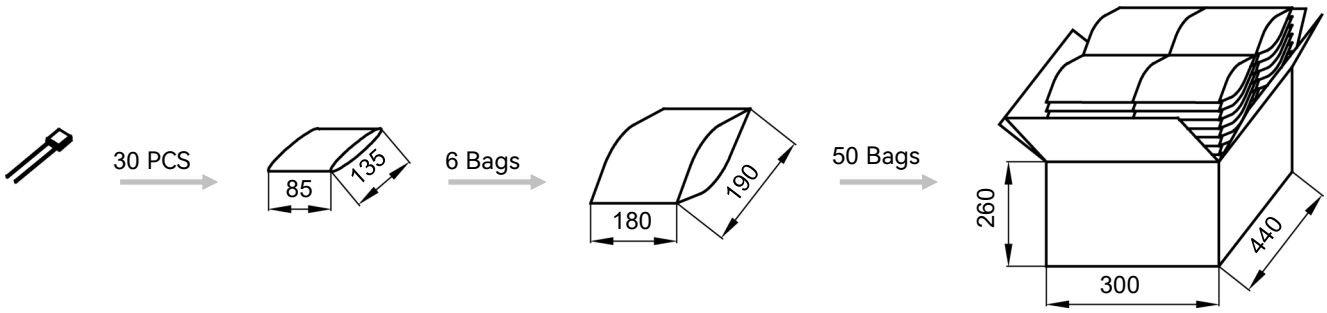

All Rights Reserved by Xiamen SET Electronics Co., Ltd. 2024-2026 V1.1

Part Numbering System

ATCO - QD 115 - A N N A B - 001

Other Options

Packing

B	Bulk
T	Taping

Leads Forming

A	Straight Lead
B	Single Lead Bending
C	Leads Bending
D	Leads Kinking
E	Leads Bending and Kinking

Color of Insulation Tube

N	None

Insulation Tube Material

N	None

Lead Wire Type

A	Tinned Copper Wire

Rated Functioning Temp.

115	115 °C, See Specifications

Series

QD	Series See Specifications

Product Category

ATCO	Alloy Thermal-Link

All Rights Reserved by Xiamen SET Electronics Co., Ltd. 2024-2026 V1.1

Thermal-Link (ATCO)-Alloy Type

N Series

Description

Thermal-Link (ATCO)-Alloy Type is defined as a non-resettable protective device functioning one time only. It is widely used in electrical equipment. ATCO is mainly consist of fusible alloy, flux resin, case, sealant and lead wires. Normally, fusible alloy is jointed to the two lead wires. Under abnormal conditions, when the temp. reaches to the fusing temp. of ATCO, the fusible alloy melts and quickly retracts to the two lead wire ends with the aid of the flux resin and disconnects the circuit completely.

SETsafe | SETfuse Thermal-Link (ATCO)-Alloy Type N series Rated Functioning Temp. from 102 ℃ to 150 ℃, Rated Current: 30 A, safety certification Includes PSE, and complies with RoHS and REACH.

Features

- Non-Resettable
- High Accuracy of Functioning Temp.
- High Surge Capacity
- RoHS & REACH Compliant

Applications

- Surge Protective Devices
- Power Strips
- Lamps
- Switched-Mode Power Supplies
- Home Electrical Appliances
- Batteries

Customization

- Other Temp.
- The Length of Lead Wires
- Leads Forming Types

Structure Diagrams

Radial

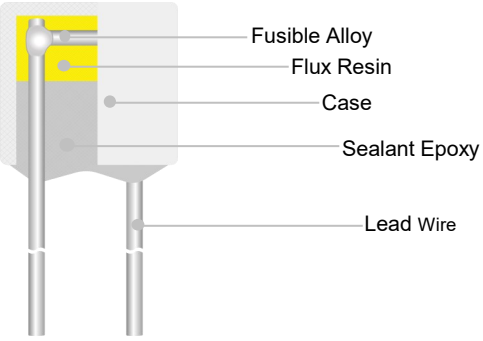

Marking

Radial (Color for reference only)

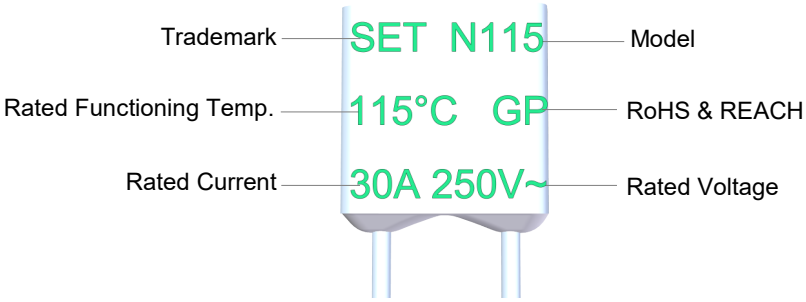

Dimensions (mm)

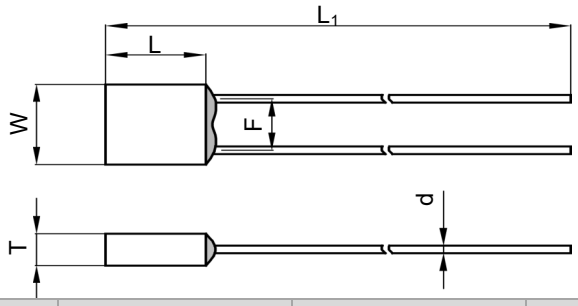

L	L_1	W	T	d	F
13.0 ± 1.0	50.0 ± 2.0	11.5 ± 1.0	4.9 ± 0.8	2.00 ± 0.05	7.2 ± 0.8

All Rights Reserved by Xiamen SET Electronics Co., Ltd. 2024-2026 V1.1

Specifications

Rated Functioning Temp. (T_f) °C

	Model	Fusing Temp.	T_h	T_m	I_r	U_r	I_n 8 / 20 μs (15 Times)	I_{max} 8 / 20 μs (1 Time)	PSE	RoHS REACH
		(°C)	(°C)	(°C)	(A)	(V)	(kA)	(kA)	PSE	
150	N150	146 ± 2	116	160	30	AC 250	20	40	●	●
136	N136	132 ± 2	102	160	30	AC 250	20	40	●	●
130	N130	126 ± 2	96	160	30	AC 250	20	40	●	●
125	N125	122 ± 2	90	160	30	AC 250	20	40	●	●
115	N115	112 ± 2	78	160	30	AC 250	20	40	●	●
102	N102	99 ± 2	65	160	30	AC 250	15	30	●	●

Note:

1: "●"Means certificated, "○"Means non-certificated.

2: RoHS & REACH Compliant .

All Rights Reserved by Xiamen SET Electronics Co., Ltd. 2024-2026 V1.1

Agency Information

Agency Symbol	Standards	The File No. and certification No. obtained by SETsafe | SETfuse
PS E	J60691	JET2121-32001-2032、JET2121-32001-2033 JET2121-32001-2034

Soldering

Hand-Soldering

1. Soldering should be carried out according to Table N-1.
2. The thermal element of ATCO is fusible alloy with low melting point, which is jointed with ATCO lead wires. Improper soldering operation (too high soldering temp. , too long soldering time, too short lead wire etc.) may transfer more heat to the thermal element and ATCO may open in advance.
3. When soldering conditions are more severe than those listed in Table N-1, a heat sink fixture should be used between soldering point and ATCO body.
4. When soldering, please do not pull / push or twist ATCO body or lead wires.
5. After soldering, let it naturally cool for longer than 20 seconds. During cooling, never move the ATCO body or lead wires.

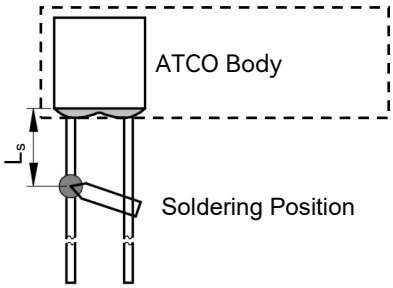

FIGURE N-1

TABLE N-1 Hand-Soldering Time

Rated Functioning Temp. (T_f)	Max. Allowable Soldering Time for Different Lead Wire Length (Fig.N-1)									Max. Soldering Temp.
	L_s Length	Time		L_s Length	Time		L_s Length	Time		
		Tinned Copper Wire	CP Wire		Tinned Copper Wire	CP Wire		Tinned Copper Wire	CP Wire	
(°C)	(mm)	(s)	(s)	(mm)	(s)	(s)	(mm)	(s)	(s)	(°C)
102 to 115	10	1[a]	4	20	2	5	30	3	6	400
116 to 135	10	1[a]	4	20	3	6	30	5	8	
136 to 150	10	3	6	20	5	8	30	5	8	

Note:
a: Auxiliary Heat Sink Fixture is Required to Avoid ATCO Cutting off Unexpectedly.

All Rights Reserved by Xiamen SET Electronics Co., Ltd. 2024-2026 V1.1

Wave Soldering

The wave soldering parameters as Table N-2, for reference only, when ATCO is for practice use, you need to do some validation experiments. For example, using X-RAY to see the fusible alloy of ATCO whether damage after wave soldering.

TABLE N-2 Wave Soldering Parameters Setting

Rated Functioning Temp. (T_f)	Max. Allowable Preheating Temp. When the Length of Lead Wire is Different (Fig.N-1)				Preheating Time (t_1)	Max. Wave Soldering Temp.	Dwelling Time (t_2)	Cooling Time (t_3)
	L_s Length	Preheating Temp.	L_s Length	Preheating Temp.				
(°C)	(mm)	(°C)	(mm)	(°C)	(s)	(°C)	(s)	(s)
102 to 130	Recommend Hand-Soldering							
131 to 150	20	80	30	90	< 60	≤ 260	≤ 3	≤ 10

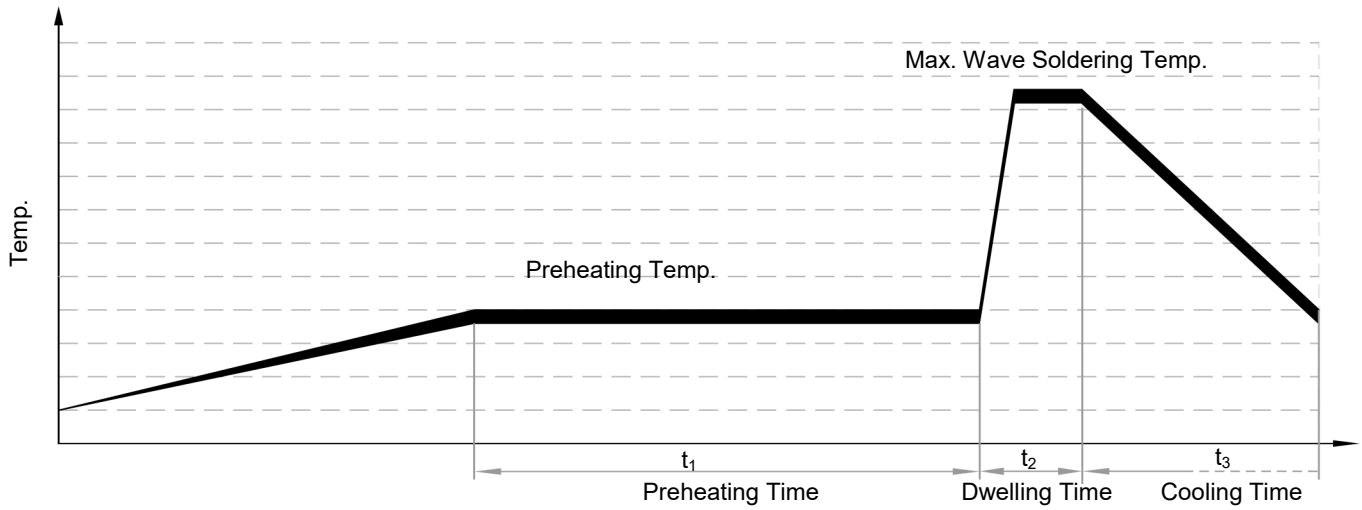

All Rights Reserved by Xiamen SET Electronics Co., Ltd. 2024-2026 V1.1

Product Temp.-Time Curve (Reference)

The Temp.-Time Curve of Thermal-Link in different temp. oil bath.

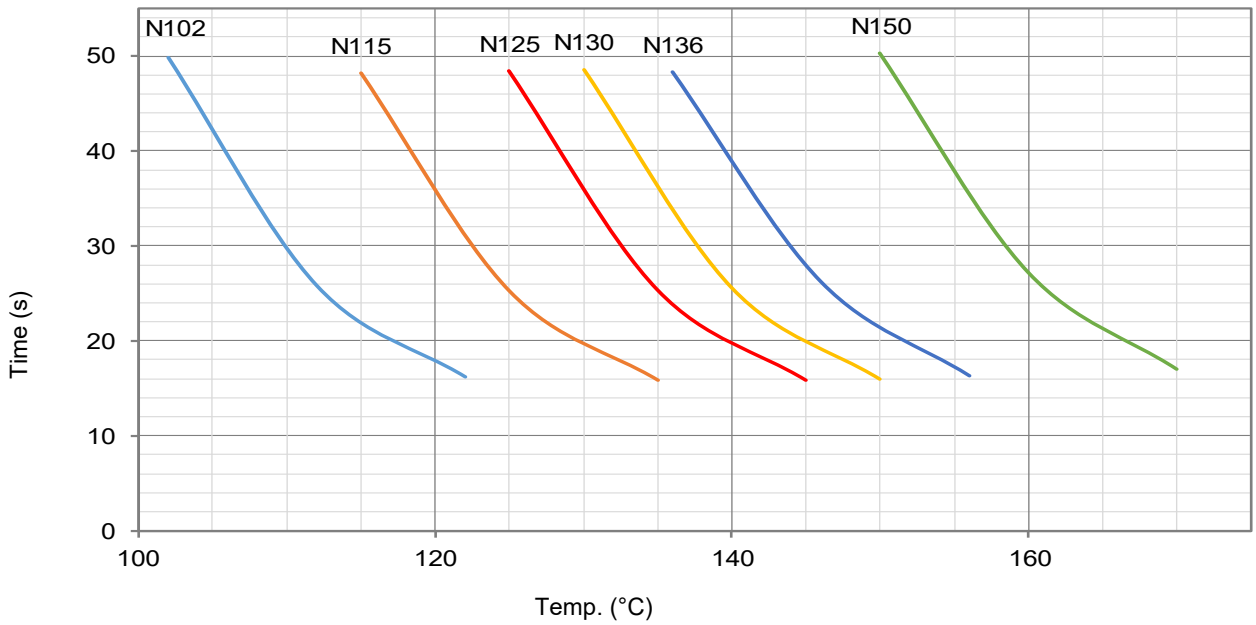

Product Current-Time Curve (Reference)

The Current-Time Curve shows functioning time at multi-times rated current at room temperature 25 ± 2 °C.

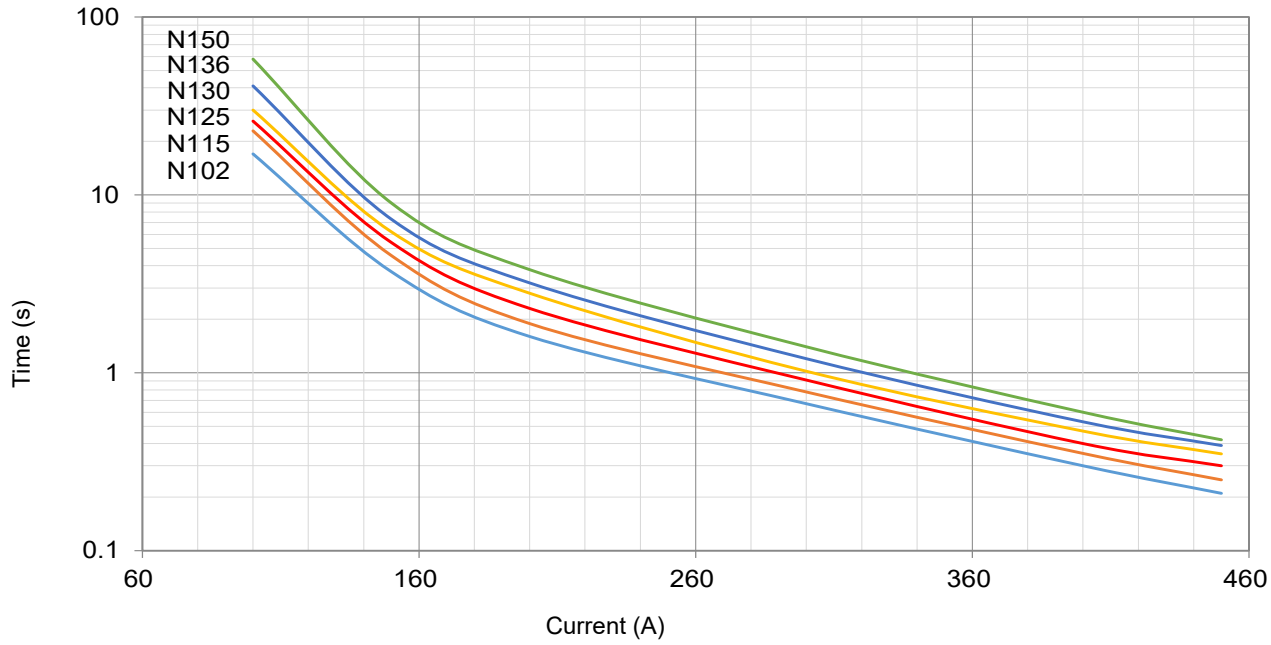

All Rights Reserved by Xiamen SET Electronics Co., Ltd. 2024-2026 V1.1

Packaging Information

Bulk

Item	PE Bag	Box	Carton
Dimensions (mm)	135 × 85	255 × 88 × 98	440 × 300 × 260
Quantity (PCS)	30	300	3000
Gross Weight (kg)			12.5 ± 10%

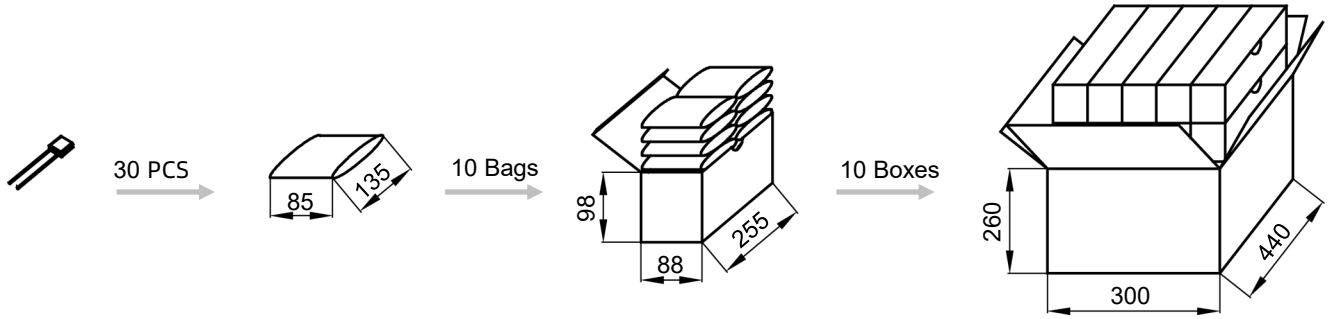

All Rights Reserved by Xiamen SET Electronics Co., Ltd. 2024-2026 V1.1

Part Numbering System

ATCO - N 115 - A N N A B - 001

Other Options

Packing

B	Bulk
T	Taping

Leads Forming

A	Straight Lead
B	Single Lead Bending
C	Leads Bending
D	Leads Kinking
E	Leads Bending and Kinking

Color of Insulation Tube

N	None

Insulation Tube Material

N	None

Lead Wire Type

A	Tinned Copper Wire

Rated Functioning Temp.

115	115 °C, See Specifications

Series

N	Series See Specifications

Product Category

ATCO	Alloy Thermal-Link

All Rights Reserved by Xiamen SET Electronics Co., Ltd. 2024-2026 V1.1

Thermal-Link (ATCO)-Alloy Type

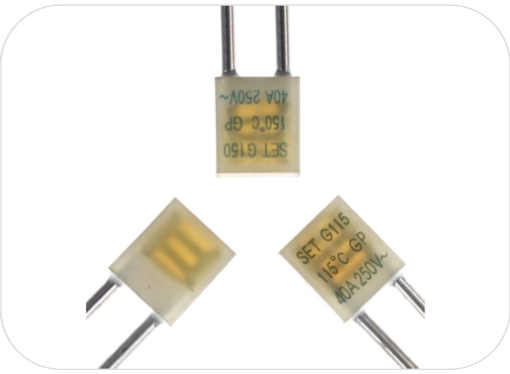

Description

Thermal-Link (ATCO)-Alloy Type is defined as a non-resettable protective device functioning one time only. It is widely used in electrical equipment. ATCO is mainly consist of fusible alloy, flux resin, case, sealant and lead wires. Normally, fusible alloy is jointed to the two lead wires. Under abnormal conditions, when the temp. reaches to the fusing temp. of ATCO, the fusible alloy melts and quickly retracts to the two lead wire ends with the aid of the flux resin and disconnects the circuit completely.

SETsafe | SETfuse Thermal-Link (ATCO)-Alloy Type G series Rated Functioning Temp. from 102 ℃ to 150 ℃, Rated Current: 40 A, safety certification Includes PSE, and complies with RoHS and REACH.

Features

- Non-Resettable
- High Accuracy of Functioning Temp.
- High Surge Capacity
- RoHS & REACH Compliant

Applications

- Surge Protective Devices
- Power Strips
- Lamps
- Switched-Mode Power Supplies
- Home Electrical Appliances
- Batteries

Customization

- Other Temp.
- The Length of Lead Wires
- Leads Forming Types

Structure Diagrams

Radial

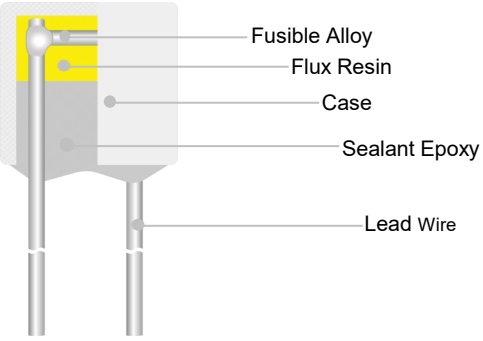

Marking

Radial (Color for reference only)

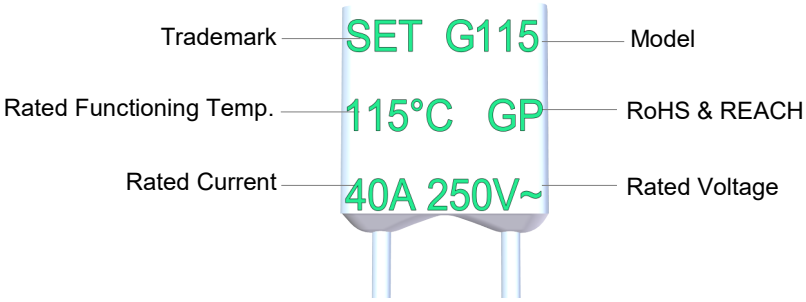

Dimensions (mm)

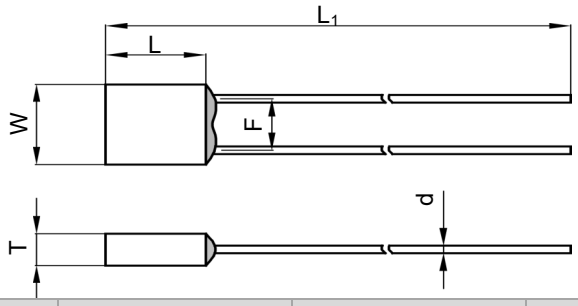

L	L_1	W	T	d	F
15.5 ± 1.0	50.0 ± 2.0	13.8 ± 1.0	5.7 ± 0.8	2.20 ± 0.05	9.0 ± 0.8

All Rights Reserved by Xiamen SET Electronics Co., Ltd. 2024-2026 V1.1

Specifications

Rated Functioning Temp. (T_f) °C

	Model	Fusing Temp.	T_h	T_m	I_r	U_r	I_n 8 / 20 μs (15 Times)	I_{max} 8 / 20 μs (1 Time)	RoHS REACH
		(°C)	(°C)	(°C)	(A)	(V)	(kA)	(kA)	
150	G150	146 ± 2	108	160	40	AC 250	30	60	●
136	G136	132 ± 2	94	160	40	AC 250	30	60	●
130	G130	126 ± 2	88	160	40	AC 250	30	60	●
125	G125	122 ± 2	84	160	40	AC 250	30	60	●
115	G115	112 ± 2	74	160	40	AC 250	30	60	●
102	G102	99 ± 2	61	160	40	AC 250	20	40	●

Note:

1: "●"Means certificated, "○"Means non-certificated.

2: RoHS & REACH Compliant .

All Rights Reserved by Xiamen SET Electronics Co., Ltd. 2024-2026 V1.1

Soldering

Hand-Soldering

1. Soldering should be carried out according to Table G-1.
2. The thermal element of ATCO is fusible alloy with low melting point, which is jointed with ATCO lead wires. Improper soldering operation (too high soldering temp. , too long soldering time, too short lead wire etc.) may transfer more heat to the thermal element and ATCO may open in advance.
3. When soldering conditions are more severe than those listed in Table G-1, a heat sink fixture should be used between soldering point and ATCO body.
4. When soldering, please do not pull / push or twist ATCO body or lead wires.
5. After soldering, let it naturally cool for longer than 20 seconds. During cooling, never move the ATCO body or lead wires.

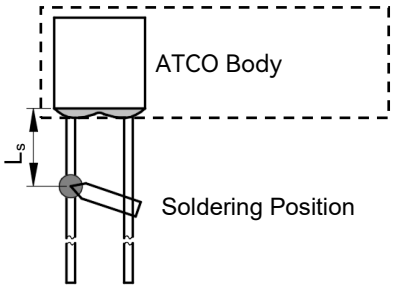

FIGURE G-1

TABLE G-1 Hand-Soldering Time

Rated Functioning Temp. (T_f)	Max. Allowable Soldering Time for Different Lead Wire Length (Fig.G-1)									Max. Soldering Temp.
	L_s Length	Time		L_s Length	Time		L_s Length	Time		
		Tinned Copper Wire	CP Wire		Tinned Copper Wire	CP Wire		Tinned Copper Wire	CP Wire	
(°C)	(mm)	(s)	(s)	(mm)	(s)	(s)	(mm)	(s)	(s)	(°C)
102 to 115	10	1[a]	4	20	2	5	30	3	6	400
116 to 135	10	1[a]	4	20	3	6	30	5	8	
136 to 150	10	3	6	20	5	8	30	5	8	

Note:
a: Auxiliary Heat Sink Fixture is Required to Avoid ATCO Cutting off Unexpectedly.

All Rights Reserved by Xiamen SET Electronics Co., Ltd. 2024-2026 V1.1

Wave Soldering

The wave soldering parameters as Table G-2, for reference only, when ATCO is for practice use, you need to do some validation experiments. For example, using X-RAY to see the fusible alloy of ATCO whether damage after wave soldering.

TABLE G-2 Wave Soldering Parameters Setting

Rated Functioning Temp. (T_f)	Max. Allowable Preheating Temp. When the Length of Lead Wire is Different (Fig.G-1)				Preheating Time (t_1)	Max. Wave Soldering Temp.	Dwelling Time (t_2)	Cooling Time (t_3)
	L_s Length	Preheating Temp.	L_s Length	Preheating Temp.				
(°C)	(mm)	(°C)	(mm)	(°C)	(s)	(°C)	(s)	(s)
102 to 130	Recommend Hand-Soldering							
131 to 150	20	80	30	90	< 60	≤ 260	≤ 3	≤ 10

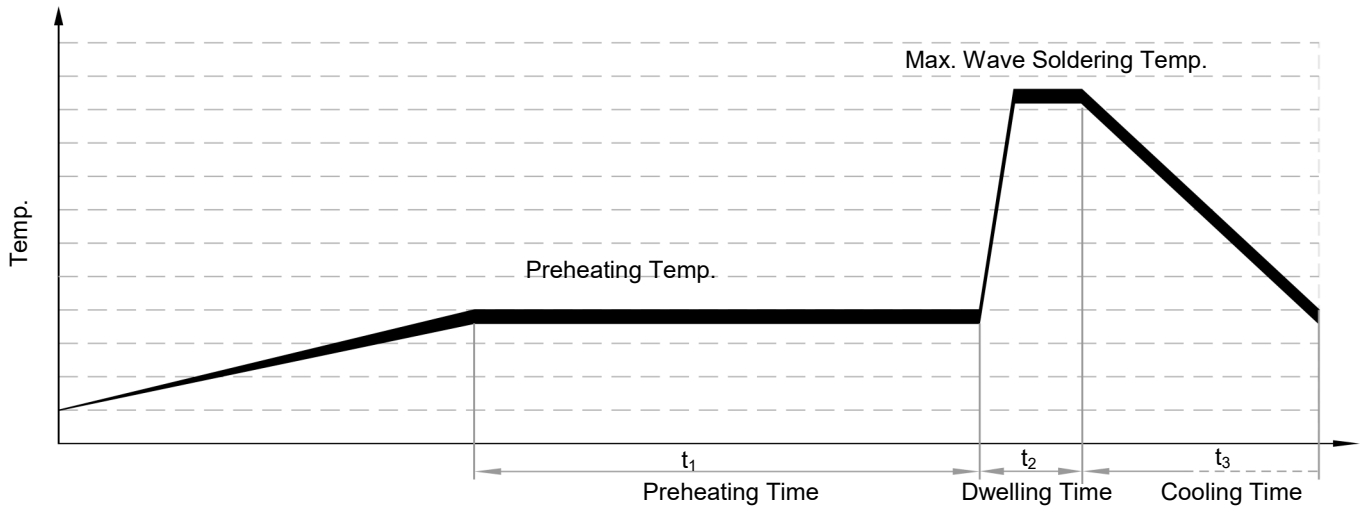

All Rights Reserved by Xiamen SET Electronics Co., Ltd. 2024-2026 V1.1

Product Temp.-Time Curve (Reference)

The Temp.-Time Curve of Thermal-Link in different temp. oil bath.

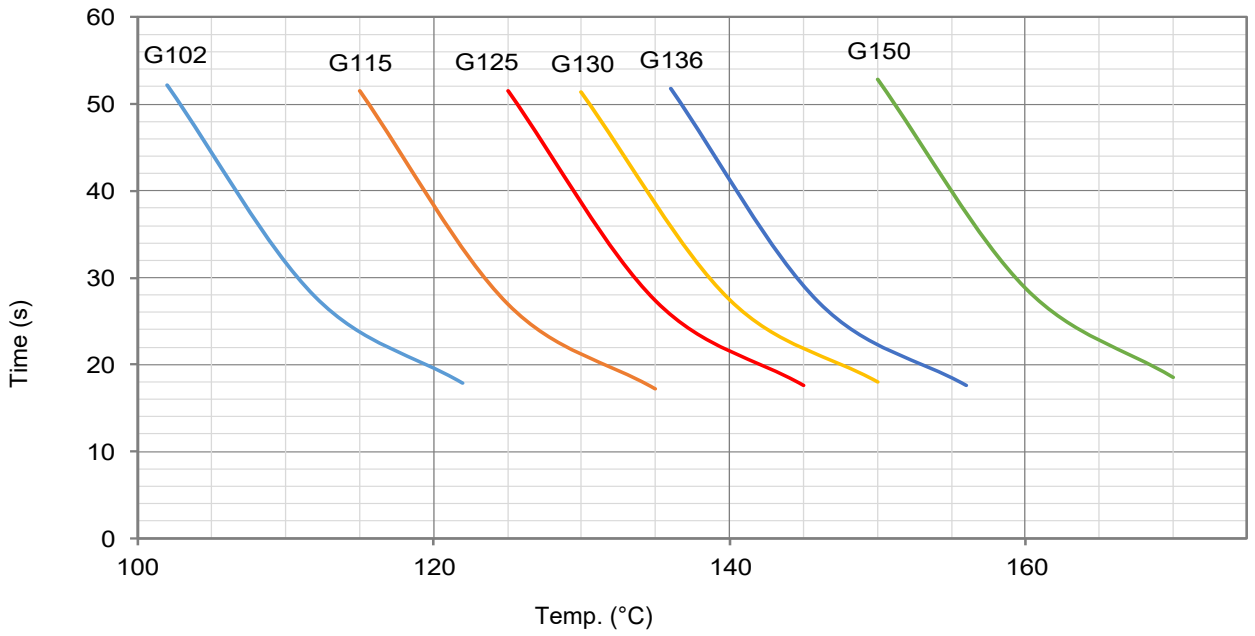

Product Current-Time Curve (Reference)

The Current-Time Curve shows functioning time at multi-times rated current at room temperature 25 ± 2 °C.

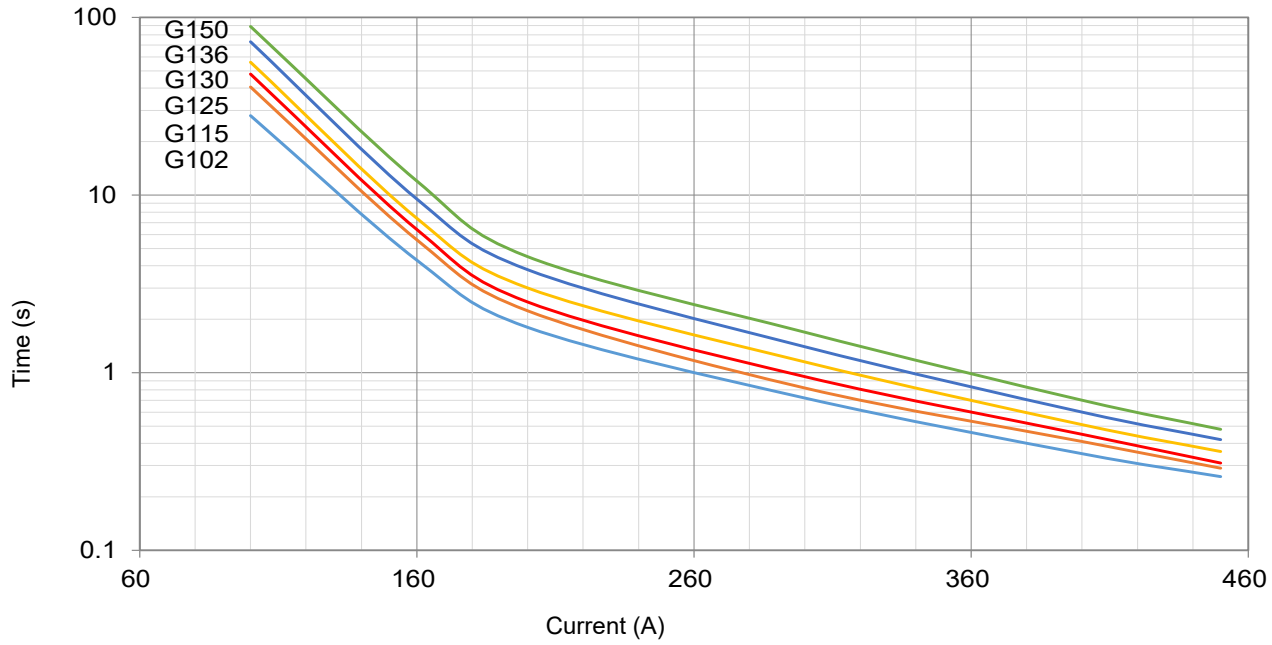

All Rights Reserved by Xiamen SET Electronics Co., Ltd. 2024-2026 V1.1

Packaging Information

Bulk

Item	PE Bag	Box	Carton
Dimensions (mm)	135 × 85	255 × 88 × 98	440 × 300 × 260
Quantity (PCS)	30	300	3000
Gross Weight (kg)			15 ± 10%

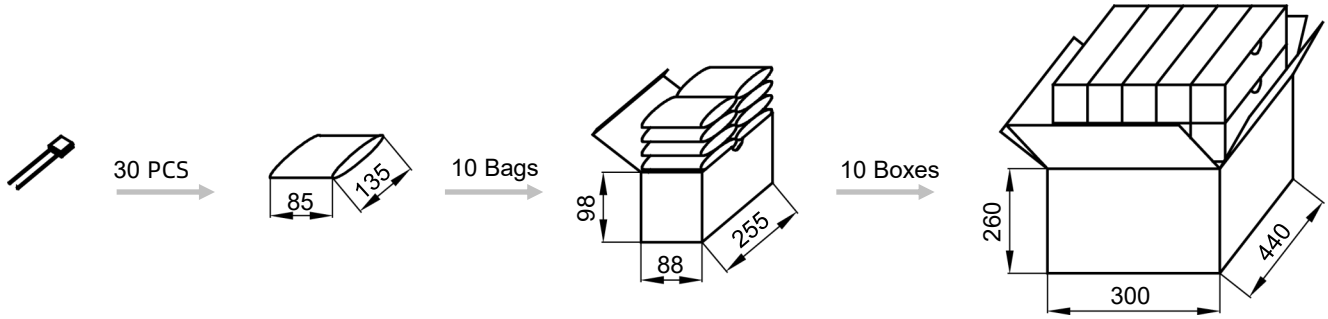

All Rights Reserved by Xiamen SET Electronics Co., Ltd. 2024-2026 V1.1

Part Numbering System

ATCO - G 115 - A N N A B - 001

Other Options

Packing

B	Bulk
T	Taping

Leads Forming

A	Straight Lead
B	Single Lead Bending
C	Leads Bending
D	Leads Kinking
E	Leads Bending and Kinking

Color of Insulation Tube

N	None

Insulation Tube Material

N	None

Lead Wire Type

A	Tinned Copper Wire

Rated Functioning Temp.

115	115 °C, See Specifications

Series

G	Series See Specifications

Product Category

ATCO	Alloy Thermal-Link

All Rights Reserved by Xiamen SET Electronics Co., Ltd. 2024-2026 V1.1

Thermal-Link (ATCO)-Alloy Type

NB Series

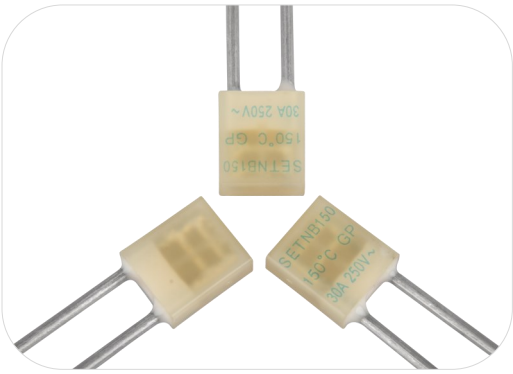

Description

Thermal-Link (ATCO)-Alloy Type is defined as a non-resettable protective device functioning one time only. It is widely used in electrical equipment. ATCO is mainly consist of fusible alloy, flux resin, case, sealant and lead wires. Normally, fusible alloy is jointed to the two lead wires. Under abnormal conditions, when the temp. reaches to the fusing temp. of ATCO, the fusible alloy melts and quickly retracts to the two lead wire ends with the aid of the flux resin and disconnects the circuit completely.

SETsafe | SETfuse Thermal-Link (ATCO)-Alloy Type NB series Rated Functioning Temp. from 115 ℃ to 150 ℃, Rated Current: 30 A, safety certification Includes TUV, PSE, CCC, and complies with RoHS and REACH.

Features

- Non-Resettable
- High Accuracy of Functioning Temp.
- High Surge Capacity
- RoHS & REACH Compliant

Applications

- Surge Protective Devices
- Power Strips
- Lamps
- Switched-Mode Power Supplies
- Home Electrical Appliances
- Batteries

Customization

- Other Temp.
- The Length of Lead Wires
- Leads Forming Types

Structure Diagrams

Radial

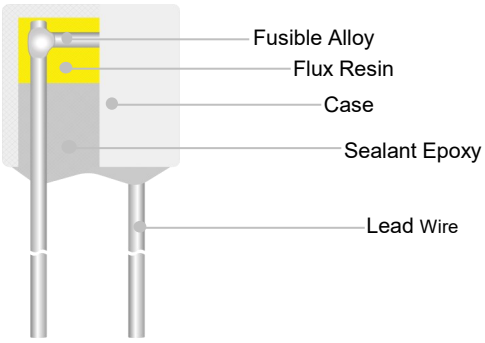

Marking

Radial (Color for reference only)

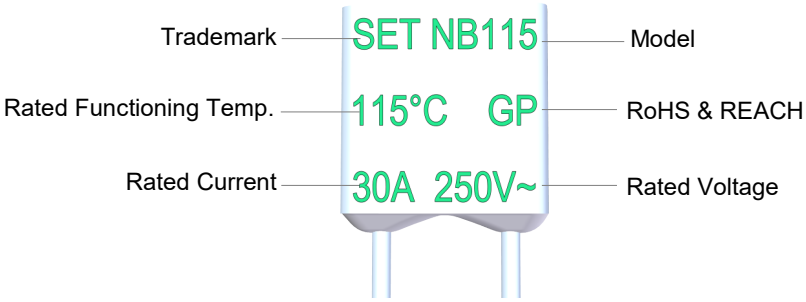

Dimensions (mm)

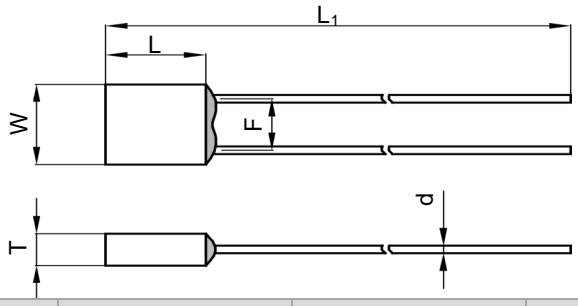

L	L_1	W	T	d	F
13.0 ± 1.0	50.0 ± 2.0	11.5 ± 1.0	4.9 ± 0.8	1.70 ± 0.05	7.4 ± 0.8

All Rights Reserved by Xiamen SET Electronics Co., Ltd. 2024-2026 V1.1

Specifications

Rated Functioning Temp. (T_f) °C

	Model	Fusing Temp.	T_h	T_m	I_r	U_r	I_n 8 / 20 μs (15 Times)	I_{max} 8 / 20 μs (1 Time)				RoHS REACH
		(°C)	(°C)	(°C)	(A)	(V)	(kA)	(kA)	TUV	PSE	CCC	
150	NB150	146 ± 2	116 104[a]	160	30	AC 250	20	40	●	●	●	●
136	NB136	132 ± 2	102 90[a]	160	30	AC 250	20	40	●	●	●	●
115	NB115	112 ± 2	78 66[a]	160	30	AC 250	20	40	●	●	●	●

Note:

1: "●"Means certificated, "○"Means non-certificated.

2: RoHS & REACH Compliant .

3: " a ": The temperature measurement point for holding temperature (T_h) shall be positioned 50 mm away from the product body, in accordance with the requirements specified in Appendix H.11.2 of IEC 60691:2015 and Appendix I of GB/T 9816.1-2023.

All Rights Reserved by Xiamen SET Electronics Co., Ltd. 2024-2026 V1.1

Agency Information

Agency Symbol	Standards	The File No. and certification No. obtained by SETsafe | SETfuse
	EN 60691	R50447212
	J60691	JET2121-32001-2032、JET2121-32001-2033 JET2121-32001-2034
	GB 9816.1	2020980205000175

Soldering

Hand-Soldering

1. Soldering should be carried out according to Table NB-1.
2. The thermal element of ATCO is fusible alloy with low melting point, which is jointed with ATCO lead wires. Improper soldering operation (too high soldering temp. , too long soldering time, too short lead wire etc.) may transfer more heat to the thermal element and ATCO may open in advance.
3. When soldering conditions are more severe than those listed in Table NB-1, a heat sink fixture should be used between soldering point and ATCO body.
4. When soldering, please do not pull / push or twist ATCO body or lead wires.
5. After soldering, let it naturally cool for longer than 20 seconds. During cooling, never move the ATCO body or lead wires.

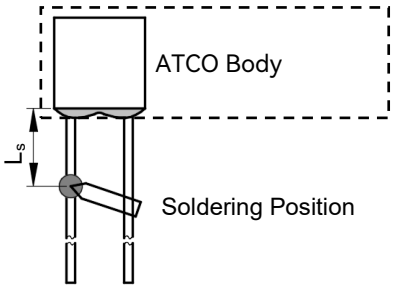

FIGURE NB-1

TABLE NB-1 Hand-Soldering Time

Rated Functioning Temp. (T_f)	Max. Allowable Soldering Time for Different Lead Wire Length (Fig.NB-1)									Max. Soldering Temp.
	L_s Length	Time		L_s Length	Time		L_s Length	Time		
		Tinned Copper Wire	CP Wire		Tinned Copper Wire	CP Wire		Tinned Copper Wire	CP Wire	
(°C)	(mm)	(s)	(s)	(mm)	(s)	(s)	(mm)	(s)	(s)	(°C)
102 to 115	10	1[a]	4	20	2	5	30	3	6	400
116 to 135	10	1[a]	4	20	3	6	30	5	8	
136 to 150	10	3	6	20	5	8	30	5	8	

Note:
a: Auxiliary Heat Sink Fixture is Required to Avoid ATCO Cutting off Unexpectedly.

All Rights Reserved by Xiamen SET Electronics Co., Ltd. 2024-2026 V1.1

Wave Soldering

The wave soldering parameters as Table NB-2, for reference only, when ATCO is for practice use, you need to do some validation experiments. For example, using X-RAY to see the fusible alloy of ATCO whether damage after wave soldering.

TABLE NB-2 Wave Soldering Parameters Setting

Rated Functioning Temp. (T_f)	Max. Allowable Preheating Temp. When the Length of Lead Wire is Different (Fig.NB-1)				Preheating Time (t_1)	Max. Wave Soldering Temp.	Dwelling Time (t_2)	Cooling Time (t_3)
	L_s Length	Preheating Temp.	L_s Length	Preheating Temp.				
(°C)	(mm)	(°C)	(mm)	(°C)	(s)	(°C)	(s)	(s)
115 to 130	Recommend Hand-Soldering							
131 to 150	20	80	30	90	< 60	≤ 260	≤ 3	≤ 10

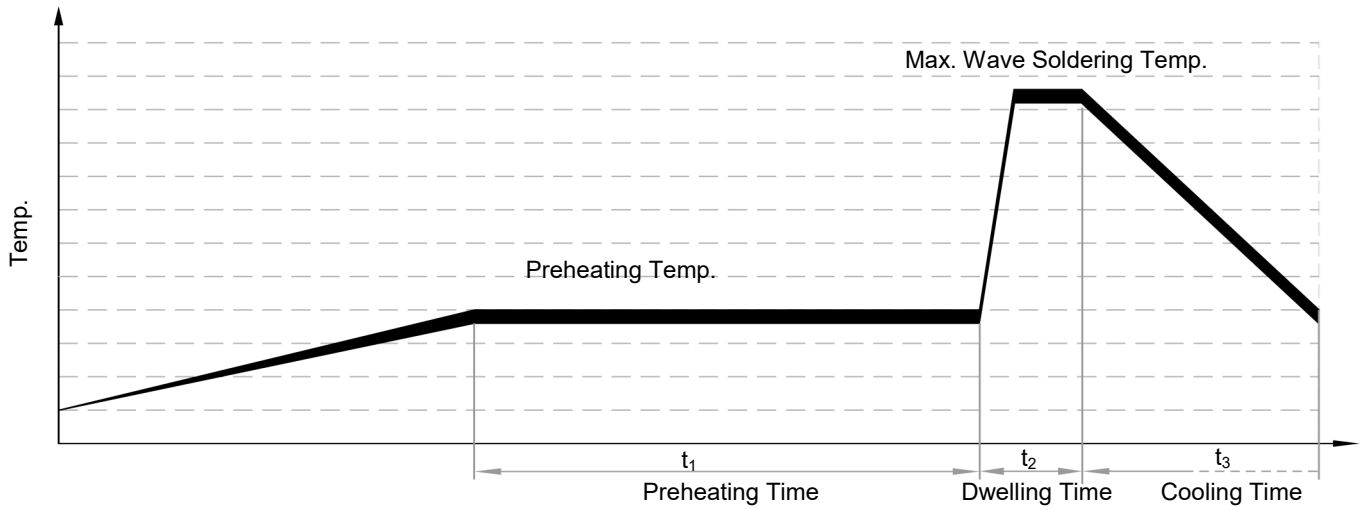

All Rights Reserved by Xiamen SET Electronics Co., Ltd. 2024-2026 V1.1

Product Temp.-Time Curve (Reference)

The Temp.-Time Curve of Thermal-Link in different temp. oil bath.

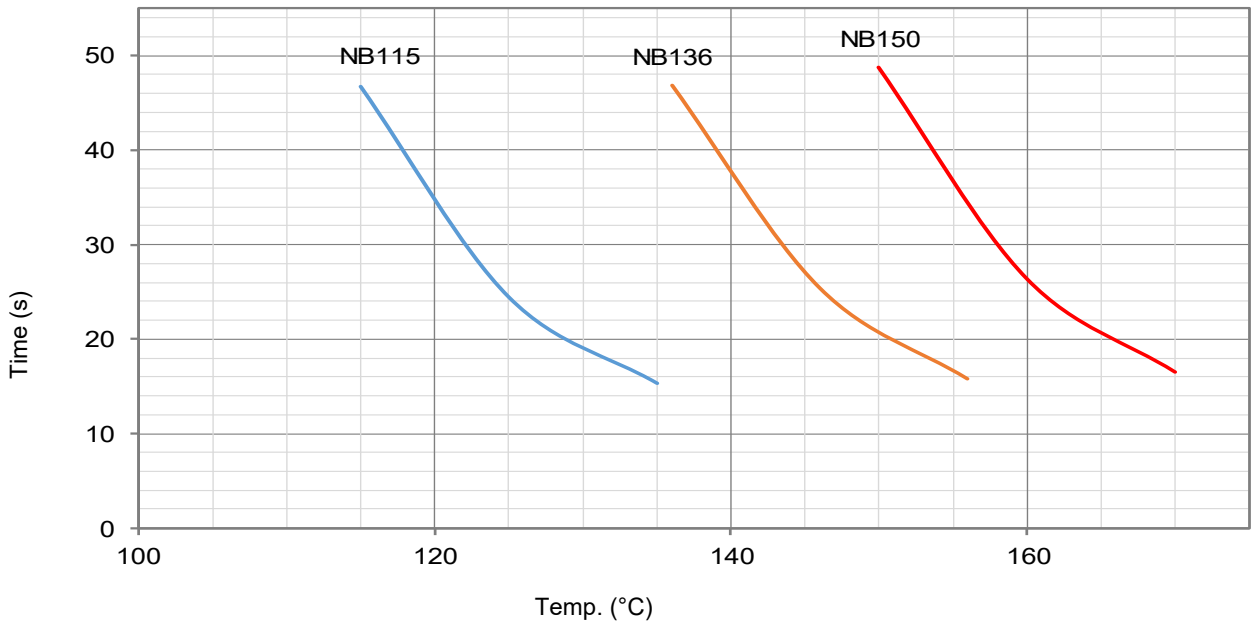

Product Current-Time Curve (Reference)

The Current-Time Curve shows functioning time at multi-times rated current at room temperature 25 ± 2 °C.

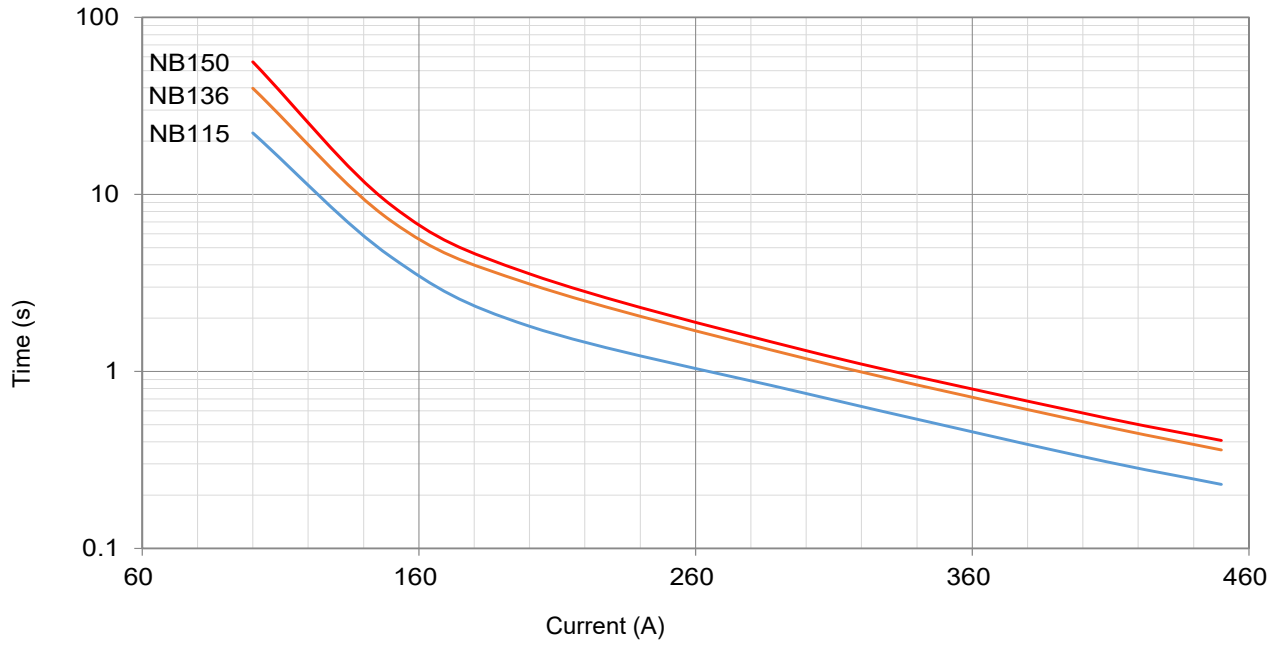

All Rights Reserved by Xiamen SET Electronics Co., Ltd. 2024-2026 V1.1

Packaging Information

Bulk

Item	PE Bag	Box	Carton
Dimensions (mm)	135 × 85	255 × 88 × 98	440 × 300 × 260
Quantity (PCS)	30	300	3000
Gross Weight (kg)			12.5 ± 10%

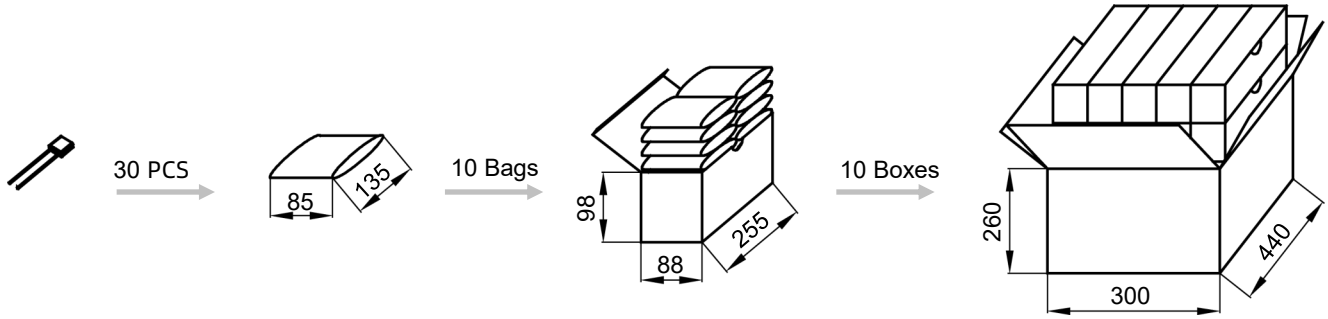

All Rights Reserved by Xiamen SET Electronics Co., Ltd. 2024-2026 V1.1

Part Numbering System

ATCO - NB 115 - A N N A B - 001

Other Options

Packing

B	Bulk
T	Taping

Leads Forming

A	Straight Lead
B	Single Lead Bending
C	Leads Bending
D	Leads Kinking
E	Leads Bending and Kinking

Color of Insulation Tube

N	None

Insulation Tube Material

N	None

Lead Wire Type

A	Tinned Copper Wire

Rated Functioning Temp.

115	115 °C, See Specifications

Series

NB	Series See Specifications

Product Category

ATCO	Alloy Thermal-Link

All Rights Reserved by Xiamen SET Electronics Co., Ltd. 2024-2026 V1.1

Thermal-Link (ATCO)-Alloy Type

Description

Alloy Thermal-Link / Alloy Thermal Cutoff (ATCO) is defined as a non-resettable protective device functioning one time only. It is widely used in electrical equipment. ATCO is mainly consist of fusible alloy, flux resin, case, sealant and lead wires. Normally, fusible alloy is jointed to the two lead wires. Under abnormal conditions, when the temp. reaches to the fusing temp. of ATCO, the fusible alloy melts and quickly retracts to the two lead wire ends with the aid of the flux resin and disconnects the circuit completely.

SETsafe | SETfuse Alloy Thermal-Link (ATCO) V series Rated Functioning Temp. from 76 ℃ to 221 ℃, Rated Current: 1 A, 2.5A, 4A, safety certification Includes UL, cUL, TUV, PSE, KC, CCC, and complies with RoHS and REACH.

Features

- Non-Resettable
- High Accuracy of Functioning Temp.
- RoHS & REACH Compliant

Applications

- Lamps
- Switched-Mode Power Supplies
- Home Electrical Appliances
- Transformers
- Motors
- Batteries

Customization

- Other Temp.
- The Length of Lead Wires
- Taping Packing Available
- Lead Wires can be Insulated
- Tinned Copper Wires or CP Wires
- Leads Forming Types

Structure Diagrams

Axial

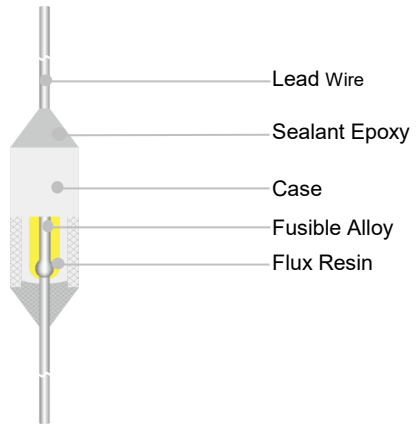

Marking

Axial (Color for reference only)

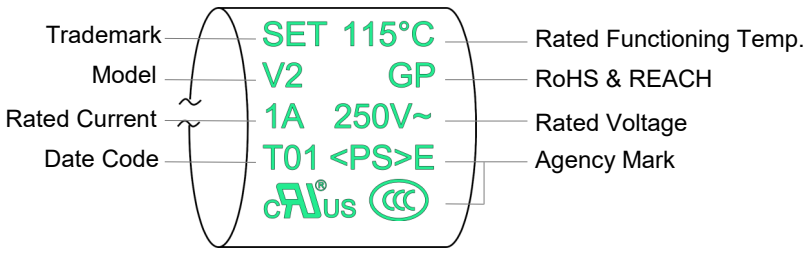

Remark: The first letter of the Date Code Year/quarter A stands for 2000, B stands for 2001, 01 stands for the first quarter, 02 stands for the second quarter, and so on.

Dimensions (mm)

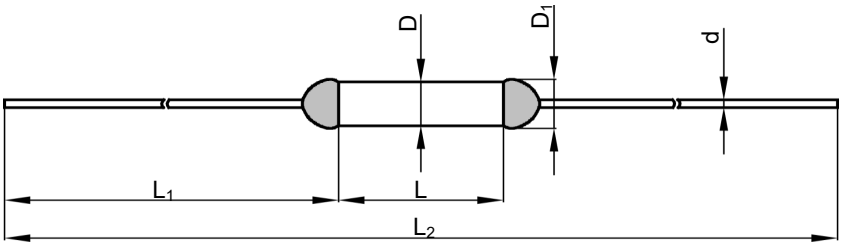

Regular Products	L	L_1	L_2	D	D_1	d
	6.5 ± 0.5	36.0 ± 2.0	78.5 ± 3.0	2.1 ± 0.5	≤ 2.6	0.50 ± 0.05
V16/V31/V32	L	L_1	L_2	D	D_1	d
	9.0 ± 0.5	35.0 ± 2.0	79.0 ± 3.0	2.5 ± 0.5	≤ 3.0	0.54 ± 0.05

All Rights Reserved by Xiamen SET Electronics Co., Ltd. 2024-2026 V1.1

Specifications

Rated Functioning Temp. (T_f) °C

	Model	Fusing Temp. (°C)	T_h (°C)	T_m (°C)	I_r (A)	U_r (V)	UL	cUL	TUV	PSE	KC	CCC	RoHS REACH
221	V31	218 ± 2	188	250	1	AC 250	●	●	●	●	○	●	●
						AC 125	●	●	○	●	○	○	●
						DC 60	●	●	●	○	○	●	●
205	V32	199 ± 3	169	250	1	AC 250	○	○	●	●	○	●	●
						AC 125	●	●	○	●	○	○	●
						DC 60	●	●	●	○	○	●	●
187	V17	182 ± 3	162	250	1	AC 250	●	●	●	●	●	●	●
						DC 60	●	●	●	○	○	○	●
160	V16	154 ± 2	135	200	1	AC 250	○	○	●	●	○	●	●
						DC 60	○	○	●	○	○	●	●
150	V7	145 ± 2	126	200	1	AC 250	●	●	●	●	●	●	●
						DC 50	●	●	○	○	○	○	●
145	V6	140 ± 2	121	200	1	AC 250	●	●	●	●	●	●	●
						DC 50	●	●	○	○	○	○	●
139	V13	135 ± 2	115	200	1	AC 250	●	●	●	●	●	●	●
						DC 50	●	●	○	○	○	○	●
			90		4	DC 60	●	●	●	○	○	○	●
136	V9	131 ± 2	112	200	1	AC 250	●	●	●	●	●	●	●
						DC 50	●	●	○	○	○	○	●
135	V5	130 ± 2	111	200	1	AC 250	●	●	●	●	●	●	●
						DC 50	●	●	○	○	○	○	●
133	V8	130 ± 2	111	200	1	AC 250	●	●	●	●	●	●	●
						DC 50	●	●	○	○	○	○	●
			80		4	DC 60	●	●	●	○	○	○	●
130	V4	125 ± 2	106	200	1	AC 250	●	●	●	●	●	●	●
						DC 50	●	●	○	○	○	○	●
			100		4	DC 60	●	●	●	○	○	○	●
125	V3	121 ± 2	100	200	1	AC 250	●	●	●	●	●	●	●
						DC 50	●	●	○	○	○	○	●
115	V2	111 ± 2	91	200	1	AC 250	●	●	●	●	●	●	●
						DC 50	●	●	○	○	○	○	●
			80		4	DC 60	●	●	●	○	○	○	●
102	V1	98 ± 3	79	200	1	AC 250	○	○	●	●	●	●	●
						AC 125	●	●	○	●	○	○	●
						DC 50	●	●	○	○	○	○	●
97	V21	92 ± 3	70	200	1	AC 250	○	○	○	●	○	○	●
						AC 125	●	●	○	●	○	○	●
						DC 50	●	●	○	○	○	○	●
86	V18	81 ± 3	61	200	1	AC 250	○	○	●	●	●	●	●
						AC 125	●	●	○	●	○	○	●
						DC 50	●	●	○	○	○	○	●
			55		2.5	DC 60	●	●	●	○	○	○	●
76	V0	73 ± 2	53	200	1	AC 250	○	○	●	●	●	●	●
						AC 125	●	●	○	●	○	○	●
						DC 50	●	●	○	○	○	○	●

Note:

1: "●"Means certificated, "○"Means non-certificated, RoHS & REACH Compliant .

2: " * "Customizable DC voltage.

All Rights Reserved by Xiamen SET Electronics Co., Ltd. 2024-2026 V1.1

Agency Information

Institution	Standards	The File No. and certification No. obtained by SETsafe | SETfuse
	UL 60691	E214712
	CAN-CSA-E60691	E214712
	EN 60691	R50112716
	J60691	JET2121-32001-2021、JET2121-32001-2022 JET2121-32001-2023、JET2121-32001-2024 JET2121-32001-2025、JET2121-32001-2026
	K60691	SU05023-11001、SU05023-11002 SU05023-11003
	GB 9816.1	2020980205000185 、2020980205000183

Soldering

Hand-Soldering

1. Soldering should be carried out according to Table V-1.
2. The thermal element of ATCO is fusible alloy with low melting point, which is jointed with ATCO lead wires. Improper soldering operation (too high soldering temp. , too long soldering time, too short lead wire etc.) may transfer more heat to the thermal element and ATCO may open in advance.
3. When soldering conditions are more severe than those listed in Table V-1, a heat sink fixture should be used between soldering point and ATCO body.
4. When soldering, please do not pull / push or twist ATCO body or lead wires.
5. After soldering, let it naturally cool for longer than 20 seconds. During cooling, never move the ATCO body or lead wires.

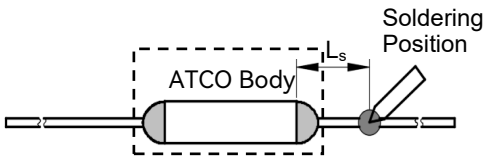

FIGURE V-1

TABLE V-1 Hand-Soldering Time

Rated Functioning Temp. (T_f)	Max. Allowable Soldering Time for Different Lead Wire Length (Fig.V-1)									Max. Soldering Temp.
	L_s Length	Time		L_s Length	Time		L_s Length	Time		
		Tinned Copper Wire	CP Wire		Tinned Copper Wire	CP Wire		Tinned Copper Wire	CP Wire	
(°C)	(mm)	(s)	(s)	(mm)	(s)	(s)	(mm)	(s)	(s)	(°C)
76 to 101	10	1[a]	4	20	2	5	30	3	6	400
102 to 115	10	1[a]	4	20	2	5	30	3	6	
116 to 135	10	1[a]	4	20	3	6	30	5	8	
136 to 150	10	3	6	20	5	8	30	5	8	
151 to 221	10	4	7	20	6	9	30	7	10	

Note:
a: Auxiliary Heat Sink Fixture is Required to Avoid ATCO Cutting off Unexpectedly.

All Rights Reserved by Xiamen SET Electronics Co., Ltd. 2024-2026 V1.1

Wave Soldering

The wave soldering parameters as Table V-2, for reference only, when ATCO is for practice use, you need to do some validation experiments. For example, using X-RAY to see the fusible alloy of ATCO whether damage after wave soldering.

TABLE V-2 Wave Soldering Parameters Setting

Rated Functioning Temp. (T_f)	Max. Allowable Preheating Temp. When the Length of Lead Wire is Different (Fig.V-1)				Preheating Time (t_1)	Max. Wave Soldering Temp.	Dwelling Time (t_2)	Cooling Time (t_3)
	L_s Length	Preheating Temp.	L_s Length	Preheating Temp.				
(°C)	(mm)	(°C)	(mm)	(°C)	(s)	(°C)	(s)	(s)
76 to 130	Recommend Hand-Soldering							
131 to 150	20	80	30	90	< 60	≤ 260	≤ 3	≤ 10
151 to 221	20	90	30	100	< 60	≤ 260	≤ 3	≤ 10

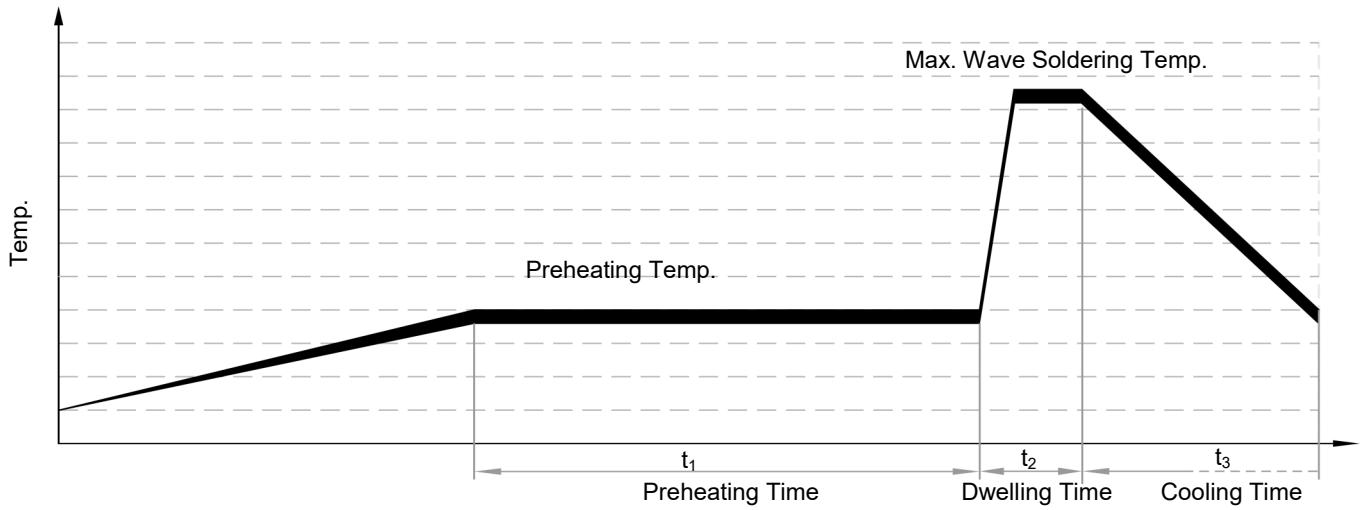

All Rights Reserved by Xiamen SET Electronics Co., Ltd. 2024-2026 V1.1

Product Temp.-Time Curve (Reference)

The Temp.-Time Curve of Thermal-Link in different temp. oil bath.

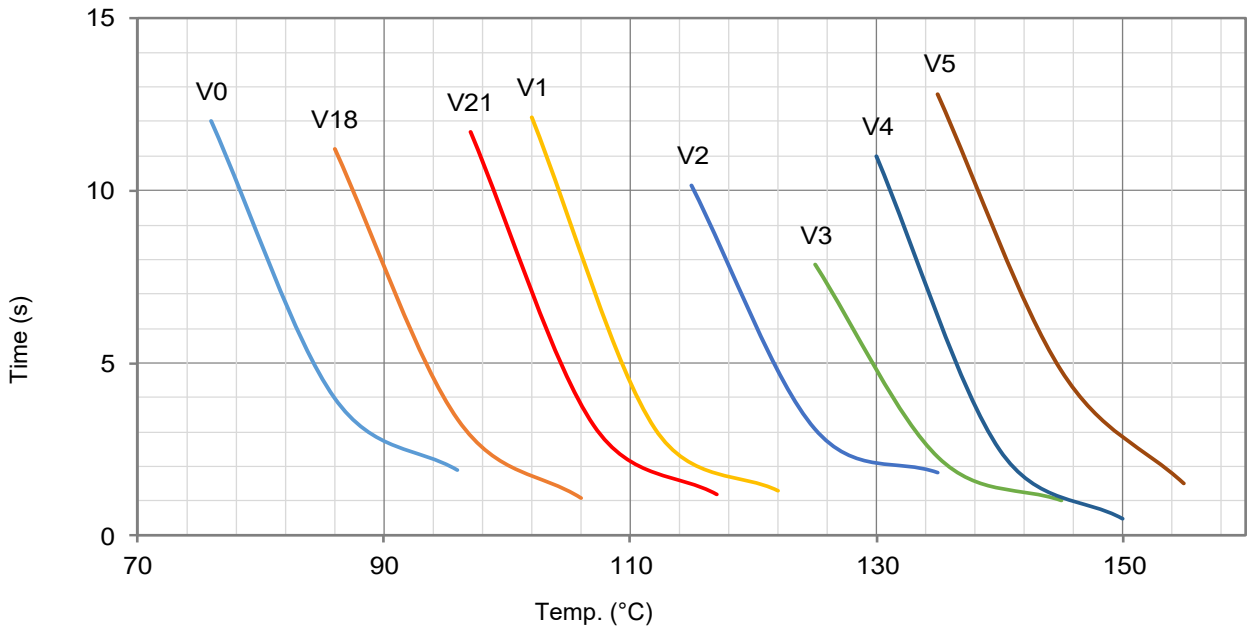

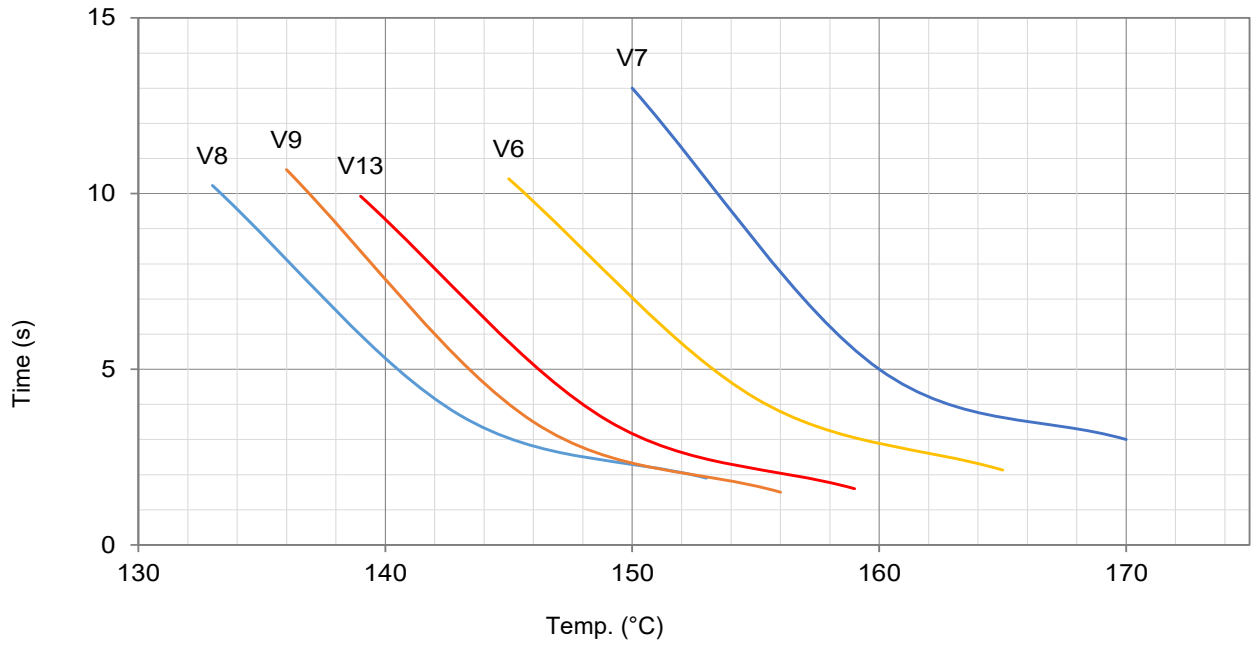

All Rights Reserved by Xiamen SET Electronics Co., Ltd. 2024-2026 V1.1

Product Temp.-Time Curve (Reference)

The Temp.-Time Curve of Thermal-Link in different temp. oil bath.

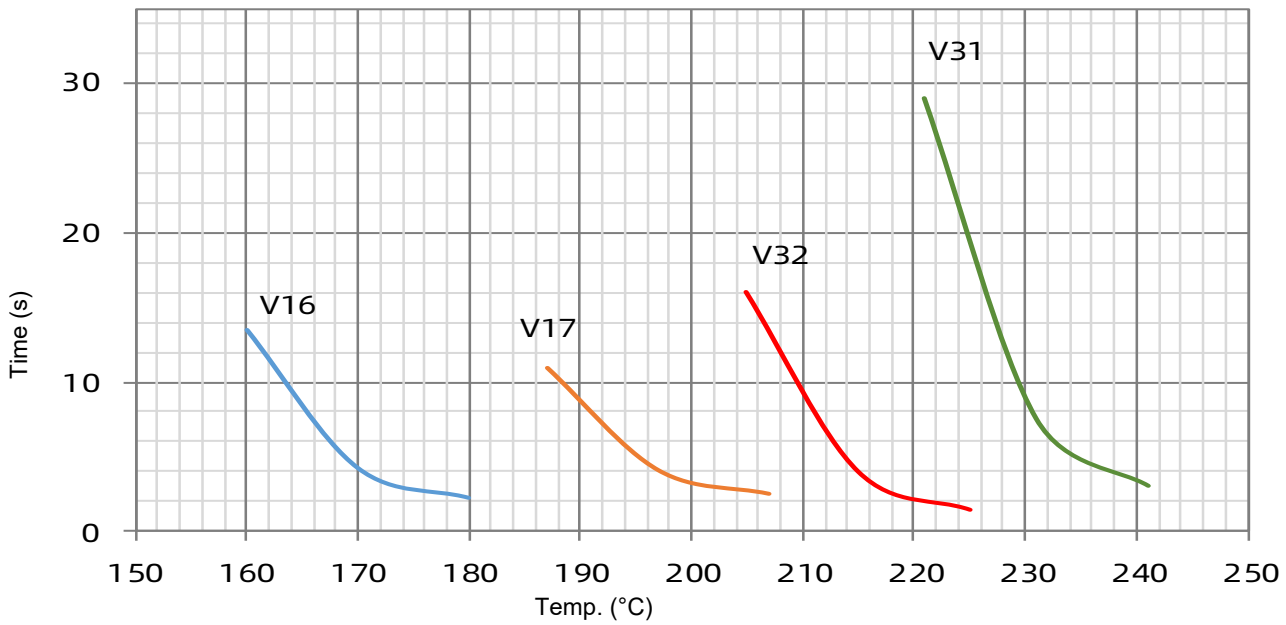

Product Current-Time Curve (Reference)

The Current-Time Curve shows functioning time at multi-times rated current at room temperature 25 ± 2 °C.

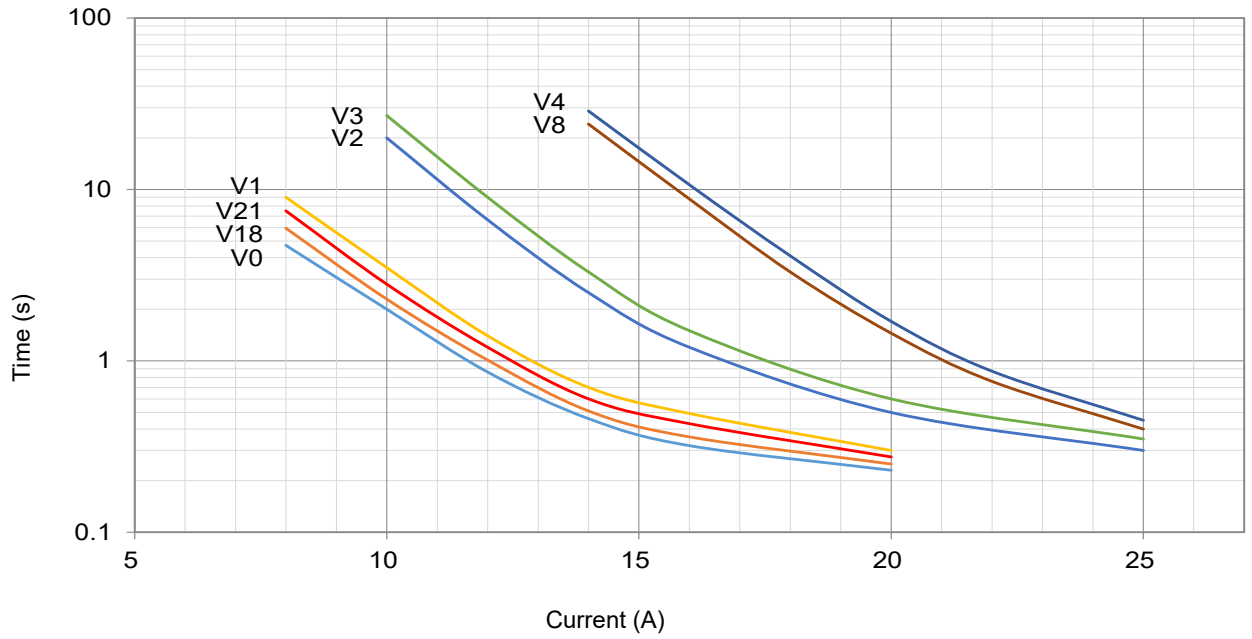

All Rights Reserved by Xiamen SET Electronics Co., Ltd. 2024-2026 V1.1

Product Current-Time Curve (Reference)

The Current-Time Curve shows functioning time at multi-times rated current at room temperature 25 ± 2 °C.

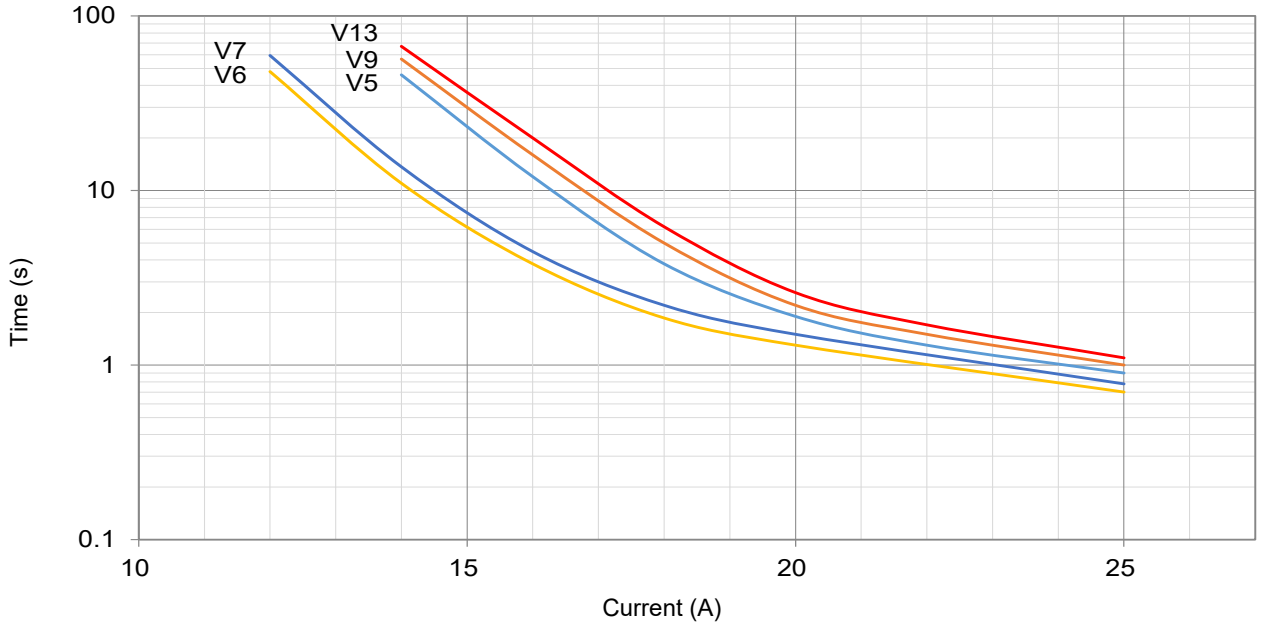

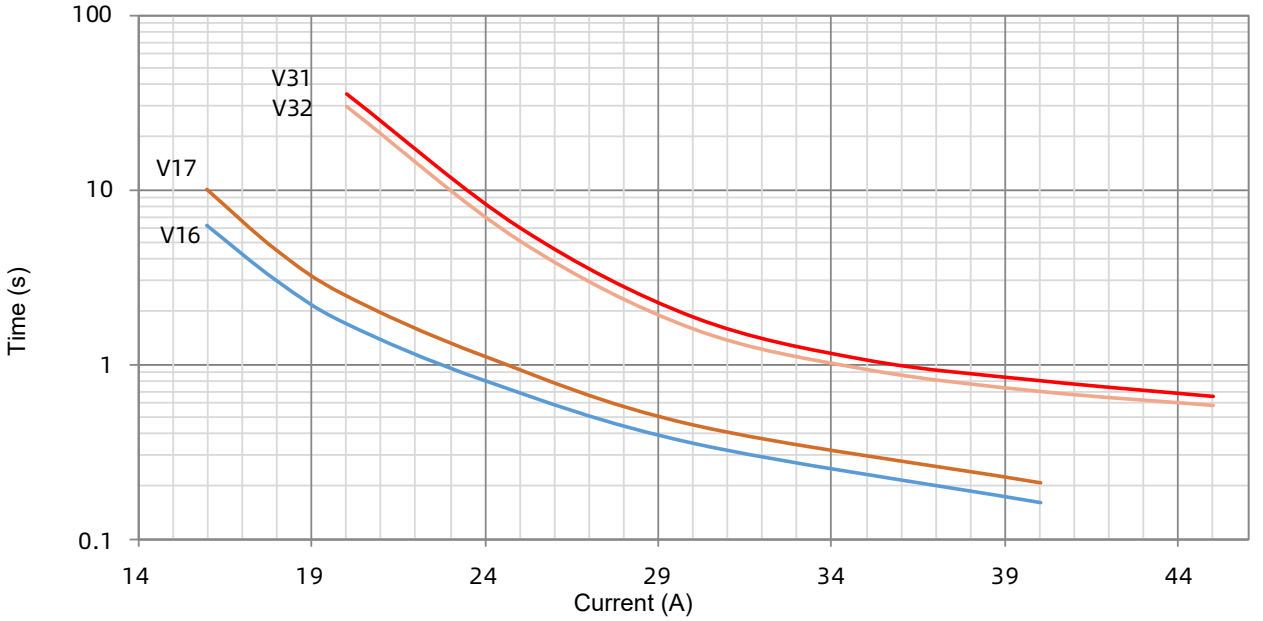

All Rights Reserved by Xiamen SET Electronics Co., Ltd. 2024-2026 V1.1

Packaging Information

Bulk

Item	PE Bag	PE Bag	Carton
Dimensions (mm)	135 × 85	190 × 180	440 × 300 × 260
Quantity (PCS)	100	1000	50000
Gross Weight (kg)			11.5 ± 10%

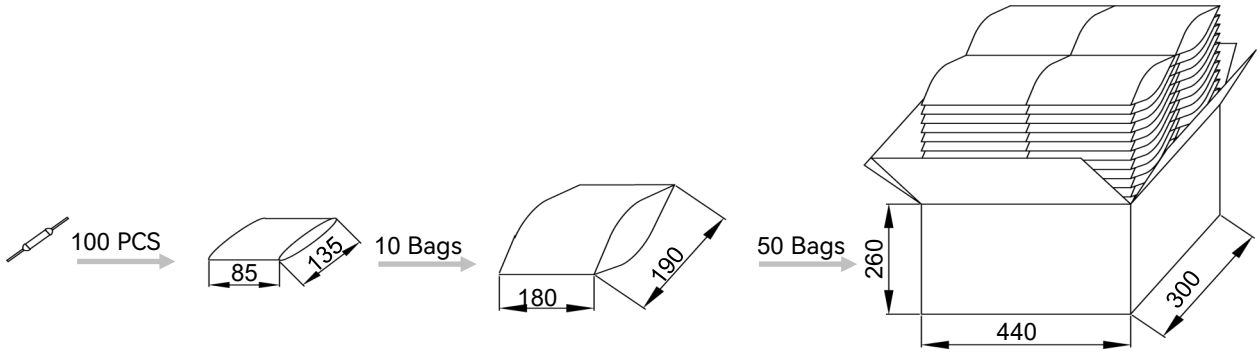

Taping

Item	**Scroll**	Box	Carton
Dimensions (mm)	Φ 250 × 94	258 × 258 × 98	480 × 300 × 260
Quantity (PCS)	2500	2500	10000
Gross Weight (kg)			4.2 ± 10%

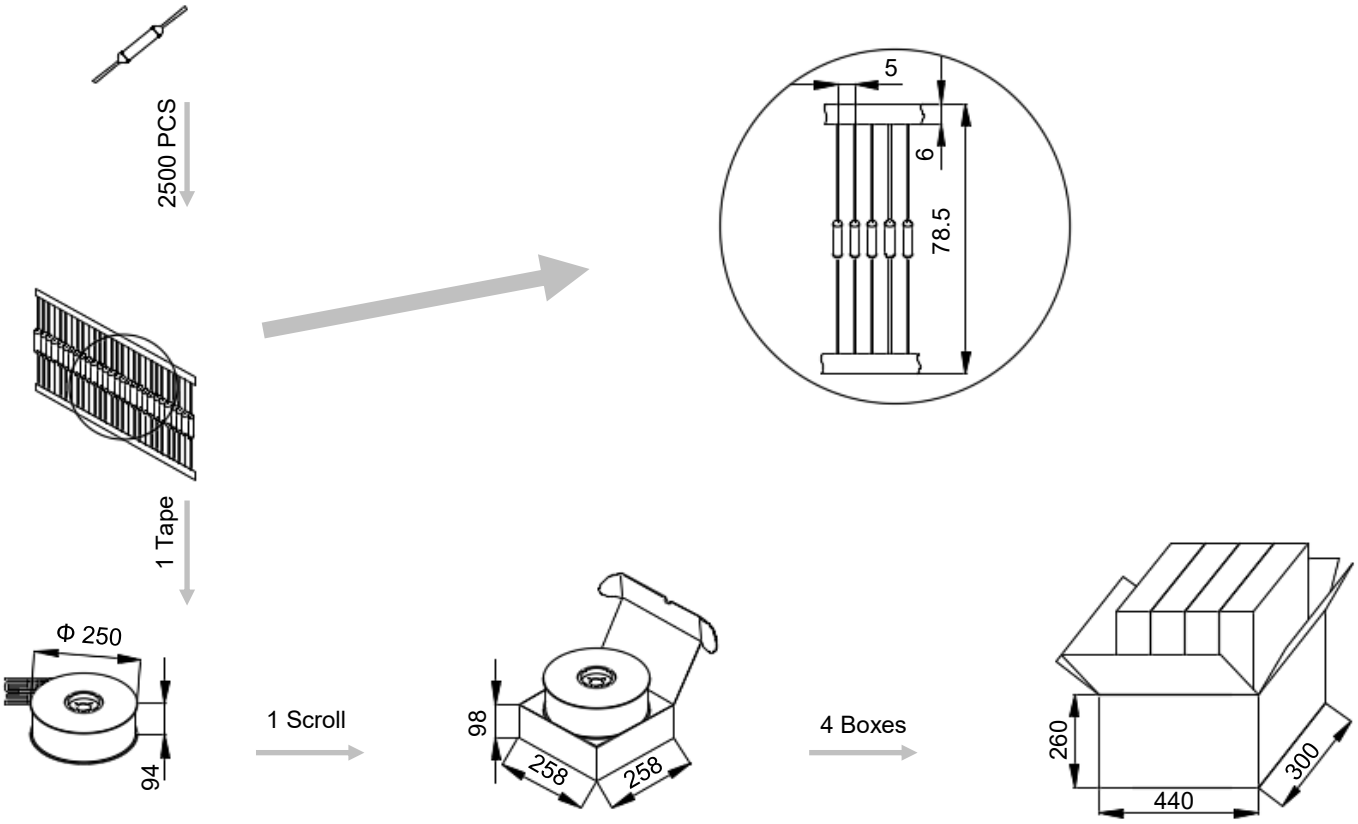

All Rights Reserved by Xiamen SET Electronics Co., Ltd. 2024-2026 V1.1

Part Numbering System

ATCO - V 2 - A N N A B - 001

Other Options

Packing

B	Bulk
T	Taping

Leads Forming

A	Straight Lead
B	Single Lead Bending
C	Leads Bending
D	Leads Kinking
E	Leads Bending and Kinking

Color of Insulation Tube

W	White
Y	Yellow
R	Red
K	Black
N	None

Insulation Tube Material

T	Teflon
P	Polyester
N	None

Lead Wire Type

A	Tinned Copper Wire
B	Tinned Copper Plated Wire

Rated Functioning Temp.

2	115 °C, See Specifications

Series

V	Series See Specifications

Product Category

ATCO	Alloy Thermal-Link

All Rights Reserved by Xiamen SET Electronics Co., Ltd. 2024-2026 V1.1

Thermal-Link (ATCO)-Alloy Type

H Series

Description

Alloy Thermal-Link / Alloy Thermal Cutoff (ATCO) is defined as a non-resettable protective device functioning one time only. It is widely used in electrical equipment. ATCO is mainly consist of fusible alloy, flux resin, case, sealant and lead wires. Normally, fusible alloy is jointed to the two lead wires. Under abnormal conditions, when the temp. reaches to the fusing temp. of ATCO, the fusible alloy melts and quickly retracts to the two lead wire ends with the aid of the flux resin and disconnects the circuit completely.

SETsafe | SETfuse Alloy Thermal-Link (ATCO) H series Rated Functioning Temp. from 76 ℃ to 221 ℃, Rated Current: 2 A, safety certification Includes UL, cUL, TUV, PSE, KC, CCC, and complies with RoHS and REACH.

Features

- Non-Resettable
- High Accuracy of Functioning Temp.
- RoHS & REACH Compliant

Applications

- Lamps
- Switched-Mode Power Supplies
- Home Electrical Appliances
- Transformers
- Motors
- Batteries

Customization

- Other Temp.
- The Length of Lead Wires
- Taping Packing Available
- Lead Wires can be Insulated
- Tinned Copper Wires or CP Wires
- Leads Forming Types

Structure Diagrams

Axial

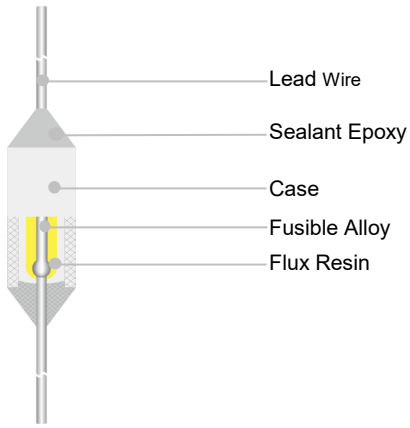

Marking

Axial (Color for reference only)

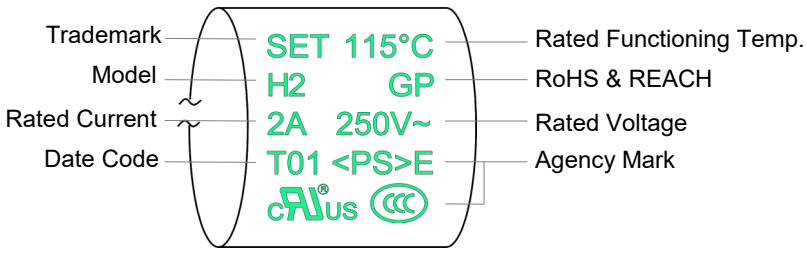

Remark: The first letter of the Date Code Year/quarter A stands for 2000, B stands for 2001, 01 stands for the first quarter, 02 stands for the second quarter, and so on.

Dimensions (mm)

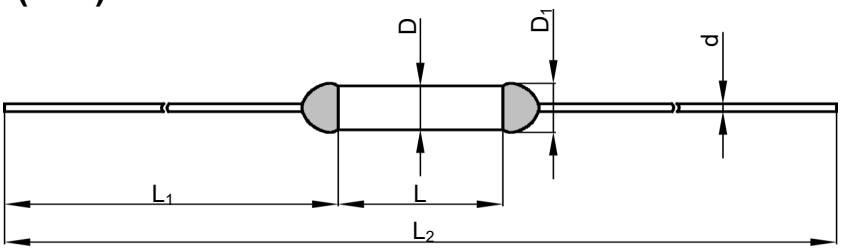

L	L_1	L_2	D	D_1	d
9.0 ± 0.5	35.0 ± 2.0	79.0 ± 3.0	2.5 ± 0.5	≤ 3.0	0.54 ± 0.05

All Rights Reserved by Xiamen SET Electronics Co., Ltd. 2024-2026 V1.1

Specifications

Rated Functioning Temp. (T_f) °C

	Model	Fusing Temp. (°C)	T_h (°C)	T_m (°C)	I_r (A)	U_r (V)	UL	cUL	TUV	PSE	KC	CCC	RoHS REACH
221	H31	218 ± 2	188	250	2	AC 250	●	●	●	●	○	●	●
						AC 125	●	●	○	●	○	○	●
						DC 60	●	●	●	○	○	●	●
205	H32	199 ± 3	169	250	2	AC 250	○	○	●	●	○	●	●
						AC 125	●	●	○	●	○	○	●
						DC 60	●	●	●	○	○	●	●
187	H17	182± 3	162	250	2	AC 250	●	●	●	●	●	●	●
						DC 60	●	●	●	○	○	○	●
160	H16	154 ± 2	135	200	2	AC 250	○	○	●	●	○	●	●
						DC 60	○	○	●	○	○	●	●
150	H7	145 ± 2	126	200	2	AC 250	●	●	●	●	●	●	●
						DC 50	●	●	○	○	○	○	●
145	H6	140 ± 2	121	200	2	AC 250	●	●	●	●	●	●	●
						DC 50	●	●	○	○	○	○	●
139	H13	135 ± 2	115	200	2	AC 250	●	●	●	●	●	●	●
						DC 50	●	●	○	○	○	○	●
136	H9	131 ± 2	112	200	2	AC 250	●	●	●	●	●	●	●
						DC 50	●	●	○	○	○	○	●
135	H5	130 ± 2	111	200	2	AC 250	●	●	●	●	●	●	●
						DC 50	●	●	○	○	○	○	●
133	H8	130 ± 2	111	200	2	AC 250	●	●	●	●	●	●	●
						DC 50	●	●	○	○	○	○	●
130	H4	125 ± 2	106	200	2	AC 250	●	●	●	●	●	●	●
						DC 50	●	●	○	○	○	○	●
125	H3	121 ± 2	100	200	2	AC 250	●	●	●	●	●	●	●
						DC 60	●	●	○	○	○	○	●
115	H2	111 ± 2	91	200	2	AC 250	●	●	●	●	●	●	●
						DC 50	●	●	○	○	○	○	●
102	H1	98 ± 3	79	200	2	AC 250	○	○	●	●	●	●	●
						AC 125	●	●	○	●	○	○	●
						DC 50	●	●	○	○	○	○	●
97	H21	92 ± 3	70	200	2	AC 250	○	○	○	●	○	○	●
						AC 125	●	●	○	●	○	○	●
						DC 50	●	●	○	○	○	○	●
86	H18	81 ± 3	61	200	2	AC 250	○	○	●	●	●	●	●
						AC 125	●	●	○	●	○	○	●
						DC 50	●	●	○	○	○	○	●
76	H0	73 ± 2	53	200	2	AC 250	○	○	●	●	●	●	●
						AC 125	●	●	○	●	○	○	●
						DC 50	●	●	○	○	○	○	●

Note:

1: "●"Means certificated, "○"Means non-certificated, RoHS & REACH Compliant .

2: " * "Customizable DC voltage.

All Rights Reserved by Xiamen SET Electronics Co., Ltd. 2024-2026 V1.1

Agency Information

Institution	Standards	The File No. and certification No. obtained by SETsafe | SETfuse
	UL 60691	E214712
	CAN-CSA-E60691	E214712
	EN 60691	R50259420
	J60691	JET2121-32001-2021、JET2121-32001-2022 JET2121-32001-2023、JET2121-32001-2024 JET2121-32001-2025、JET2121-32001-2026 JET2121-32001-2027、JET2121-32001-2028
	K60691	SU05023-11001、SU05023-11002 SU05023-11003
	GB 9816.1	2020980205000186

Soldering

Hand-Soldering

1. Soldering should be carried out according to Table H-1.
2. The thermal element of ATCO is fusible alloy with low melting point, which is jointed with ATCO lead wires. Improper soldering operation (too high soldering temp. , too long soldering time, too short lead wire etc.) may transfer more heat to the thermal element and ATCO may open in advance.
3. When soldering conditions are more severe than those listed in Table H-1, a heat sink fixture should be used between soldering point and ATCO body.
4. When soldering, please do not pull / push or twist ATCO body or lead wires.
5. After soldering, let it naturally cool for longer than 20 seconds. During cooling, never move the ATCO body or lead wires.

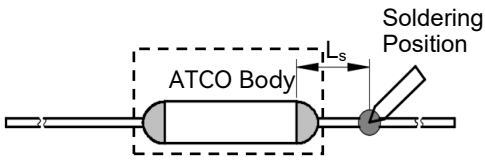

FIGURE H-1

TABLE H-1 Hand-Soldering Time

Rated Functioning Temp. (T_f)	Max. Allowable Soldering Time for Different Lead Wire Length (Fig.H-1)									Max. Soldering Temp.
	L_s Length	Time		L_s Length	Time		L_s Length	Time		
		Tinned Copper Wire	CP Wire		Tinned Copper Wire	CP Wire		Tinned Copper Wire	CP Wire	
(°C)	(mm)	(s)	(s)	(mm)	(s)	(s)	(mm)	(s)	(s)	(°C)
76 to 101	10	1[a]	4	20	2	5	30	3	6	400
102 to 115	10	1[a]	4	20	2	5	30	3	6	
116 to 135	10	1[a]	4	20	3	6	30	5	8	
136 to 150	10	3	6	20	5	8	30	5	8	
151 to 221	10	4	7	20	6	9	30	7	10	

Note:
a: Auxiliary Heat Sink Fixture is Required to Avoid ATCO Cutting off Unexpectedly.

All Rights Reserved by Xiamen SET Electronics Co., Ltd. 2024-2026 V1.1

Wave Soldering

The wave soldering parameters as Table H-2, for reference only, when ATCO is for practice use, you need to do some validation experiments. For example, using X-RAY to see the fusible alloy of ATCO whether damage after wave soldering.

TABLE H-2 Wave Soldering Parameters Setting

Rated Functioning Temp. (T_f)	Max. Allowable Preheating Temp. When the Length of Lead Wire is Different (Fig.H-1)				Preheating Time (t_1)	Max. Wave Soldering Temp.	Dwelling Time (t_2)	Cooling Time (t_3)
	L_s Length	Preheating Temp.	L_s Length	Preheating Temp.				
(°C)	(mm)	(°C)	(mm)	(°C)	(s)	(°C)	(s)	(s)
76 to 130	Recommend Hand-Soldering							
131 to 150	20	80	30	90	< 60	≤ 260	≤ 3	≤ 10
151 to 221	20	90	30	100	< 60	≤ 260	≤ 3	≤ 10

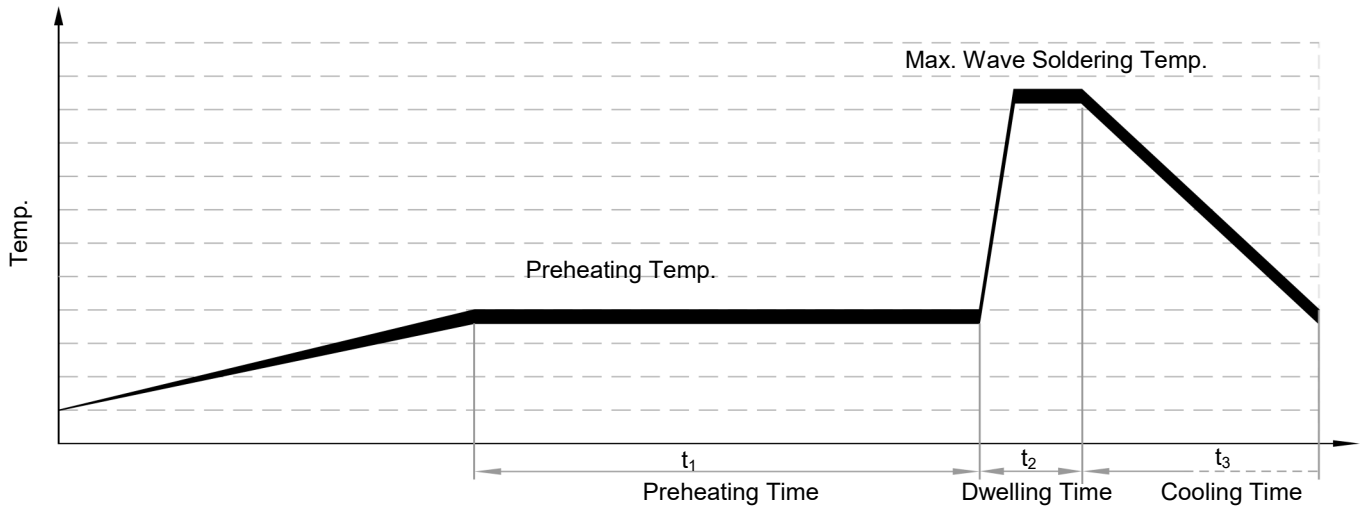

All Rights Reserved by Xiamen SET Electronics Co., Ltd. 2024-2026 V1.1

Product Temp.-Time Curve (Reference)

The Temp.-Time Curve of Thermal-Link in different temp. oil bath.

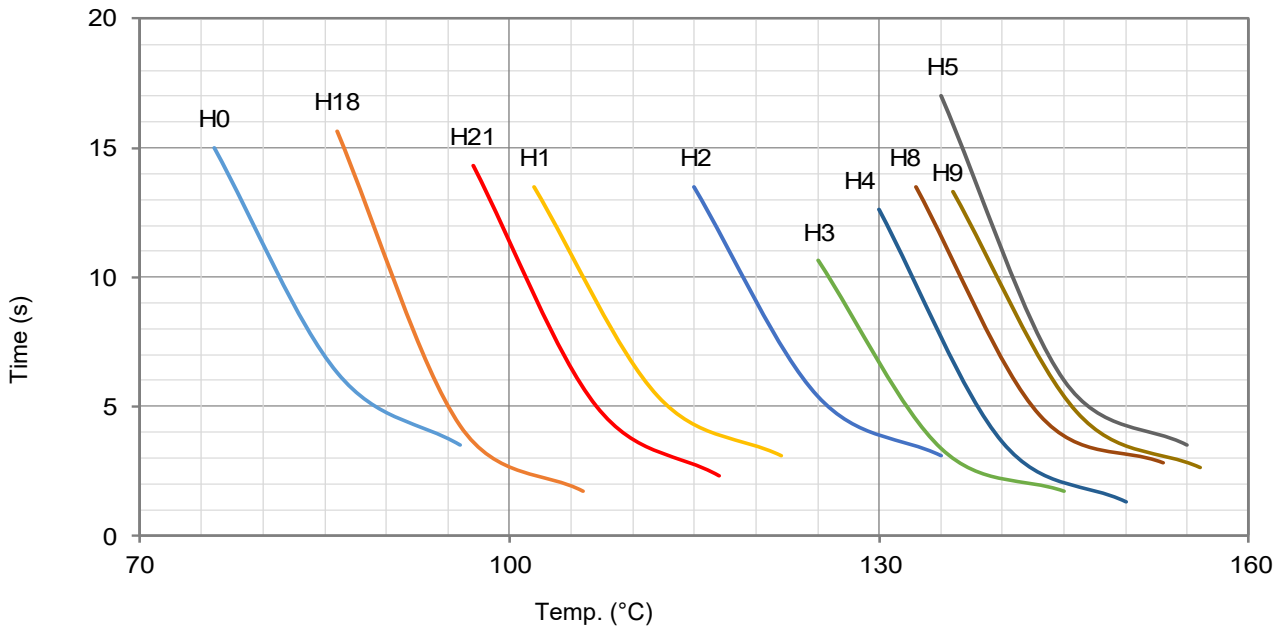

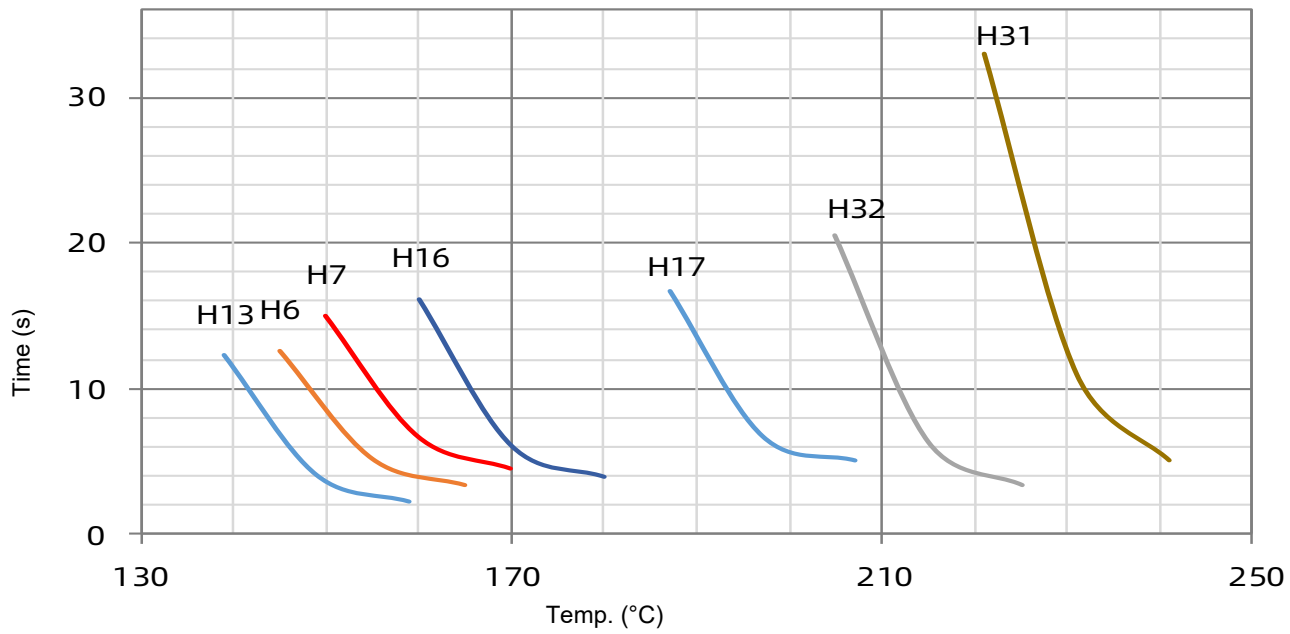

All Rights Reserved by Xiamen SET Electronics Co., Ltd. 2024-2026 V1.1

Product Current-Time Curve (Reference)

The Current-Time Curve shows functioning time at multi-times rated current at room temperature 25 ± 2 °C.

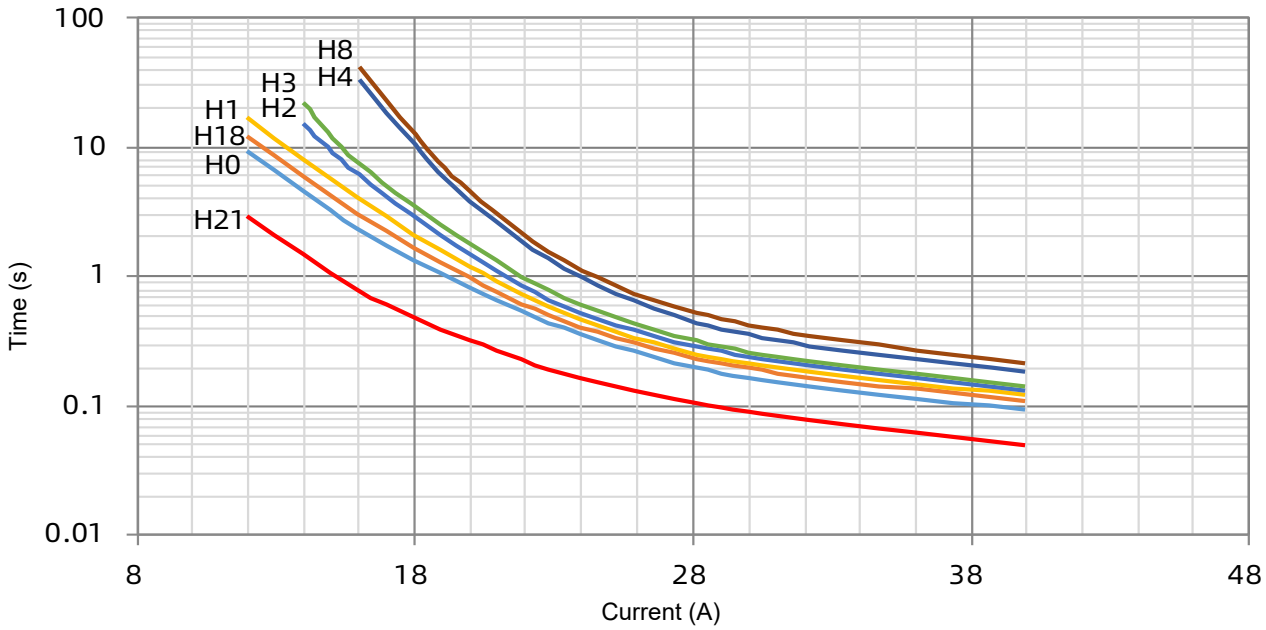

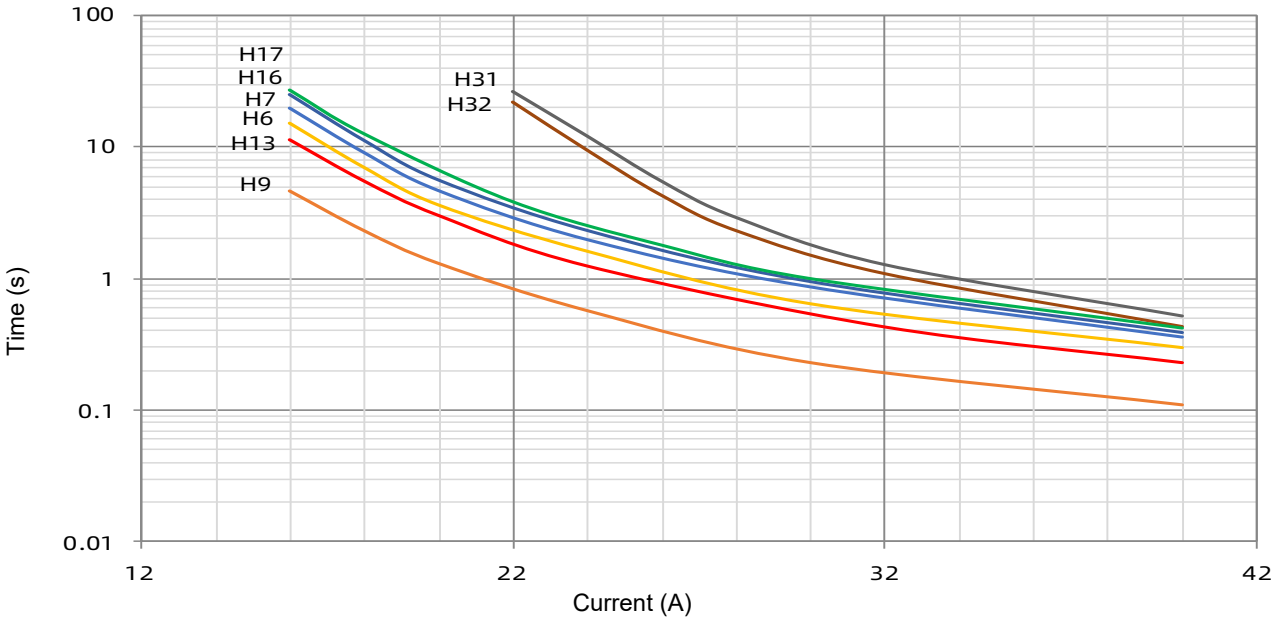

All Rights Reserved by Xiamen SET Electronics Co., Ltd. 2024-2026 V1.1

Packaging Information

Bulk

Item	PE Bag	PE Bag	Carton
Dimensions (mm)	135 × 85	190 × 180	440 × 300 × 260
Quantity (PCS)	100	1000	50000
Gross Weight (kg)			20.0 ± 10%

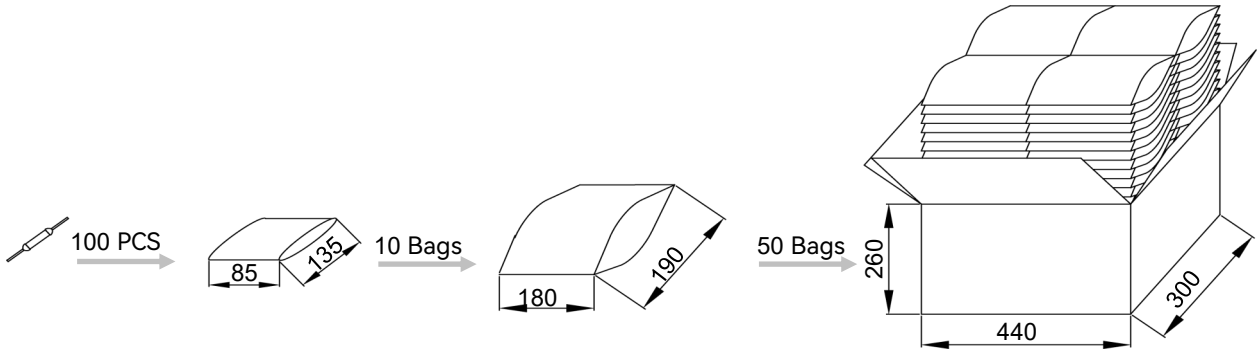

Taping

Item	**Scroll**	Box	Carton
Dimensions (mm)	Φ 250 × 94	258 × 258 × 98	480 × 300 × 260
Quantity (PCS)	2500	2500	10000
Gross Weight (kg)			5.0 ± 10%

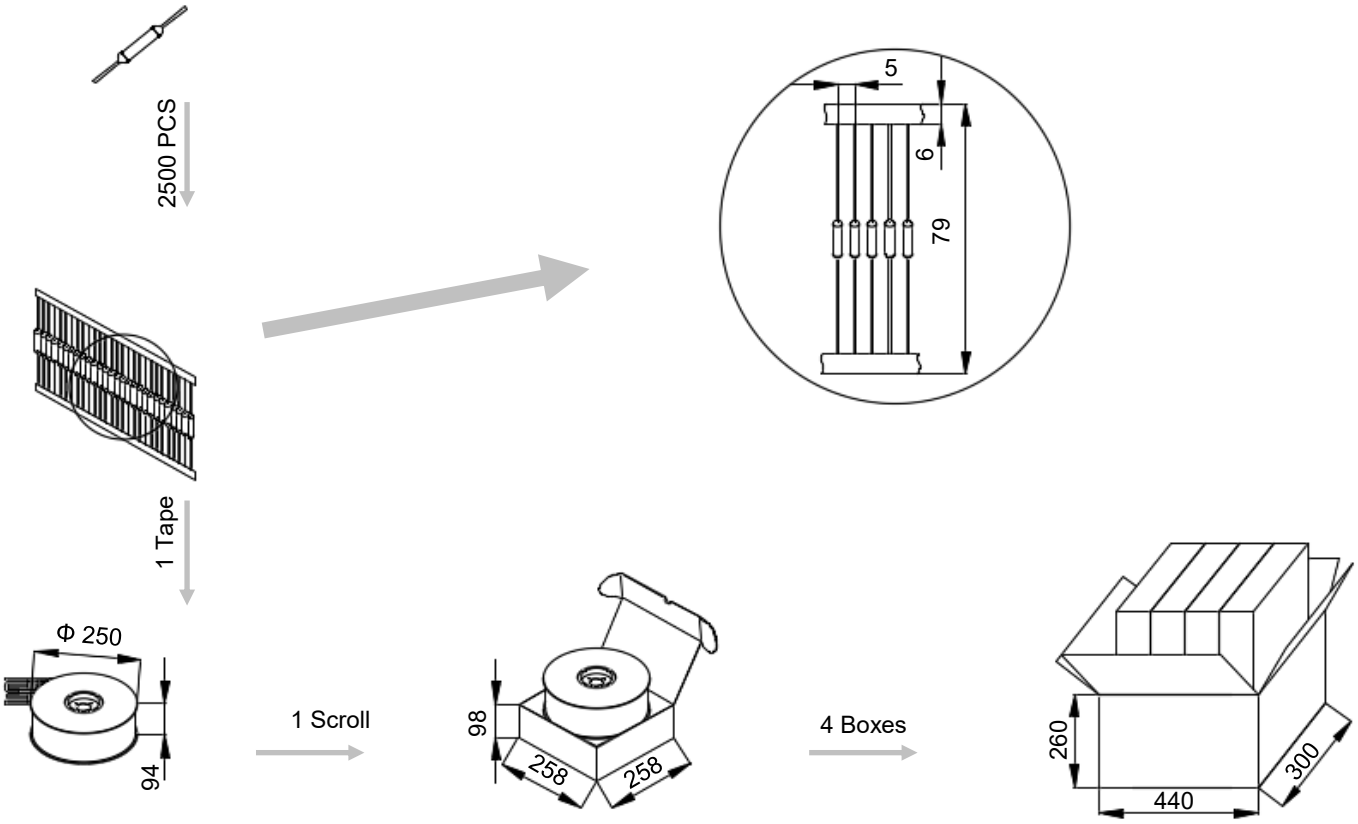

All Rights Reserved by Xiamen SET Electronics Co., Ltd. 2024-2026 V1.1

Part Numbering System

ATCO - H 2 - A N N A B - 001

Other Options

Packing

B	Bulk
T	Taping

Leads Forming

A	Straight Lead
B	Single Lead Bending
C	Leads Bending
D	Leads Kinking
E	Leads Bending and Kinking

Color of Insulation Tube

W	White
Y	Yellow
R	Red
K	Black
N	None

Insulation Tube Material

T	Teflon
P	Polyester
N	None

Lead Wire Type

A	Tinned Copper Wire
B	Tinned Copper Plated Wire

Rated Functioning Temp.

2	115 °C, See Specifications

Series

H	Series See Specifications

Product Category

ATCO	Alloy Thermal-Link

All Rights Reserved by Xiamen SET Electronics Co., Ltd. 2024-2026 V1.1

Thermal-Link (ATCO)-Alloy Type

B Series

Description

Alloy Thermal-Link / Alloy Thermal Cutoff (ATCO) is defined as a non-resettable protective device functioning one time only. It is widely used in electrical equipment. ATCO is mainly consist of fusible alloy, flux resin, case, sealant and lead wires. Normally, fusible alloy is jointed to the two lead wires. Under abnormal conditions, when the temp. reaches to the fusing temp. of ATCO, the fusible alloy melts and quickly retracts to the two lead wire ends with the aid of the flux resin and disconnects the circuit completely.

SETsafe | SETfuse Alloy Thermal-Link (ATCO) B series Rated Functioning Temp. from 76 ℃ to 221 ℃, Rated Current: 3 A, safety certification Includes UL, cUL, TUV, PSE, KC, CCC, and complies with RoHS and REACH.

Features

- Non-Resettable
- High Accuracy of Functioning Temp.
- RoHS & REACH Compliant

Applications

- Lamps
- Switched-Mode Power Supplies
- Home Electrical Appliances
- Transformers
- Motors
- Batteries

Customization

- Other Temp.
- The Length of Lead Wires
- Taping Packing Available
- Lead Wires can be Insulated
- Tinned Copper Wires or CP Wires
- Leads Forming Types

Structure Diagrams

Axial

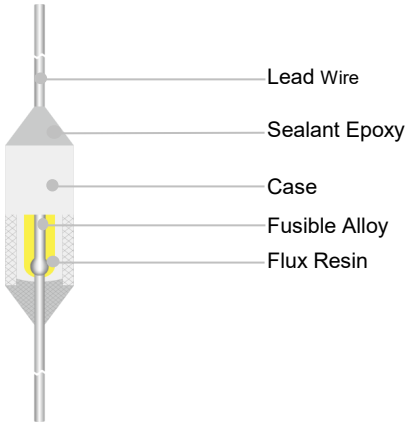

Marking

Axial (Color for reference only)

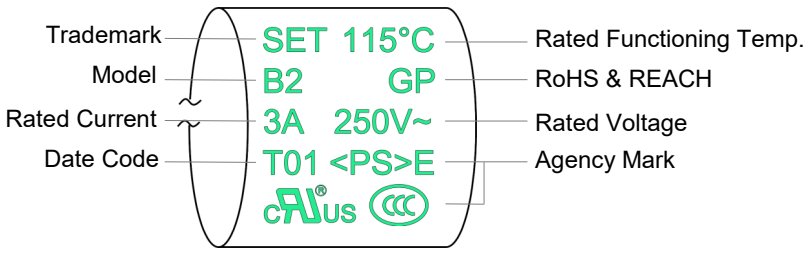

Remark: The first letter of the Date Code Year/quarter A stands for 2000, B stands for 2001, 01 stands for the first quarter, 02 stands for the second quarter, and so on.

Dimensions (mm)

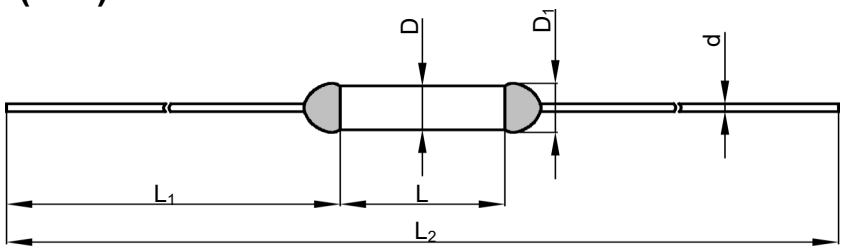

L	L_1	L_2	D	D_1	d
9.0 ± 0.5	35.0 ± 2.0	79.0 ± 3.0	2.5 ± 0.5	≤ 3.0	0.54 ± 0.05

All Rights Reserved by Xiamen SET Electronics Co., Ltd. 2024-2026 V1.1

Specifications

Rated Functioning Temp. (T_f) °C

	Model	Fusing Temp. (°C)	T_h (°C)	T_m (°C)	I_r (A)	U_r (V)	UL	cUL	TUV	PSE	KC	CCC	RoHS REACH
221	B31	218 ± 2	188	250	3	AC 250	●	●	●	●	○	●	●
						AC 125	●	●	○	●	○	○	●
						DC 60	●	●	●	○	○	○	●
205	B32	199 ± 3	169	250	3	AC 250	○	○	●	●	○	●	●
						AC 125	●	●	○	●	○	○	●
						DC 60	●	●	●	○	○	○	●
187	B17	182 ± 3	162	250	3	AC 250	●	●	●	●	●	●	●
						DC 60	●	●	●	○	○	○	●
160	B16	154 ± 2	135	200	3	AC 250	○	○	●	●	○	●	●
						DC 60	○	○	●	○	○	○	●
150	B7	145 ± 2	126	200	3	AC 250	●	●	●	●	●	●	●
						DC 50	●	●	○	○	○	○	●
145	B6	140 ± 2	121	200	3	AC 250	●	●	●	●	●	●	●
						DC 50	●	●	○	○	○	○	●
139	B13	135 ± 2	115	200	3	AC 250	●	●	●	●	●	●	●
						DC 50	●	●	○	○	○	○	●
136	B9	131 ± 2	112	200	3	AC 250	●	●	●	●	●	●	●
						DC 50	●	●	○	○	○	○	●
135	B5	130 ± 2	111	200	3	AC 250	●	●	●	●	●	●	●
						DC 50	●	●	○	○	○	○	●
133	B8	130 ± 2	111	200	3	AC 250	●	●	●	●	●	●	●
						DC 50	●	●	○	○	○	○	●
130	B4	125 ± 2	106	200	3	AC 250	●	●	●	●	●	●	●
						DC 50	●	●	○	○	○	○	●
125	B3	121 ± 2	100	200	3	AC 250	●	●	●	●	●	●	●
						DC 50	●	●	○	○	○	○	●
115	B2	111 ± 2	91	200	3	AC 250	●	●	●	●	●	●	●
						DC 50	●	●	○	○	○	○	●
102	B1	98 ± 3	79	200	3	AC 250	○	○	●	●	●	●	●
						AC 125	●	●	○	●	○	○	●
						DC 50	●	●	○	○	○	○	●
97	B21	92 ± 3	70	200	3	AC 250	○	○	○	●	○	○	●
						AC 125	●	●	○	●	○	○	●
						DC 50	●	●	○	○	○	○	●
86	B18	81 ± 3	61 58[a]	200	3	AC 250	○	○	●	●	●	●	●
						AC 125	●	●	○	●	○	○	●
						DC 50	●	●	○	○	○	○	●
76	B0	73 ± 2	53	200	3	AC 250	○	○	●	●	●	●	●
						AC 125	●	●	○	●	○	○	●
						DC 50	●	●	○	○	○	○	●

Note:

1: "●"Means certificated, "○"Means non-certificated, RoHS & REACH Compliant .

2: " * "Customizable DC voltage.

3: " a ": The temperature measurement point for holding temperature (T_h) shall be positioned 50 mm away from the product body, in accordance with the requirements specified in Appendix H.11.2 of IEC 60691:2015 and Appendix I of GB/T 9816.1-2023.

All Rights Reserved by Xiamen SET Electronics Co., Ltd. 2024-2026 V1.1

Agency Information

Institution	Standards	The File No. and certification No. obtained by SETsafe | SETfuse
	UL 60691	E214712
	CAN-CSA-E60691	E214712
	EN 60691	R50259434
	J60691	JET2121-32001-2021、JET2121-32001-2022 JET2121-32001-2023、JET2121-32001-2024 JET2121-32001-2025、JET2121-32001-2026 JET2121-32001-2027、JET2121-32001-2028
	K60691	SU05023-11001、SU05023-11002 SU05023-11003
	GB 9816.1	2020980205000186

Soldering

Hand-Soldering

1. Soldering should be carried out according to Table B-1.
2. The thermal element of ATCO is fusible alloy with low melting point, which is jointed with ATCO lead wires. Improper soldering operation (too high soldering temp. , too long soldering time, too short lead wire etc.) may transfer more heat to the thermal element and ATCO may open in advance.
3. When soldering conditions are more severe than those listed in Table B-1, a heat sink fixture should be used between soldering point and ATCO body.
4. When soldering, please do not pull / push or twist ATCO body or lead wires.
5. After soldering, let it naturally cool for longer than 20 seconds. During cooling, never move the ATCO body or lead wires.

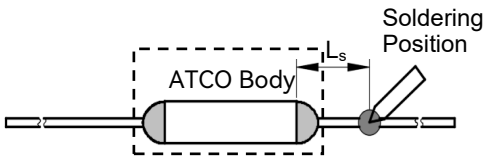

FIGURE B-1

TABLE B-1 Hand-Soldering Time

Rated Functioning Temp. (T_f)	Max. Allowable Soldering Time for Different Lead Wire Length (Fig.B-1)									Max. Soldering Temp.
	L_s Length	Time		L_s Length	Time		L_s Length	Time		
		Tinned Copper Wire	CP Wire		Tinned Copper Wire	CP Wire		Tinned Copper Wire	CP Wire	
(°C)	(mm)	(s)	(s)	(mm)	(s)	(s)	(mm)	(s)	(s)	(°C)
76 to 101	10	1[a]	4	20	2	5	30	3	6	400
102 to 115	10	1[a]	4	20	2	5	30	3	6	
116 to 135	10	1[a]	4	20	3	6	30	5	8	
136 to 150	10	3	6	20	5	8	30	5	8	
151 to 221	10	4	7	20	6	9	30	7	10	

Note:
a: Auxiliary Heat Sink Fixture is Required to Avoid ATCO Cutting off Unexpectedly.

All Rights Reserved by Xiamen SET Electronics Co., Ltd. 2024-2026 V1.1

Wave Soldering

The wave soldering parameters as Table B-2, for reference only, when ATCO is for practice use, you need to do some validation experiments. For example, using X-RAY to see the fusible alloy of ATCO whether damage after wave soldering.

TABLE B-2 Wave Soldering Parameters Setting

Rated Functioning Temp. (T_f)	Max. Allowable Preheating Temp. When the Length of Lead Wire is Different (Fig.B-1)				Preheating Time (t_1)	Max. Wave Soldering Temp.	Dwelling Time (t_2)	Cooling Time (t_3)
	L_s Length	Preheating Temp.	L_s Length	Preheating Temp.				
(°C)	(mm)	(°C)	(mm)	(°C)	(s)	(°C)	(s)	(s)
76 to 130	Recommend Hand-Soldering							
131 to 150	20	80	30	90	< 60	≤ 260	≤ 3	≤ 10
151 to 221	20	90	30	100	< 60	≤ 260	≤ 3	≤ 10

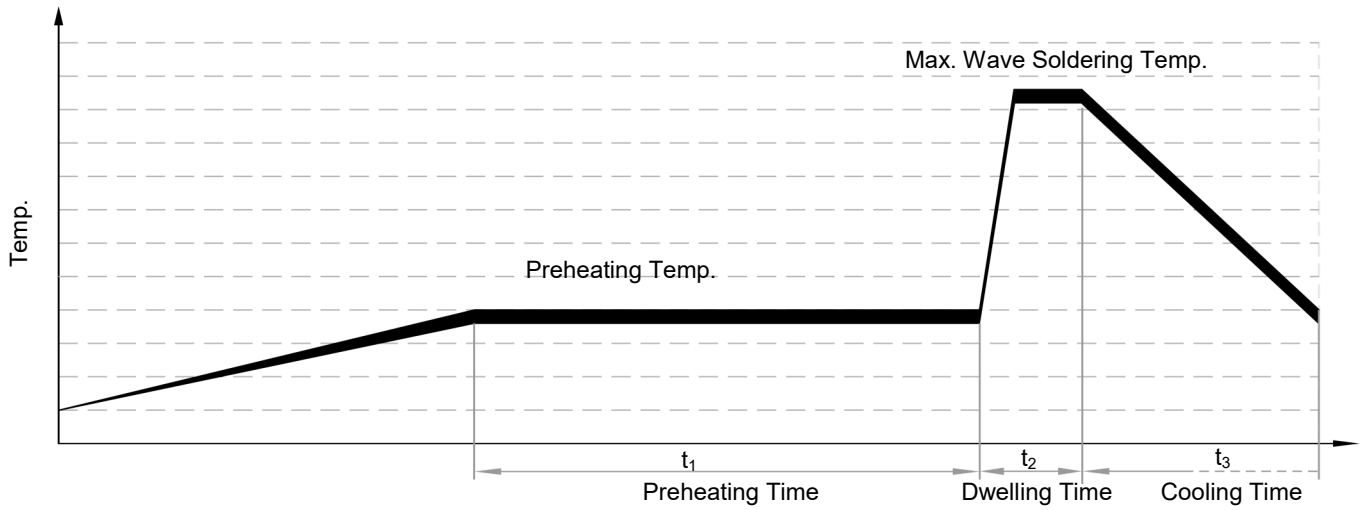

All Rights Reserved by Xiamen SET Electronics Co., Ltd. 2024-2026 V1.1

Product Temp.-Time Curve (Reference)

The Temp.-Time Curve of Thermal-Link in different temp. oil bath.

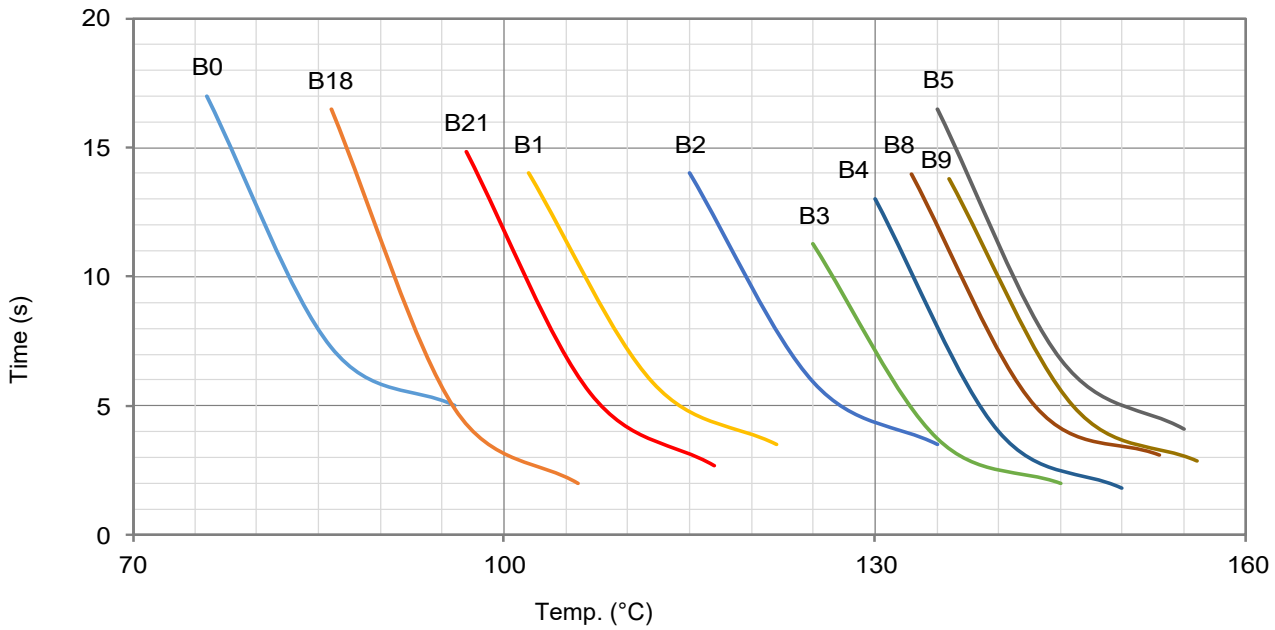

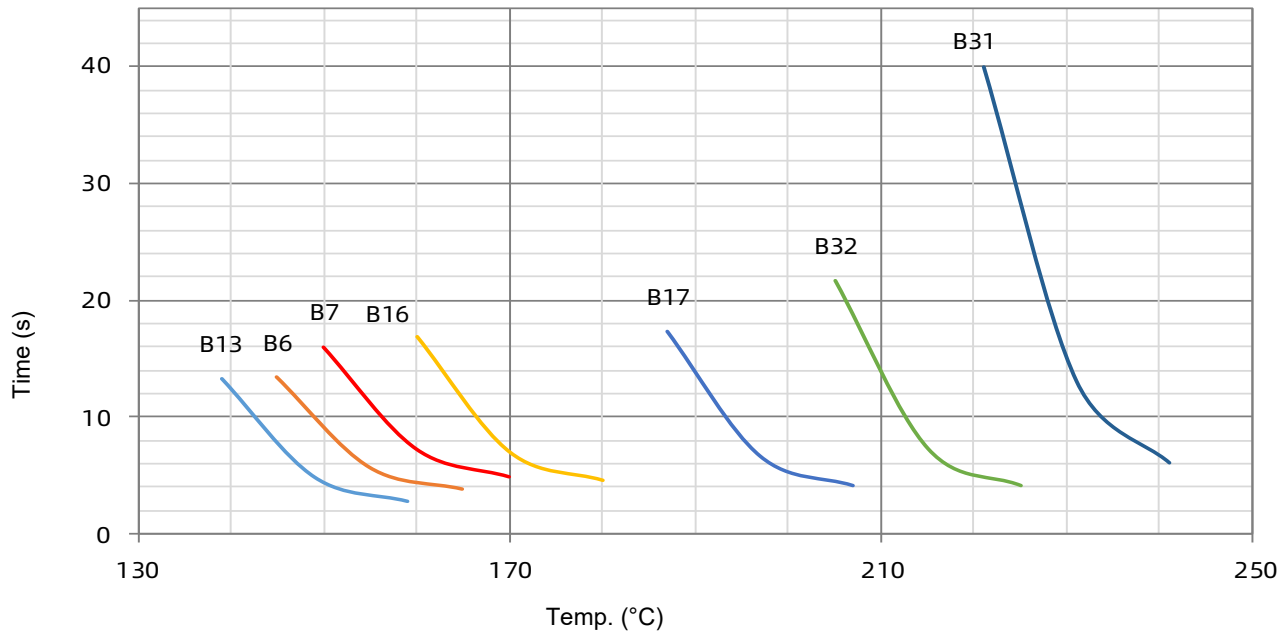

All Rights Reserved by Xiamen SET Electronics Co., Ltd. 2024-2026 V1.1

Product Current-Time Curve (Reference)

The Current-Time Curve shows functioning time at multi-times rated current at room temperature 25 ± 2 °C.

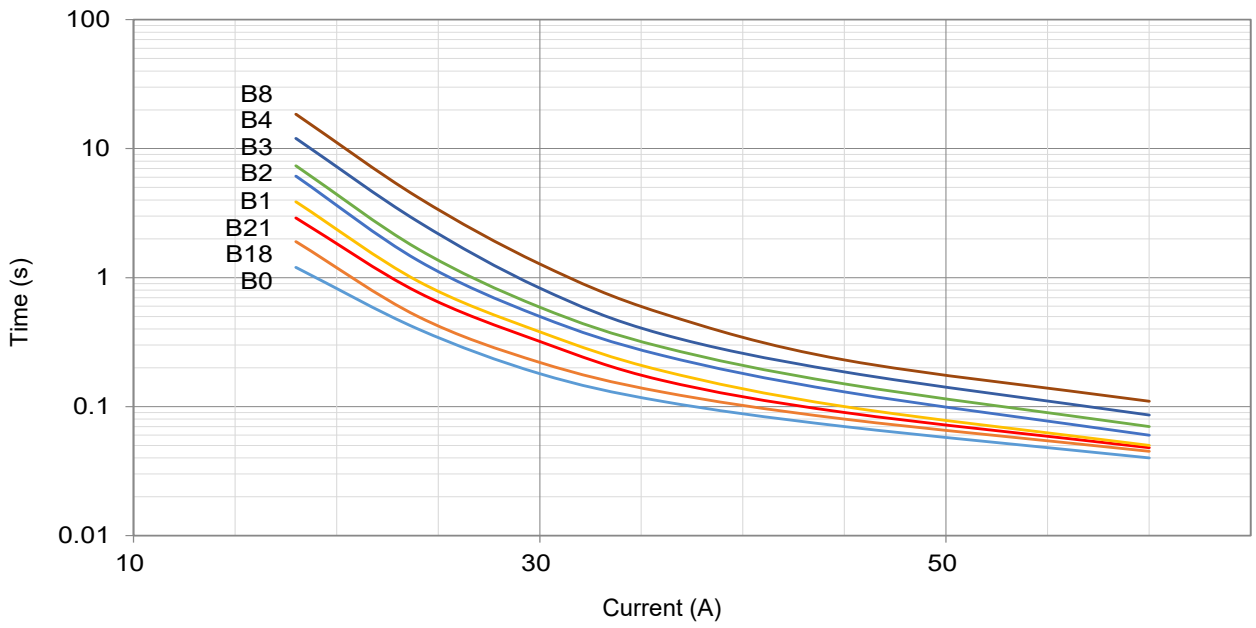

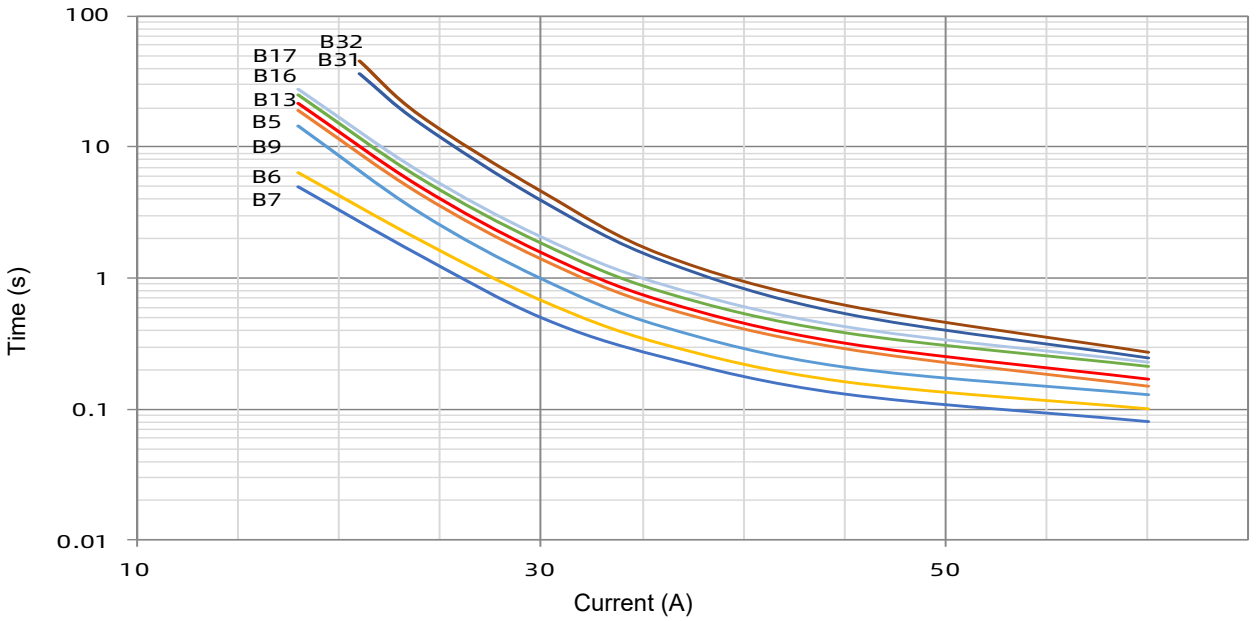

All Rights Reserved by Xiamen SET Electronics Co., Ltd. 2024-2026 V1.1

Packaging Information

Bulk

Item	PE Bag	PE Bag	Carton
Dimensions (mm)	135 × 85	190 × 180	440 × 300 × 260
Quantity (PCS)	100	1000	40000
Gross Weight (kg)			15.0 ± 10%

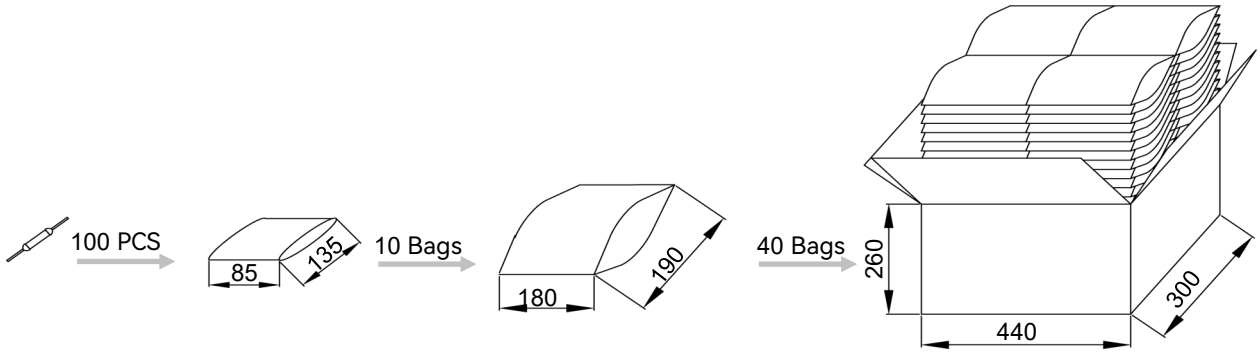

Taping

Item	**Scroll**	Box	Carton
Dimensions (mm)	Φ 250 × 94	258 × 258 × 98	480 × 300 × 260
Quantity (PCS)	2500	2500	10000
Gross Weight (kg)			5.6 ± 10%

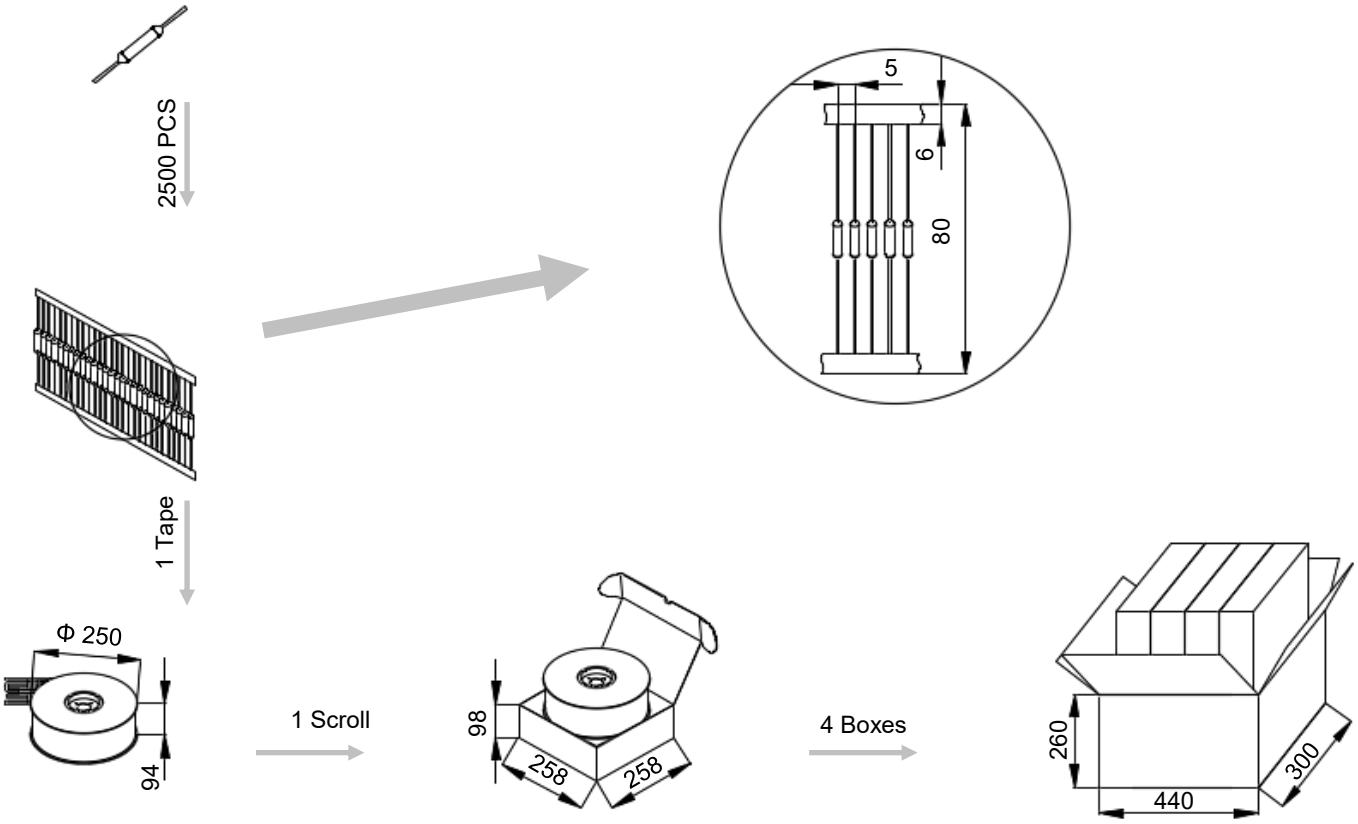

All Rights Reserved by Xiamen SET Electronics Co., Ltd. 2024-2026 V1.1

Part Numbering System

ATCO - B 2 - A N N A B - 001

Other Options

Packing

B	Bulk
T	Taping

Leads Forming

A	Straight Lead
B	Single Lead Bending
C	Leads Bending
D	Leads Kinking
E	Leads Bending and Kinking

Color of Insulation Tube

W	White
Y	Yellow
R	Red
K	Black
N	None

Insulation Tube Material

T	Teflon
P	Polyester
N	None

Lead Wire Type

A	Tinned Copper Wire
B	Tinned Copper Plated Wire

Rated Functioning Temp.

2	115 °C, See Specifications

Series

B	Series See Specifications

Product Category

ATCO	Alloy Thermal-Link

All Rights Reserved by Xiamen SET Electronics Co., Ltd. 2024-2026 V1.1

Thermal-Link (ATCO)-Alloy Type

Description

Alloy Thermal-Link / Alloy Thermal Cutoff (ATCO) is defined as a non-resettable protective device functioning one time only. It is widely used in electrical equipment. ATCO is mainly consist of fusible alloy, flux resin, case, sealant and lead wires. Normally, fusible alloy is jointed to the two lead wires. Under abnormal conditions, when the temp. reaches to the fusing temp. of ATCO, the fusible alloy melts and quickly retracts to the two lead wire ends with the aid of the flux resin and disconnects the circuit completely.

SETsafe | SETfuse Alloy Thermal-Link (ATCO) SF series Rated Functioning Temp. from 115 ℃ to 139 ℃, Rated Current: 3 A, 5A, safety certification Includes UL, cUL, and complies with RoHS and REACH.

Features

- Non-Resettable
- High Accuracy of Functioning Temp.
- RoHS & REACH Compliant

Applications

- Lamps
- Switched-Mode Power Supplies
- Home Electrical Appliances
- Transformers
- Motors
- Batteries

Customization

- Other Temp.
- The Length of Lead Wires
- Taping Packing Available
- Lead Wires can be Insulated
- Tinned Copper Wires or CP Wires
- Leads Forming Types

Structure Diagrams

Axial

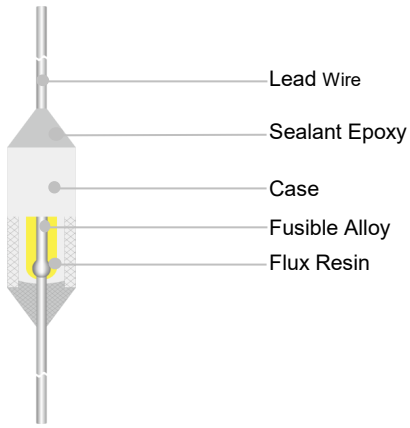

Marking

Axial (Color for reference only)

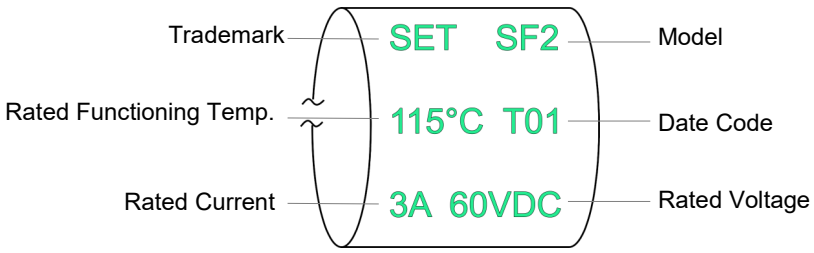

Remark: The first letter of the Date Code Year/quarter A stands for 2000, B stands for 2001, 01 stands for the first quarter, 02 stands for the second quarter, and so on.

Dimensions (mm)

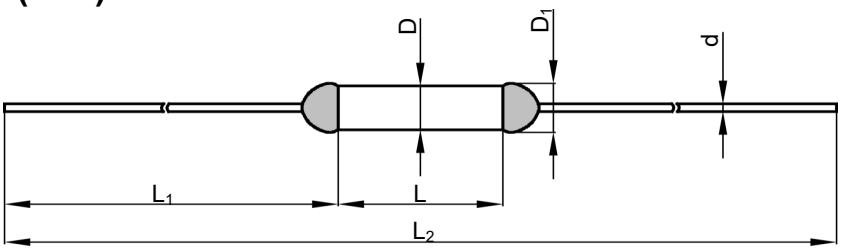

L	L_1	L_2	D	D_1	d
6.0 ± 0.5	35.0 ± 2.0	76.0 ± 3.0	1.5 ± 0.5	≤ 2.0	0.58 ± 0.05

All Rights Reserved by Xiamen SET Electronics Co., Ltd. 2024-2026 V1.1

Specifications

Rated Functioning Temp. (T_f) °C

	Model	Fusing Temp.	T_h	T_m	I_r	U_r	UL	cUL	RoHS REACH
		(°C)	(°C)	(°C)	(A)	(V)			
139	SF13	135 ± 2	85	200	5	DC 60	●	●	●
133	SF8	130 ± 2	110	200	3	DC 60	●	●	●
130	SF4	125 ± 2	95	200	3	DC 60	●	●	●
115	SF2	111 ± 2	90	200	3	DC 60	●	●	●

Note:

1: "●"Means certificated, "○"Means non-certificated, RoHS & REACH Compliant .

2: " * "Customizable DC voltage.

All Rights Reserved by Xiamen SET Electronics Co., Ltd. 2024-2026 V1.1

Agency Information

Institution	Standards	The File No. and certification No. obtained by SETsafe | SETfuse
®	UL 60691	E214712
c ®	CAN-CSA-E60691	E214712

Soldering

Hand-Soldering

1. Soldering should be carried out according to Table SF-1.
2. The thermal element of ATCO is fusible alloy with low melting point, which is jointed with ATCO lead wires. Improper soldering operation (too high soldering temp. , too long soldering time, too short lead wire etc.) may transfer more heat to the thermal element and ATCO may open in advance.
3. When soldering conditions are more severe than those listed in Table SF-1, a heat sink fixture should be used between soldering point and ATCO body.
4. When soldering, please do not pull / push or twist ATCO body or lead wires.
5. After soldering, let it naturally cool for longer than 20 seconds. During cooling, never move the ATCO body or lead wires.

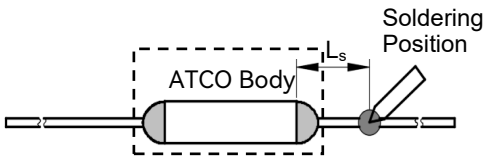

FIGURE SF-1

TABLE SF-1 Hand-Soldering Time

Rated Functioning Temp. (T_f)	Max. Allowable Soldering Time for Different Lead Wire Length (Fig.SF-1)									Max. Soldering Temp.
	L_s Length	Time		L_s Length	Time		L_s Length	Time		
		Tinned Copper Wire	CP Wire		Tinned Copper Wire	CP Wire		Tinned Copper Wire	CP Wire	
(°C)	(mm)	(s)	(s)	(mm)	(s)	(s)	(mm)	(s)	(s)	(°C)
115	10	1[a]	4	20	2	5	30	3	6	400
116 to 135	10	1[a]	4	20	3	6	30	5	8	
136 to 139	10	3	6	20	5	8	30	5	8	

Note:
a: Auxiliary Heat Sink Fixture is Required to Avoid ATCO Cutting off Unexpectedly.

All Rights Reserved by Xiamen SET Electronics Co., Ltd. 2024-2026 V1.1

Wave Soldering

The wave soldering parameters as Table SF-2, for reference only, when ATCO is for practice use, you need to do some validation experiments. For example, using X-RAY to see the fusible alloy of ATCO whether damage after wave soldering.

TABLE SF-2 Wave Soldering Parameters Setting

Rated Functioning Temp. (T_f)	Max. Allowable Preheating Temp. When the Length of Lead Wire is Different (Fig.SF-1)				Preheating Time (t_1)	Max. Wave Soldering Temp.	Dwelling Time (t_2)	Cooling Time (t_3)
	L_s Length	Preheating Temp.	L_s Length	Preheating Temp.				
(°C)	(mm)	(°C)	(mm)	(°C)	(s)	(°C)	(s)	(s)
115 to 130	Recommend Hand-Soldering							
131 to 139	20	80	30	90	< 60	≤ 260	≤ 3	≤ 10

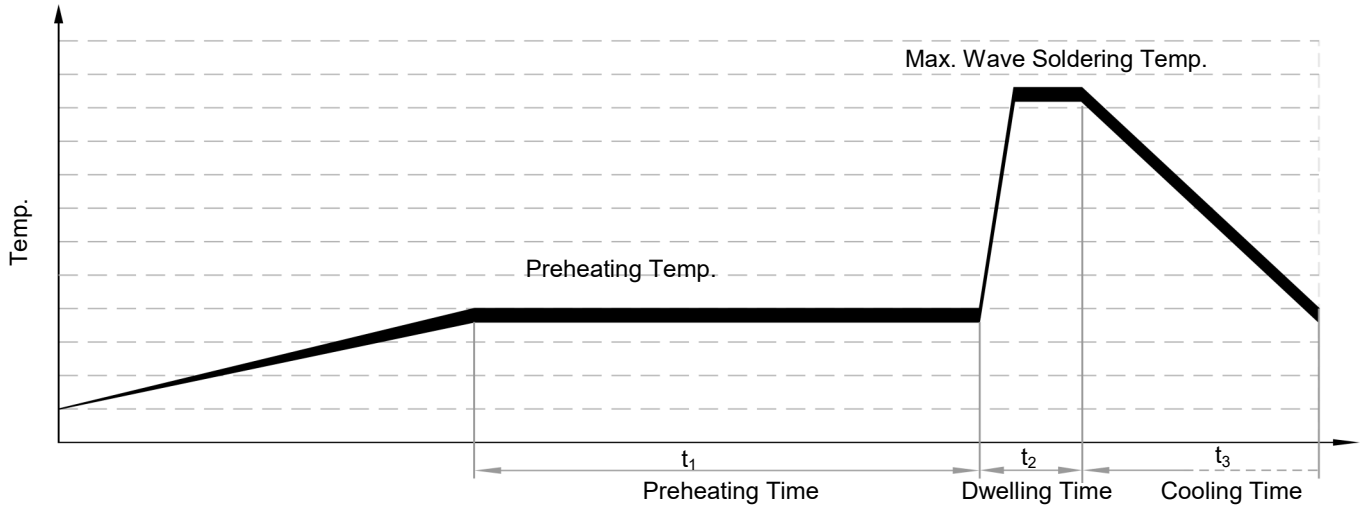

All Rights Reserved by Xiamen SET Electronics Co., Ltd. 2024-2026 V1.1

Product Temp.-Time Curve (Reference)

The Temp.-Time Curve of Thermal-Link in different temp. oil bath.

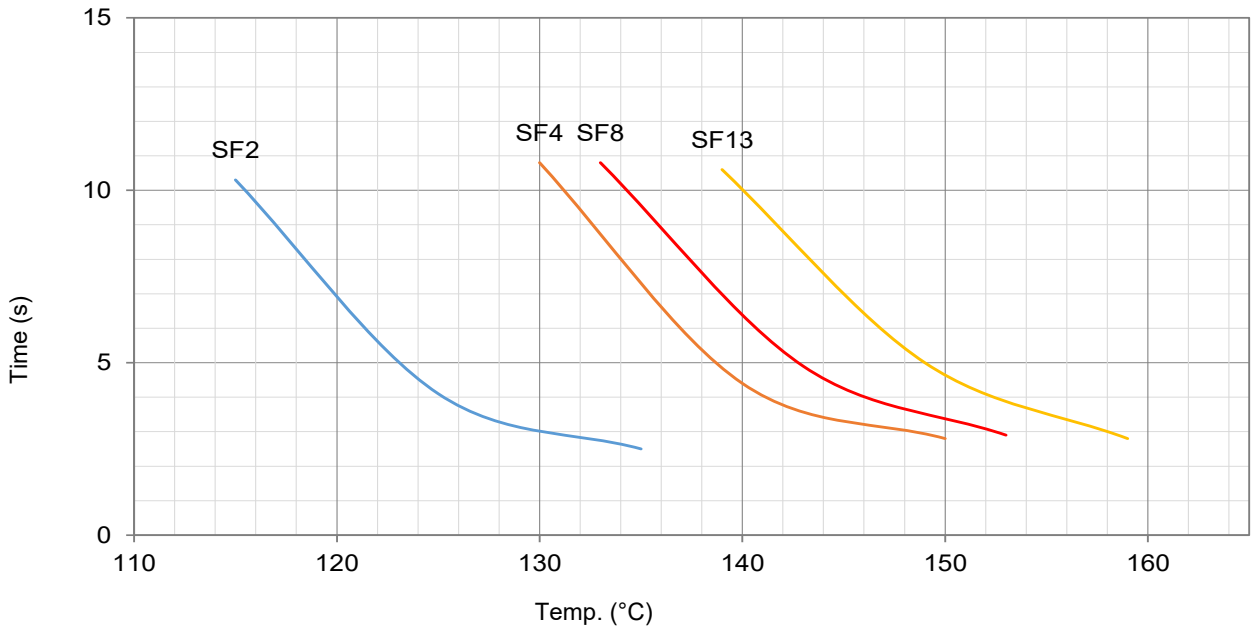

Product Current-Time Curve (Reference)

The Current-Time Curve shows functioning time at multi-times rated current at room temperature 25 ± 2 °C.

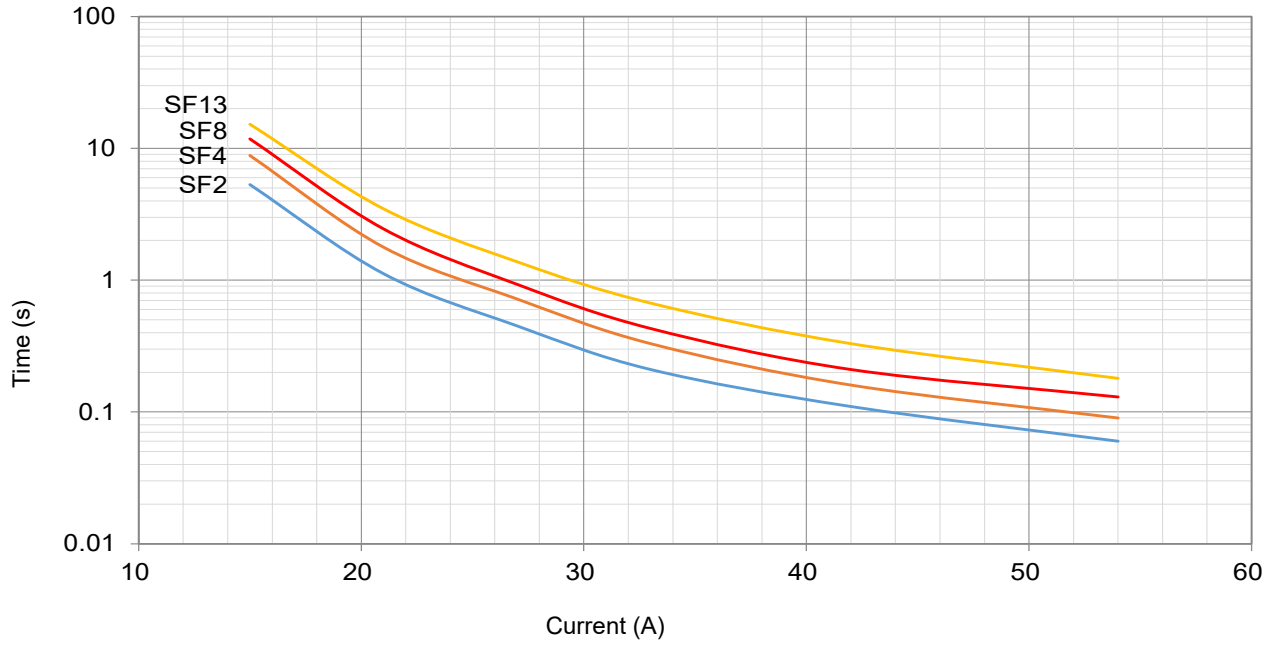

All Rights Reserved by Xiamen SET Electronics Co., Ltd. 2024-2026 V1.1

Packaging Information

Bulk

Item	PE Bag	PE Bag	Carton
Dimensions (mm)	135 × 85	190 × 180	440 × 300 × 260
Quantity (PCS)	100	1000	50000
Gross Weight (kg)			11.0 ± 10%

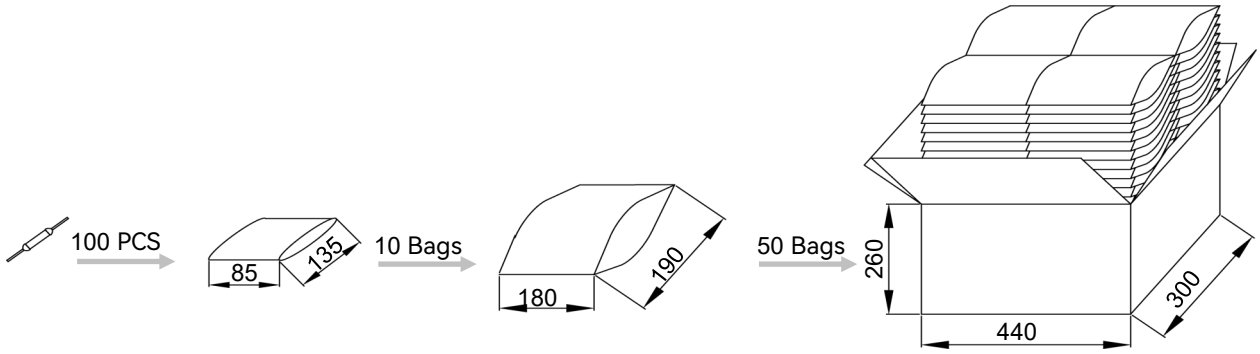

Taping

Item	**Scroll**	Box	Carton
Dimensions (mm)	Φ 250 × 94	258 × 258 × 98	480 × 300 × 260
Quantity (PCS)	2500	2500	10000
Gross Weight (kg)			12.0 ± 10%

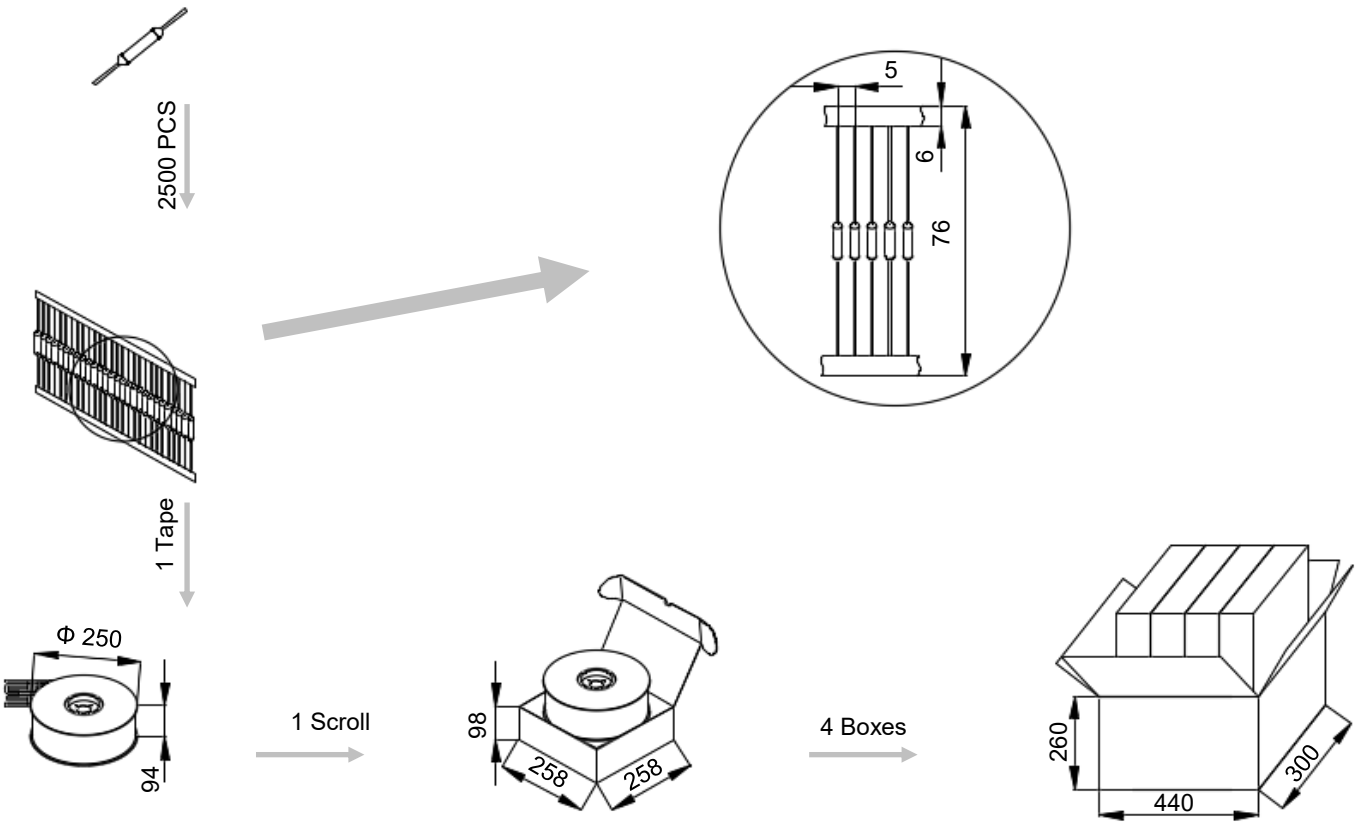

All Rights Reserved by Xiamen SET Electronics Co., Ltd. 2024-2026 V1.1

Part Numbering System

ATCO - SF 2 - A N N A B - 001

Other Options

Packing

B	Bulk
T	Taping

Leads Forming

A	Straight Lead
B	Single Lead Bending
C	Leads Bending
D	Leads Kinking
E	Leads Bending and Kinking

Color of Insulation Tube

W	White
Y	Yellow
R	Red
K	Black
N	None

Insulation Tube Material

T	Teflon
P	Polyester
N	None

Lead Wire Type

A	Tinned Copper Wire
B	Tinned Copper Plated Wire

Rated Functioning Temp.

2	115 °C, See Specifications

Series

SF	Series See Specifications

Product Category

ATCO	Alloy Thermal-Link

All Rights Reserved by Xiamen SET Electronics Co., Ltd. 2024-2026 V1.1

Thermal-Link (ATCO)-Alloy Type

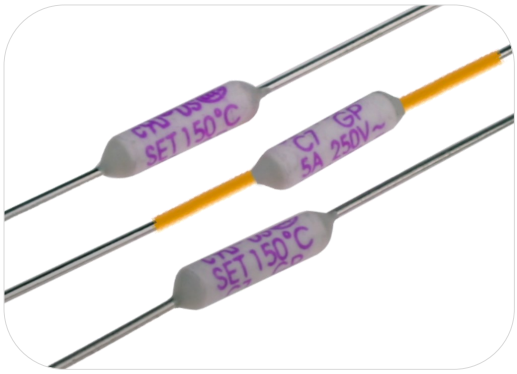

Description

Alloy Thermal-Link / Alloy Thermal Cutoff (ATCO) is defined as a non-resettable protective device functioning one time only. It is widely used in electrical equipment. ATCO is mainly consist of fusible alloy, flux resin, case, sealant and lead wires. Normally, fusible alloy is jointed to the two lead wires. Under abnormal conditions, when the temp. reaches to the fusing temp. of ATCO, the fusible alloy melts and quickly retracts to the two lead wire ends with the aid of the flux resin and disconnects the circuit completely.

SETsafe | SETfuse Alloy Thermal-Link (ATCO) C series Rated Functioning Temp. from 76 ℃ to 221 ℃, Rated Current: 5 A~10 A, safety certification Includes UL, cUL, TUV, PSE, KC, CCC, and complies with RoHS and REACH.

Features

- Non-Resettable
- High Accuracy of Functioning Temp.
- RoHS & REACH Compliant

Applications

- Lamps
- Switched-Mode Power Supplies
- Home Electrical Appliances
- Transformers
- Motors
- Batteries

Customization

- Other Temp.
- The Length of Lead Wires
- Taping Packing Available
- Lead Wires can be Insulated
- Tinned Copper Wires or CP Wires
- Leads Forming Types

Structure Diagrams

Axial

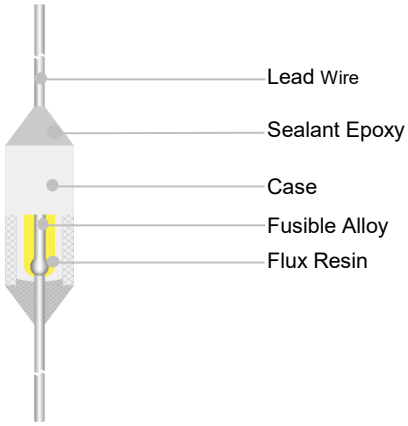

Marking

Axial (Color for reference only)

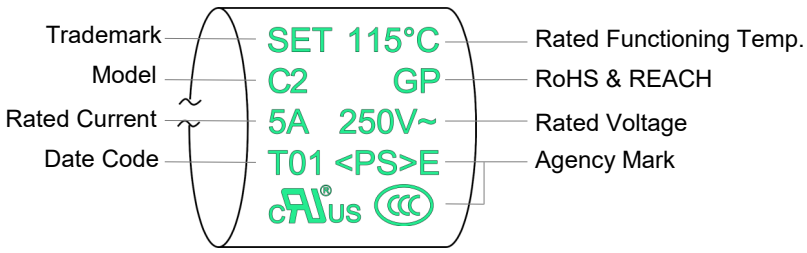

Remark: The first letter of the Date Code Year/quarter A stands for 2000, B stands for 2001, 01 stands for the first quarter, 02 stands for the second quarter, and so on.

Dimensions (mm)

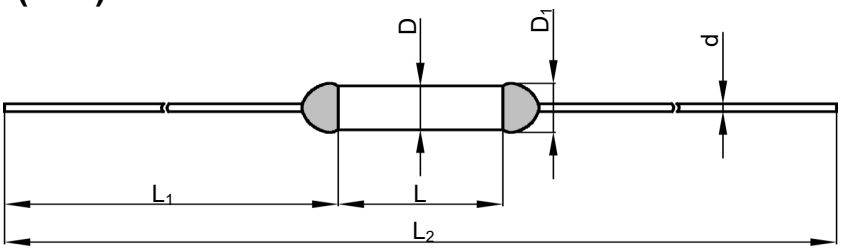

L	L_1	L_2	D	D_1	d
11.5 ± 0.5	34.0 ± 2.0	79.5 ± 3.0	3.3 ± 0.5	≤ 3.8	0.80 ± 0.05

All Rights Reserved by Xiamen SET Electronics Co., Ltd. 2024-2026 V1.1

Specifications

Rated Functioning Temp. (T_f) °C

	Model	Fusing Temp. (°C)	T_h (°C)	T_m (°C)	I_r (A)	U_r (V)	I_n 8 / 20 μs (15 Times) (kA)	I_{max} 8 / 20 μs (1 Time) (kA)	UL	cUL	TUV	PSE	KC	CCC	RoHS REACH
221	C31	218 ± 2	186	250	5	AC 250	3.5	7	●	●	●	●	○	●	●
						AC 125	3.5	7	●	●	○	●	○	○	●
						DC 60	3.5	7	●	●	●	○	○	●	●
205	C32	199 ± 3	167	250	5	AC 250	3.5	7	○	○	●	●	○	●	●
						AC 125	3.5	7	●	●	○	●	○	○	●
						DC 60	3.5	7	●	●	●	○	○	●	●
187	C17	182 ± 3	162	250	5	AC 250	3	6	●	●	●	●	●	●	●
						DC 60	3	6	●	●	●	○	○	○	●
160	C16	154 ± 2	133	200	5	AC 250	3	6	○	○	●	●	○	●	●
						DC 60	3	6	○	○	●	○	○	●	●
150	C7	145 ± 2	123	200	5	AC 250	3	6	●	●	●	●	●	●	●
					7	DC 50	3	6	●	●	○	○	○	○	●
145	C6	140 ± 2	118	200	5	AC 250	3	6	●	●	●	●	●	●	●
					7	DC 50	3	6	●	●	○	○	○	○	●
			95		10	DC 60	3	6	●	●	●	○	○	○	●
139	C13	135 ± 2	112	200	5	AC 250	3	6	●	●	●	●	●	●	●
			112		7	DC 50	3	6	●	●	○	○	○	○	●
			85		8.5	DC 60	3	6	●	●	●	○	○	○	●
136	C9	131 ± 2	111	200	5	AC 250	3	6	●	●	●	●	●	●	●
					7	DC 50	3	6	●	●	○	○	○	○	●
135	C5	130 ± 2	108	200	5	AC 250	3	6	●	●	●	●	●	●	●
					7	DC 50	3	6	●	●	○	○	○	○	●
133	C8	130 ± 2	108	200	5	AC 250	3	6	●	●	●	●	●	●	●
					7	DC 50	3	6	●	●	○	○	○	○	●
130	C4	125 ± 2	103	200	5	AC 250	3	6	●	●	●	●	●	●	●
					7	DC 50	3	6	●	●	○	○	○	○	●
125	C3	121 ± 2	98	200	5	AC 250	3	6	●	●	●	●	●	●	●
					7	DC 50	3	6	●	●	○	○	○	○	●
115	C2	111 ± 2	89	200	5	AC 250	3	6	●	●	●	●	●	●	●
					7	DC 50	3	6	●	●	○	○	○	○	●
			75		8	DC 60	3	6	●	●	●	○	○	○	●
102	C1	98 ± 3	77	200	5	AC 250	3	6	○	○	●	●	●	●	●
						AC 125	3	6	●	●	○	●	○	○	●
						DC 50	3	6	●	●	○	○	○	○	●
97	C21	92 ± 3	70	200	5	AC 250	2	4	○	○	○	●	○	○	●
						AC 125	2	4	●	●	○	●	○	○	●
						DC 50	2	4	●	●	○	○	○	○	●
86	C18	81 ± 3	61	200	5	AC 250	2	4	○	○	●	●	●	●	●
						AC 125	2	4	●	●	○	●	○	○	●
						DC 50	2	4	●	●	○	○	○	○	●
			45		6	DC 60	2	4	●	●	●	○	○	○	●
76	C0	73 ± 2	53	200	5	AC 250	2	4	○	○	●	●	●	●	●
						DC *	2	4	○	○	○	○	○	○	●

Note:

1: "●"Means certificated, "○"Means non-certificated, RoHS & REACH Compliant .

2: " * "Customizable DC voltage.

All Rights Reserved by Xiamen SET Electronics Co., Ltd. 2024-2026 V1.1

Agency Information

Institution	Standards	The File No. and certification No. obtained by SETsafe | SETfuse
	UL 60691	E214712
	CAN-CSA-E60691	E214712
	EN 60691	R50259363
	J60691	JET2121-32001-2021、JET2121-32001-2022 JET2121-32001-2023、JET2121-32001-2024 JET2121-32001-2025、JET2121-32001-2026 JET2121-32001-2027、JET2121-32001-2028
	K60691	SU05023-11001、SU05023-11002 SU05023-11003
	GB 9816.1	2020980205000187

Soldering

Hand-Soldering

1. Soldering should be carried out according to Table C-1.
2. The thermal element of ATCO is fusible alloy with low melting point, which is jointed with ATCO lead wires. Improper soldering operation (too high soldering temp. , too long soldering time, too short lead wire etc.) may transfer more heat to the thermal element and ATCO may open in advance.
3. When soldering conditions are more severe than those listed in Table C-1, a heat sink fixture should be used between soldering point and ATCO body.
4. When soldering, please do not pull / push or twist ATCO body or lead wires.
5. After soldering, let it naturally cool for longer than 20 seconds. During cooling, never move the ATCO body or lead wires.

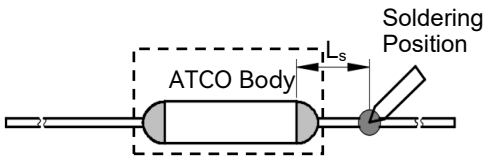

FIGURE C-1

TABLE C-1 Hand-Soldering Time

Rated Functioning Temp. (T_f)	Max. Allowable Soldering Time for Different Lead Wire Length (Fig.C-1)									Max. Soldering Temp.
	L_s Length	Time		L_s Length	Time		L_s Length	Time		
		Tinned Copper Wire	CP Wire		Tinned Copper Wire	CP Wire		Tinned Copper Wire	CP Wire	
(°C)	(mm)	(s)	(s)	(mm)	(s)	(s)	(mm)	(s)	(s)	(°C)
76 to 101	10	1[a]	4	20	2	5	30	3	6	400
102 to 115	10	1[a]	4	20	2	5	30	3	6	
116 to 135	10	1[a]	4	20	3	6	30	5	8	
136 to 150	10	3	6	20	5	8	30	5	8	
151 to 221	10	4	7	20	6	9	30	7	10	

Note:
a: Auxiliary Heat Sink Fixture is Required to Avoid ATCO Cutting off Unexpectedly.

All Rights Reserved by Xiamen SET Electronics Co., Ltd. 2024-2026 V1.1

Wave Soldering

The wave soldering parameters as Table C-2, for reference only, when ATCO is for practice use, you need to do some validation experiments. For example, using X-RAY to see the fusible alloy of ATCO whether damage after wave soldering.

TABLE C-2 Wave Soldering Parameters Setting

Rated Functioning Temp. (T_f)	Max. Allowable Preheating Temp. When the Length of Lead Wire is Different (Fig.C-1)				Preheating Time (t_1)	Max. Wave Soldering Temp.	Dwelling Time (t_2)	Cooling Time (t_3)
	L_s Length	Preheating Temp.	L_s Length	Preheating Temp.				
(°C)	(mm)	(°C)	(mm)	(°C)	(s)	(°C)	(s)	(s)
76 to 130	Recommend Hand-Soldering							
131 to 150	20	80	30	90	< 60	≤ 260	≤ 3	≤ 10
151 to 221	20	90	30	100	< 60	≤ 260	≤ 3	≤ 10

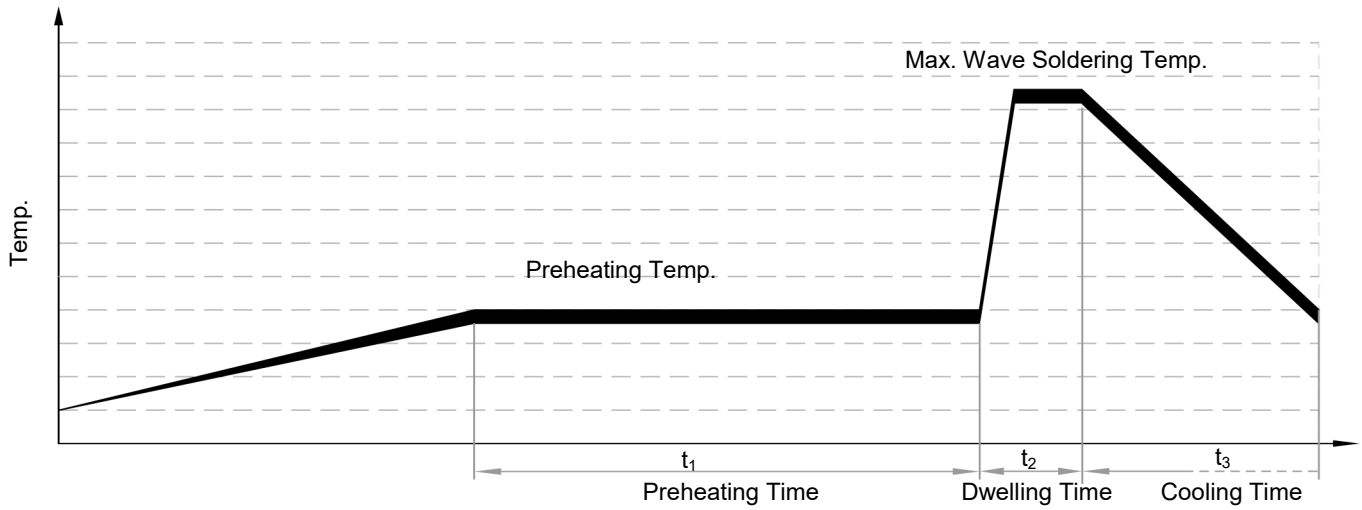

All Rights Reserved by Xiamen SET Electronics Co., Ltd. 2024-2026 V1.1

Product Temp.-Time Curve (Reference)

The Temp.-Time Curve of Thermal-Link in different temp. oil bath.

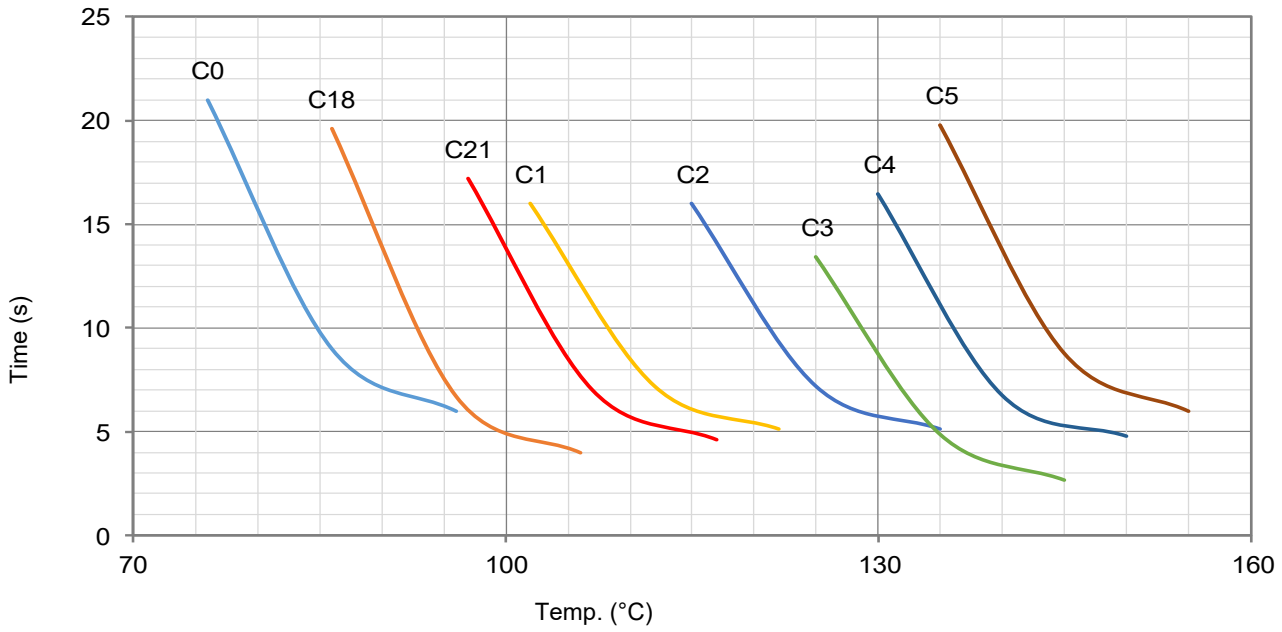

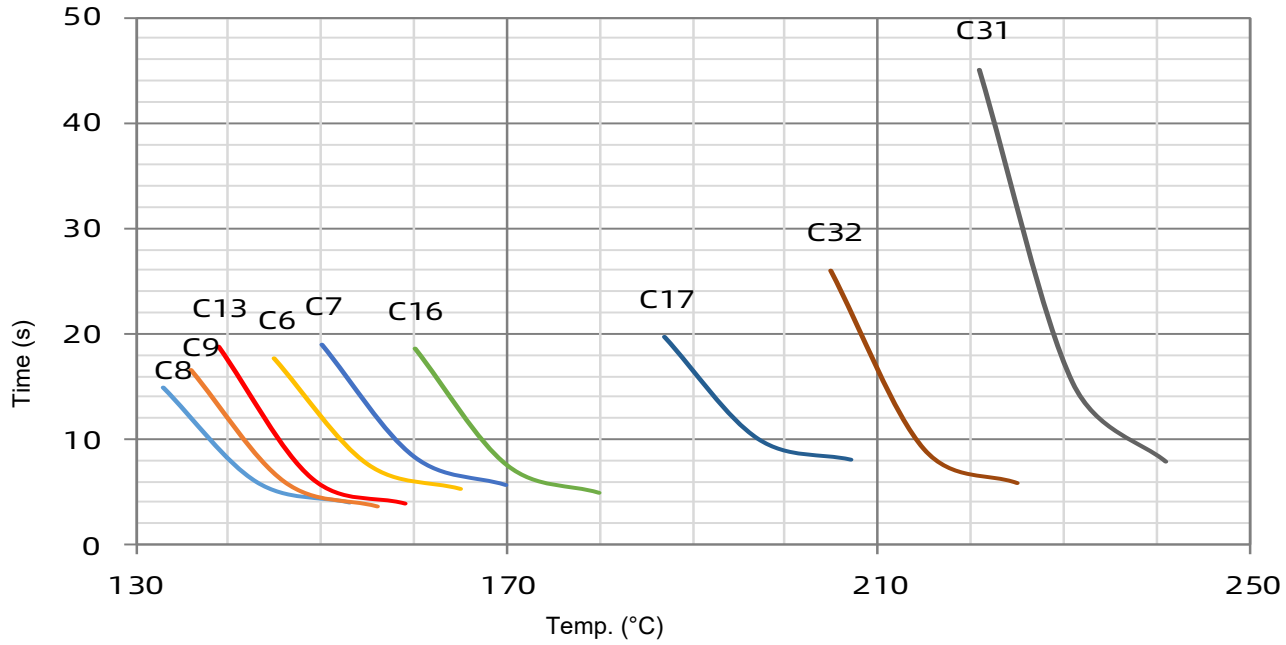

All Rights Reserved by Xiamen SET Electronics Co., Ltd. 2024-2026 V1.1

Product Current-Time Curve (Reference)

The Current-Time Curve shows functioning time at multi-times rated current at room temperature 25 ± 2 °C.

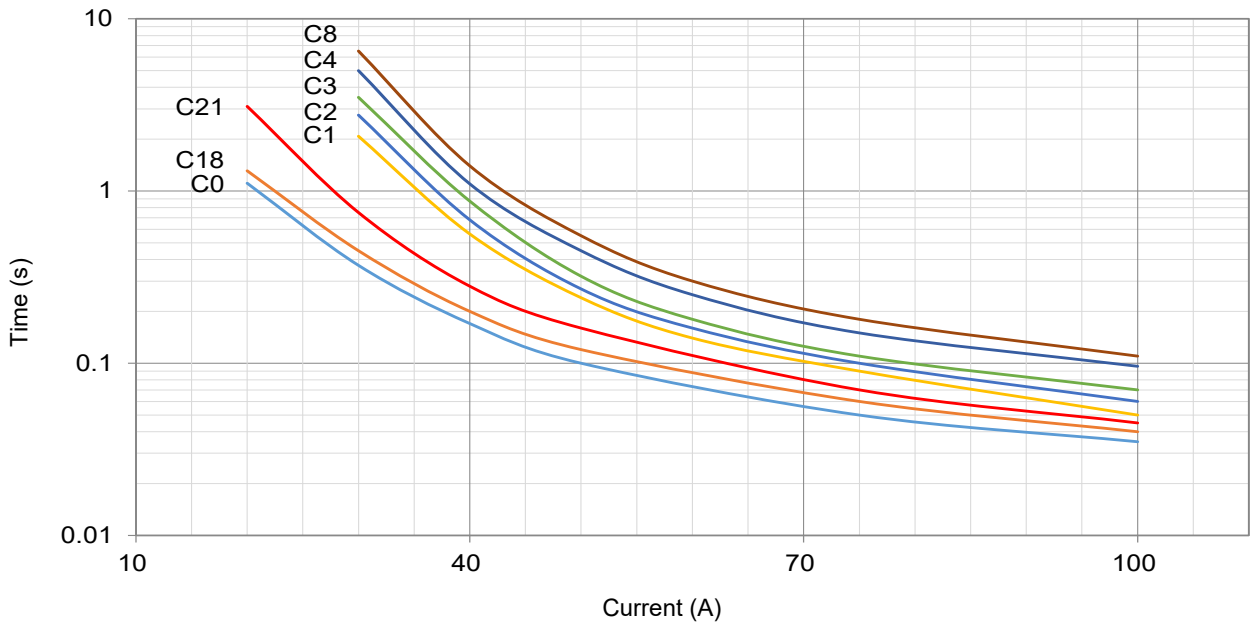

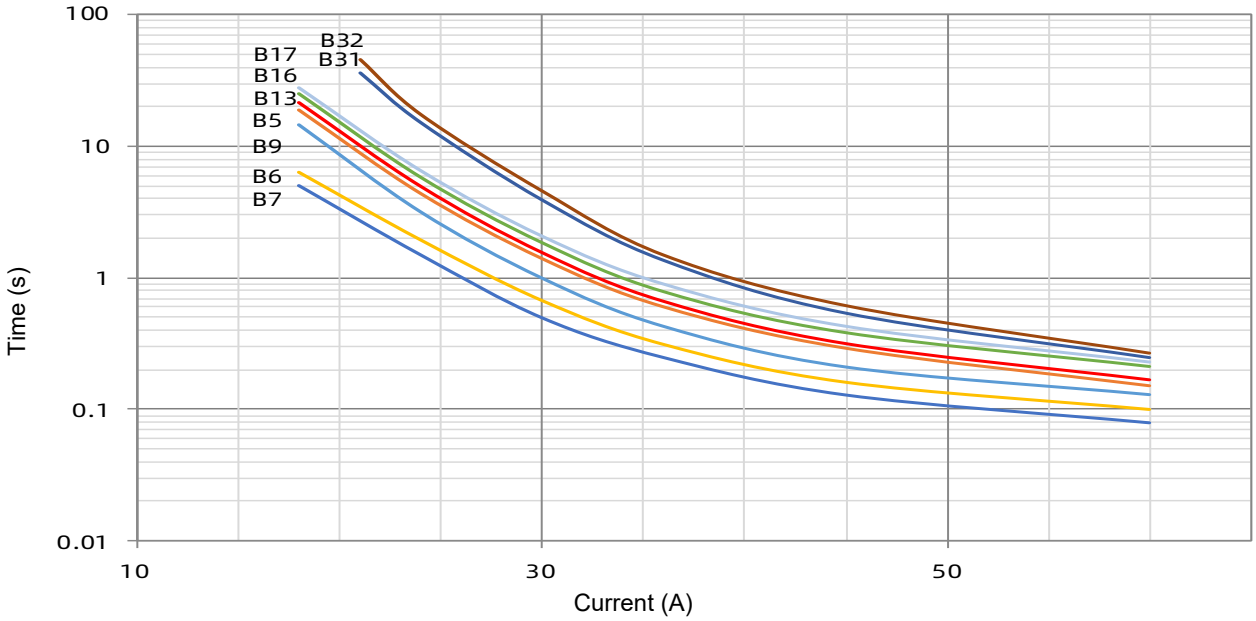

All Rights Reserved by Xiamen SET Electronics Co., Ltd. 2024-2026 V1.1

Packaging Information

Bulk

Item	PE Bag	PE Bag	Carton
Dimensions (mm)	135 × 85	190 × 180	440 × 300 × 260
Quantity (PCS)	100	1000	25000
Gross Weight (kg)			16.0 ± 10%

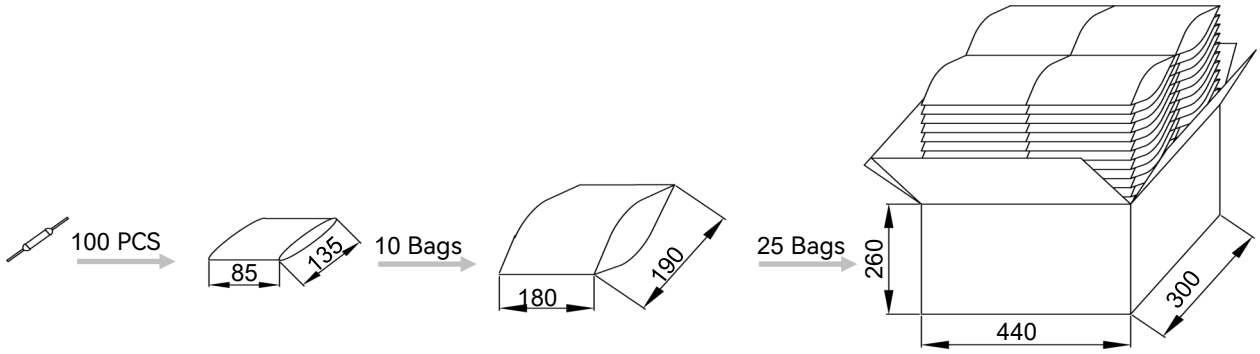

Taping

Item	**Scroll**	Box	Carton
Dimensions (mm)	Φ 250 × 94	258 × 258 × 98	480 × 300 × 260
Quantity (PCS)	2500	2500	10000
Gross Weight (kg)			8.0 ± 10%

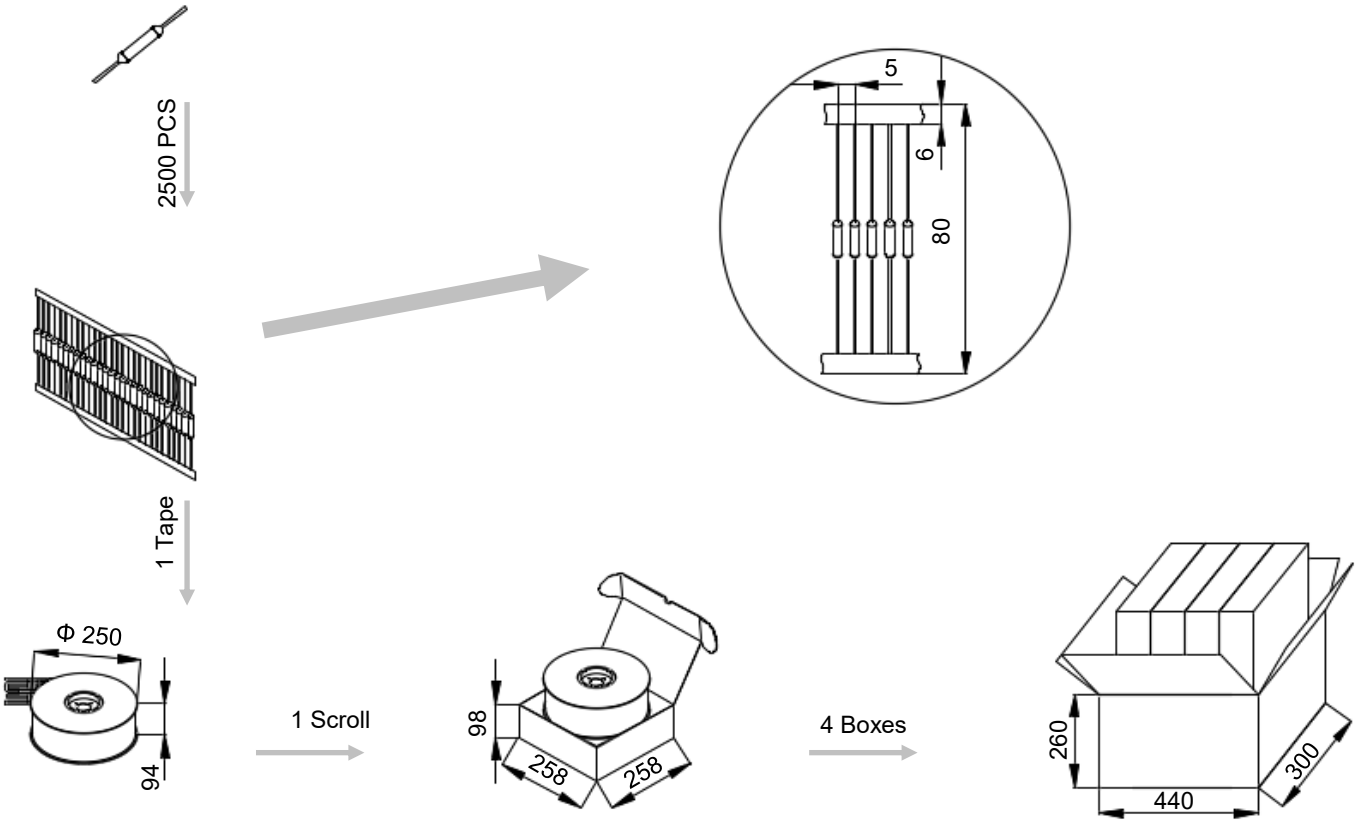

All Rights Reserved by Xiamen SET Electronics Co., Ltd. 2024-2026 V1.1

Part Numbering System

ATCO - C 2 - A N N A B - 001

Other Options

Packing

B	Bulk
T	Taping

Leads Forming

A	Straight Lead
B	Single Lead Bending
C	Leads Bending
D	Leads Kinking
E	Leads Bending and Kinking

Color of Insulation Tube

W	White
Y	Yellow
R	Red
K	Black
N	None

Insulation Tube Material

T	Teflon
P	Polyester
N	None

Lead Wire Type

A	Tinned Copper Wire
B	Tinned Copper Plated Wire

Rated Functioning Temp.

2	115 °C, See Specifications

Series

C	Series See Specifications

Product Category

ATCO	Alloy Thermal-Link

All Rights Reserved by Xiamen SET Electronics Co., Ltd. 2024-2026 V1.1

Thermal-Link (ATCO)-Alloy Type

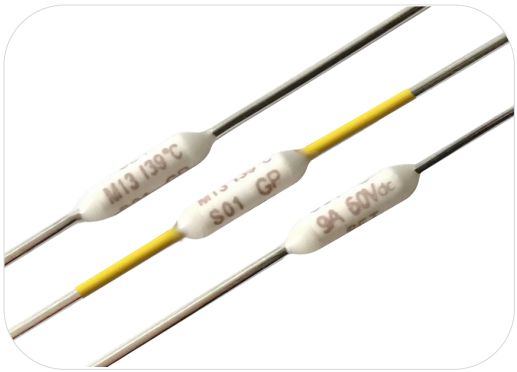

Description

Alloy Thermal-Link / Alloy Thermal Cutoff (ATCO) is defined as a non-resettable protective device functioning one time only. It is widely used in electrical equipment. ATCO is mainly consist of fusible alloy, flux resin, case, sealant and lead wires. Normally, fusible alloy is jointed to the two lead wires. Under abnormal conditions, when the temp. reaches to the fusing temp. of ATCO, the fusible alloy melts and quickly retracts to the two lead wire ends with the aid of the flux resin and disconnects the circuit completely.

SETsafe | SETfuse Alloy Thermal-Link (ATCO) M series Rated Functioning Temp. 139 ℃, Rated Current: 9 A, safety certification Includes UL, cUL, TUV, and complies with RoHS and REACH.

Features

- Non-Resettable
- High Accuracy of Functioning Temp.
- RoHS & REACH Compliant

Applications

- Lamps
- Switched-Mode Power Supplies
- Home Electrical Appliances
- Transformers
- Motors
- Batteries

Customization

- Other Temp.
- The Length of Lead Wires
- Taping Packing Available
- Lead Wires can be Insulated
- Tinned Copper Wires or CP Wires
- Leads Forming Types

Structure Diagrams

Axial

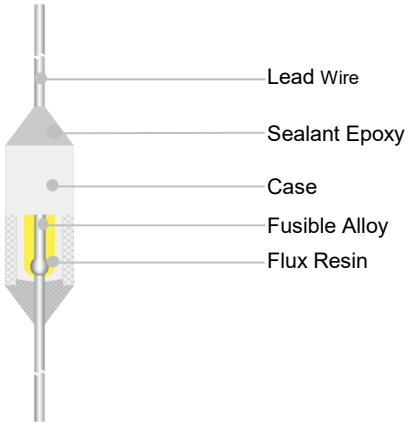

Marking

Axial (Color for reference only)

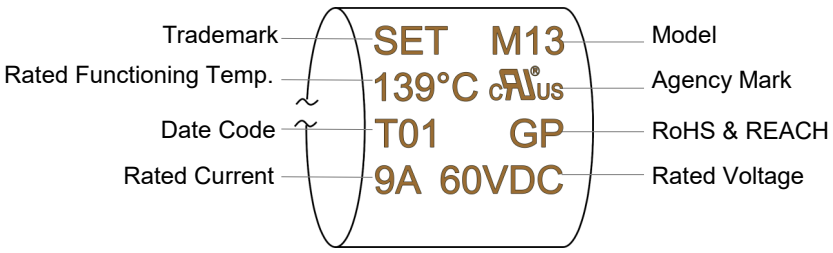

Remark: The first letter of the Date Code Year/quarter A stands for 2000, B stands for 2001, 01 stands for the first quarter, 02 stands for the second quarter, and so on.

Dimensions (mm)

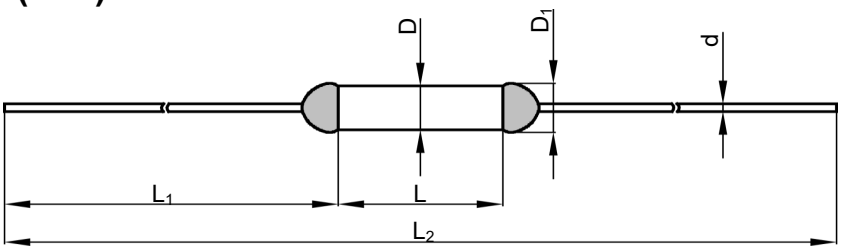

L	L_1	L_2	D	D_1	d
6.5 ± 0.5	37.0 ± 2.0	80.5 ± 3.0	2.1 ± 0.5	≤ 2.6	0.80 ± 0.05

All Rights Reserved by Xiamen SET Electronics Co., Ltd. 2024-2026 V1.1

Specifications

Rated Functioning Temp. (T_f) °C

	Model	Fusing Temp.	T_h	T_m	I_r	U_r	I_n 8 / 20 μs (15 Times)	I_{max} 8 / 20 μs (1 Time)	UL	cUL	TUV	RoHS REACH
		(°C)	(°C)	(°C)	(A)	(V)	(kA)	(kA)	UL	cUL	TUV	
139	M13	135 ± 2	85	200	9	DC 60	3.5	7	●	●	●	●

Note:

1: "●"Means certificated, "○"Means non-certificated, RoHS & REACH Compliant .

2: " * "Customizable DC voltage.

All Rights Reserved by Xiamen SET Electronics Co., Ltd. 2024-2026 V1.1

Agency Information

Institution	Standards	The File No. and certification No. obtained by SETsafe | SETfuse
	UL 60691	E214712
	CAN-CSA-E60691	E214712
	EN 60691	R50415881

Soldering

Hand-Soldering

1. Soldering should be carried out according to Table M-1.
2. The thermal element of ATCO is fusible alloy with low melting point, which is jointed with ATCO lead wires. Improper soldering operation (too high soldering temp. , too long soldering time, too short lead wire etc.) may transfer more heat to the thermal element and ATCO may open in advance.
3. When soldering conditions are more severe than those listed in Table M-1, a heat sink fixture should be used between soldering point and ATCO body.
4. When soldering, please do not pull / push or twist ATCO body or lead wires.
5. After soldering, let it naturally cool for longer than 20 seconds. During cooling, never move the ATCO body or lead wires.

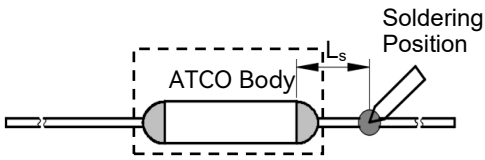

FIGURE M-1

TABLE M-1 Hand-Soldering Time

Rated Functioning Temp. (T_f)	Max. Allowable Soldering Time for Different Lead Wire Length (Fig.M-1)									Max. Soldering Temp.
	L_s Length	Time		L_s Length	Time		L_s Length	Time		
		Tinned Copper Wire	CP Wire		Tinned Copper Wire	CP Wire		Tinned Copper Wire	CP Wire	
(°C)	(mm)	(s)	(s)	(mm)	(s)	(s)	(mm)	(s)	(s)	(°C)
139	10	3	6	20	5	8	30	5	8	400

Note:
a: Auxiliary Heat Sink Fixture is Required to Avoid ATCO Cutting off Unexpectedly.

All Rights Reserved by Xiamen SET Electronics Co., Ltd. 2024-2026 V1.1

Wave Soldering

The wave soldering parameters as Table M-2, for reference only, when ATCO is for practice use, you need to do some validation experiments. For example, using X-RAY to see the fusible alloy of ATCO whether damage after wave soldering.

TABLE M-2 Wave Soldering Parameters Setting

Rated Functioning Temp. (T_f)	Max. Allowable Preheating Temp. When the Length of Lead Wire is Different (Fig.M-1)				Preheating Time (t_1)	Max. Wave Soldering Temp.	Dwelling Time (t_2)	Cooling Time (t_3)
	L_s Length	Preheating Temp.	L_s Length	Preheating Temp.				
(°C)	(mm)	(°C)	(mm)	(°C)	(s)	(°C)	(s)	(s)
139	20	80	30	90	< 60	≤ 260	≤ 3	≤ 10

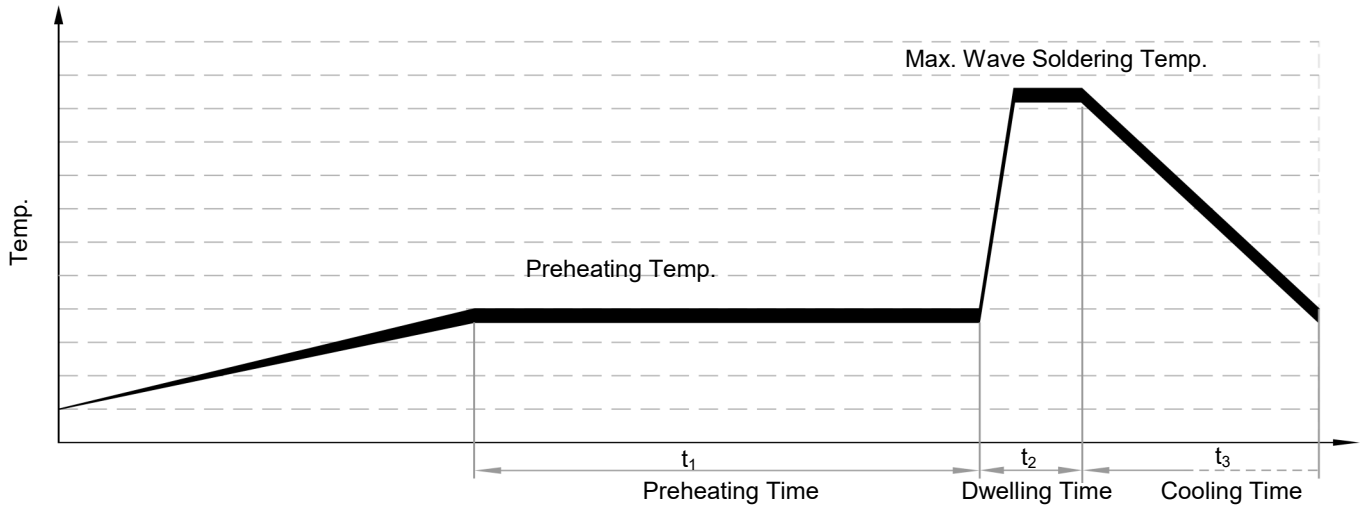

All Rights Reserved by Xiamen SET Electronics Co., Ltd. 2024-2026 V1.1

Product Temp.-Time Curve (Reference)

The Temp.-Time Curve of Thermal-Link in different temp. oil bath.

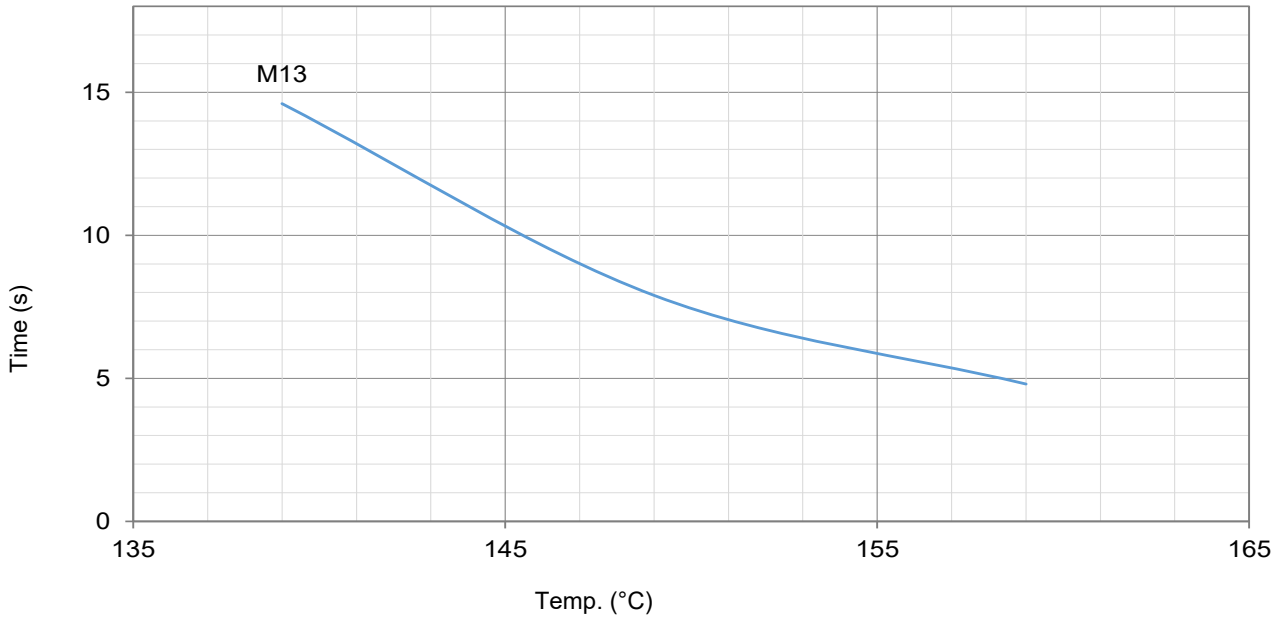

Product Current-Time Curve (Reference)

The Current-Time Curve shows functioning time at multi-times rated current at room temperature 25 ± 2 °C.

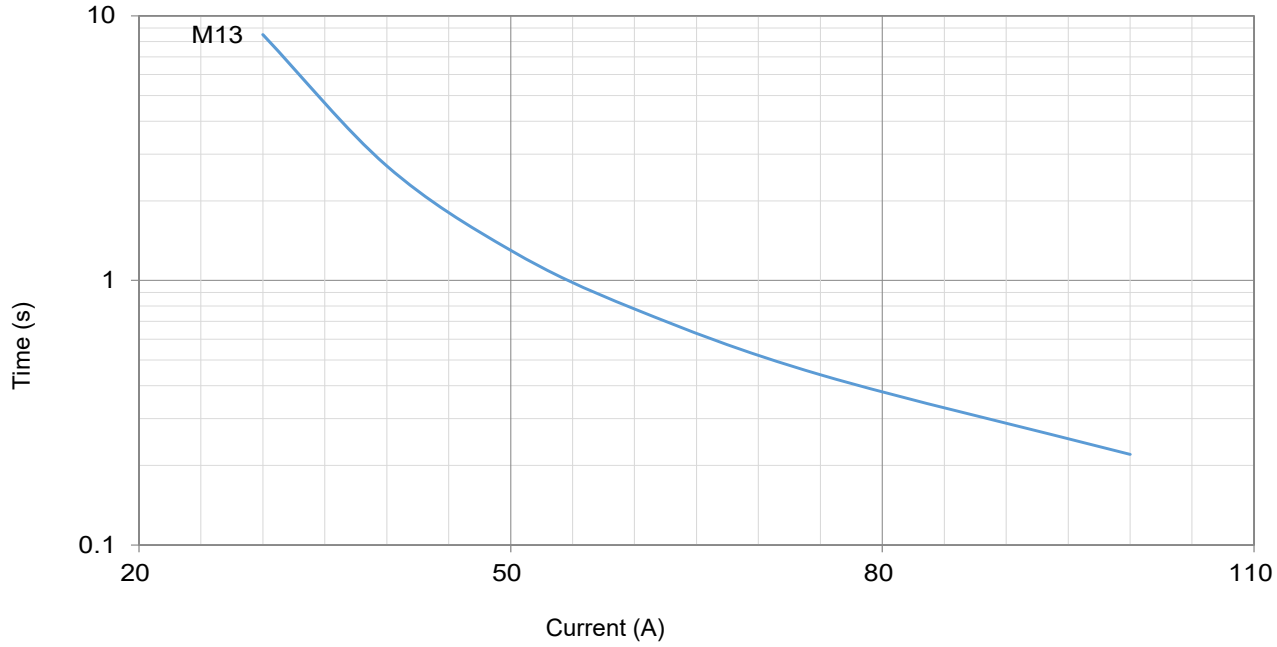

All Rights Reserved by Xiamen SET Electronics Co., Ltd. 2024-2026 V1.1

Packaging Information

Bulk

Item	PE Bag	PE Bag	Carton
Dimensions (mm)	135 × 85	190 × 180	440 × 300 × 260
Quantity (PCS)	100	1000	30000
Gross Weight (kg)			13.0 ± 10%

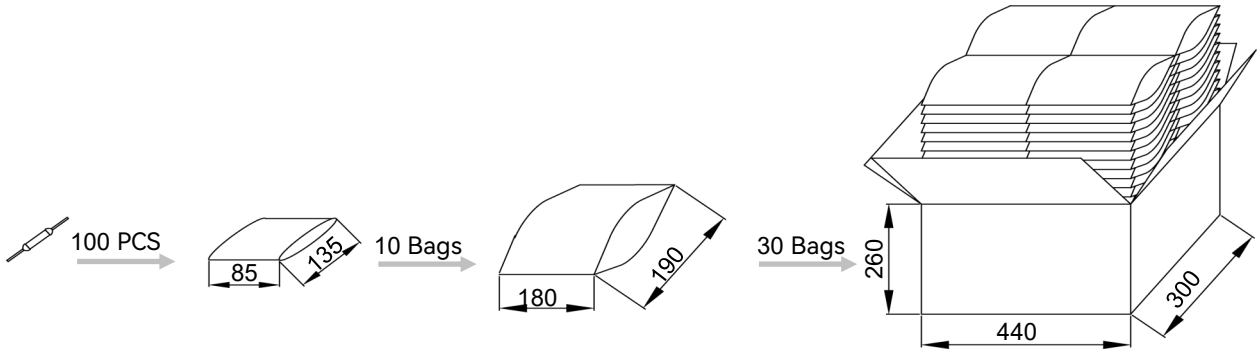

Taping

Item	**Scroll**	Box	Carton
Dimensions (mm)	Φ 250 × 94	258 × 258 × 98	480 × 300 × 260
Quantity (PCS)	2500	2500	10000
Gross Weight (kg)			12.0 ± 10%

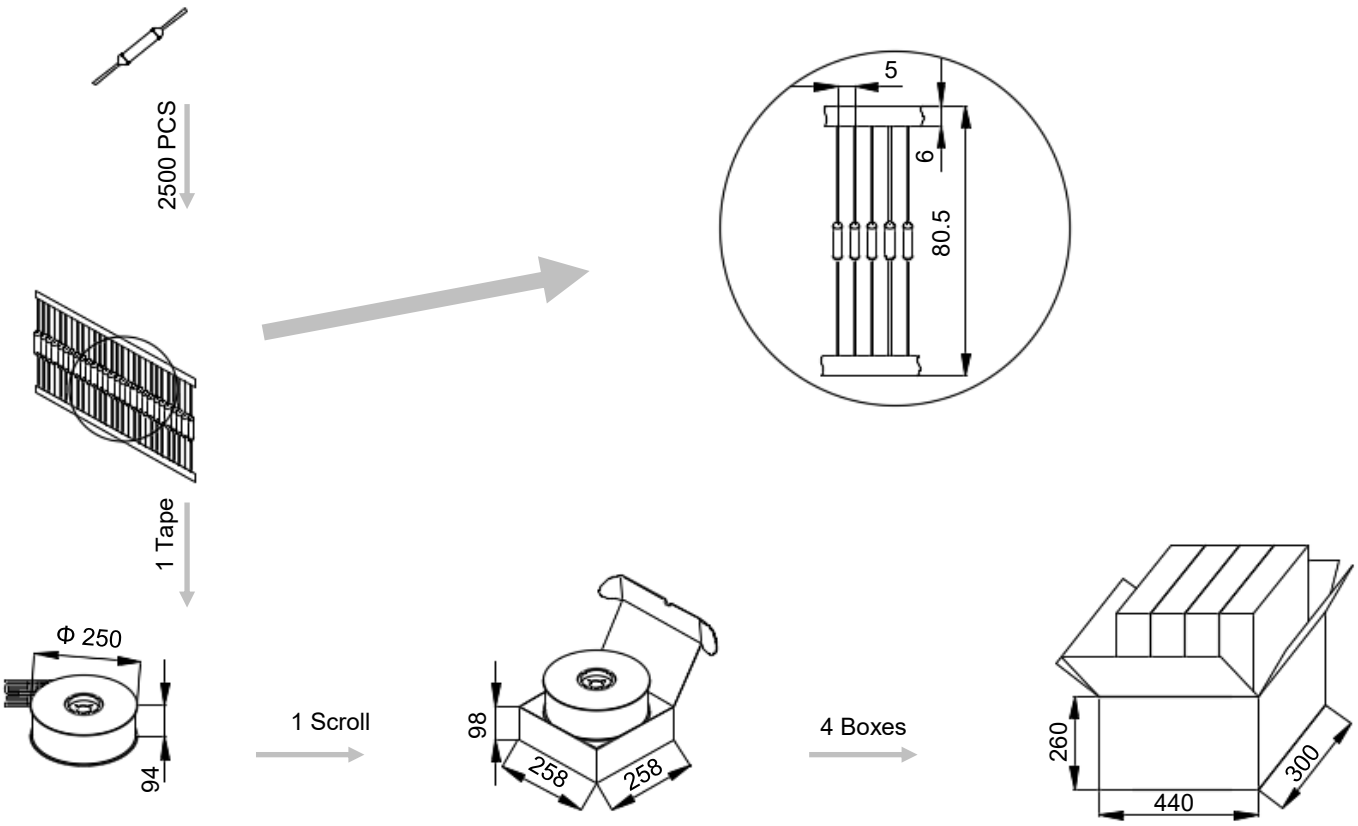

All Rights Reserved by Xiamen SET Electronics Co., Ltd. 2024-2026 V1.1

Part Numbering System

ATCO - M 13 - A N N A B - 001

Other Options

Packing

B	Bulk
T	Taping

Leads Forming

A	Straight Lead
B	Single Lead Bending
C	Leads Bending
D	Leads Kinking
E	Leads Bending and Kinking

Color of Insulation Tube

W	White
Y	Yellow
R	Red
K	Black
N	None

Insulation Tube Material

T	Teflon
P	Polyester
N	None

Lead Wire Type

A	Tinned Copper Wire
B	Tinned Copper Plated Wire

Rated Functioning Temp.

13	139 °C, See Specifications

Series

M	Series See Specifications

Product Category

ATCO	Alloy Thermal-Link

All Rights Reserved by Xiamen SET Electronics Co., Ltd. 2024-2026 V1.1

Thermal-Link (ATCO)-Alloy Type

U Series

Description

Alloy Thermal-Link / Alloy Thermal Cutoff (ATCO) is defined as a non-resettable protective device functioning one time only. It is widely used in electrical equipment. ATCO is mainly consist of fusible alloy, flux resin, case, sealant and lead wires. Normally, fusible alloy is jointed to the two lead wires. Under abnormal conditions, when the temp. reaches to the fusing temp. of ATCO, the fusible alloy melts and quickly retracts to the two lead wire ends with the aid of the flux resin and disconnects the circuit completely.

SETsafe | SETfuse Alloy Thermal-Link (ATCO) U series Rated Functioning Temp. from 76 ℃ to 221 ℃, Rated Current: 10 A, safety certification Includes UL, cUL, TUV, PSE, CCC, and complies with RoHS and REACH.

Features

- Non-Resettable
- High Accuracy of Functioning Temp.
- RoHS & REACH Compliant

Applications

- Lamps
- Switched-Mode Power Supplies
- Home Electrical Appliances
- Transformers
- Motors
- Power Strips

Customization

- Other Temp.
- The Length of Lead Wires
- Taping Packing Available
- Lead Wires can be Insulated
- Tinned Copper Wires or CP Wires
- Leads Forming Types

Structure Diagrams

Axial

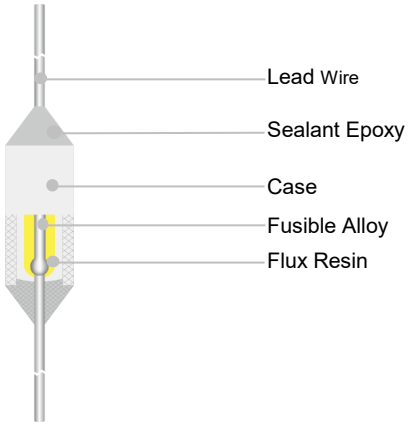

Marking

Axial (Color for reference only)

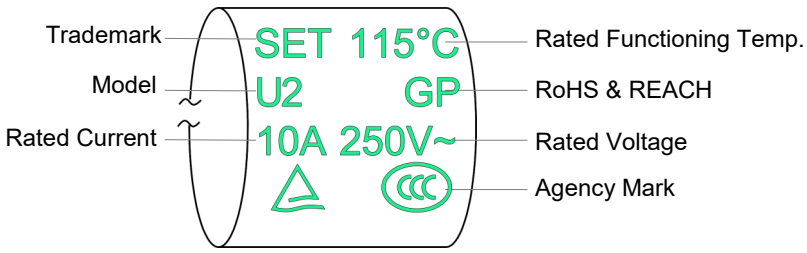

Dimensions (mm)

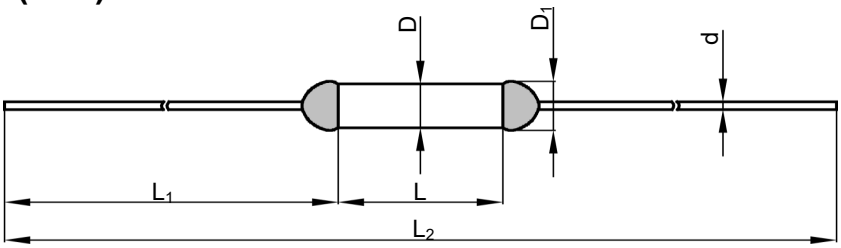

L	L_1	L_2	D	D_1	d
14.0 ± 0.5	33.0 ± 2.0	80.0 ± 3.0	4.0 ± 0.5	≤ 4.5	1.05 ± 0.05

All Rights Reserved by Xiamen SET Electronics Co., Ltd. 2024-2026 V1.1

Specifications

Rated Functioning Temp. (T_f) °C

	Model	Fusing Temp. (°C)	T_h (°C)	T_m (°C)	I_r (A)	U_r (V)	I_n 8 / 20 μs (15 Times) (kA)	I_{max} 8 / 20 μs (1 Time) (kA)	UL	cUL	TUV	PSE	CCC	RoHS REACH
221	U31	218 ± 2	186	250	10	AC 250	5	10	●	●	●	○	●	●
			182[a]			DC 60	5	10	○	○	●	○	●	●
205	U32	199 ± 3	167	250	10	AC 250	5	10	○	○	●	○	●	●
			163[a]			DC 60	5	10	○	○	●	○	●	●
160	U16	155 ± 2	130	200	10	AC 250	4	8	○	○	●	●	●	●
			126[a]			DC 60	4	8	○	○	●	○	●	●
150	U7	145 ± 2	120	200	10	AC 250	4	8	○	○	●	●	●	●
			116[a]			DC 60	4	8	○	○	●	○	●	●
145	U6	140 ± 2	115	200	10	AC 250	4	8	○	○	●	●	●	●
			111[a]			DC 60	4	8	○	○	●	○	●	●
135	U5	130 ± 2	105	200	10	AC 250	4	8	●	●	●	●	●	●
			101[a]			DC 60	4	8	○	○	●	○	●	●
130	U4	125 ± 2	100	200	10	AC 250	4	8	○	○	●	●	●	●
			96[a]			DC 60	4	8	○	○	●	○	●	●
125	U3	121 ± 2	95	200	10	AC 250	4	8	○	○	●	●	●	●
			91[a]			DC 60	4	8	○	○	●	○	●	●
115	U2	111 ± 2	85	200	10	AC 250	4	8	●	●	●	●	●	●
			81[a]			DC 60	4	8	○	○	●	○	●	●
102	U1	98 ± 3	72	200	10	AC 250	4	8	○	○	●	●	●	●
			68[a]			DC 60	4	8	○	○	●	○	●	●
86	U18	81 ± 3	51	200	10	AC 250	3	6	○	○	●	○	●	●
			43[a]			DC 60	3	6	○	○	●	○	●	●
76	U0	73 ± 2	43	200	10	AC 250	3	6	●	●	●	○	●	●
			39[a]			DC 60	3	6	●	●	●	○	●	●

Note:

1: "●"Means certificated, "○"Means non-certificated.

2: RoHS & REACH Compliant .

3: " a ": The temperature measurement point for holding temperature (T_h) shall be positioned 50 mm away from the product body, in accordance with the requirements specified in Appendix H.11.2 of IEC 60691:2015 and Appendix I of GB/T 9816.1-2023.

All Rights Reserved by Xiamen SET Electronics Co., Ltd. 2024-2026 V1.1

Agency Information

Institution	Standards	The File No. and certification No. obtained by SETsafe | SETfuse
	UL 60691	E214712
	CAN-CSA-E60691	E214712
	EN 60691	R50207621
	J60691	JET2121-32001-2029、JET2121-32001-2030 JET2121-32001-2031
	GB 9816.1	2020980205000193

Soldering

Hand-Soldering

1. Soldering should be carried out according to Table U-1.
2. The thermal element of ATCO is fusible alloy with low melting point, which is jointed with ATCO lead wires. Improper soldering operation (too high soldering temp. , too long soldering time, too short lead wire etc.) may transfer more heat to the thermal element and ATCO may open in advance.
3. When soldering conditions are more severe than those listed in Table U-1, a heat sink fixture should be used between soldering point and ATCO body.
4. When soldering, please do not pull / push or twist ATCO body or lead wires.
5. After soldering, let it naturally cool for longer than 20 seconds. During cooling, never move the ATCO body or lead wires.

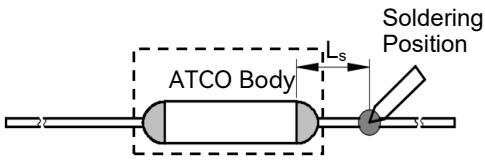

FIGURE U-1

TABLE U-1 Hand-Soldering Time

Rated Functioning Temp. (T_f)	Max. Allowable Soldering Time for Different Lead Wire Length (Fig.U-1)									Max. Soldering Temp.
	L_s Length	Time		L_s Length	Time		L_s Length	Time		
		Tinned Copper Wire	CP Wire		Tinned Copper Wire	CP Wire		Tinned Copper Wire	CP Wire	
(°C)	(mm)	(s)	(s)	(mm)	(s)	(s)	(mm)	(s)	(s)	(°C)
76 to 101	10	1[a]	4	20	2	5	30	3	6	400
102 to 115	10	1[a]	4	20	2	5	30	3	6	
116 to 135	10	1[a]	4	20	3	6	30	5	8	
136 to 150	10	3	6	20	5	8	30	5	8	
151 to 221	10	4	7	20	6	9	30	7	10	

Note:
a: Auxiliary Heat Sink Fixture is Required to Avoid ATCO Cutting off Unexpectedly.

All Rights Reserved by Xiamen SET Electronics Co., Ltd. 2024-2026 V1.1

Wave Soldering

The wave soldering parameters as Table U-2, for reference only, when ATCO is for practice use, you need to do some validation experiments. For example, using X-RAY to see the fusible alloy of ATCO whether damage after wave soldering.

TABLE U-2 Wave Soldering Parameters Setting

Rated Functioning Temp. (T_f)	Max. Allowable Preheating Temp. When the Length of Lead Wire is Different (Fig.U-1)				Preheating Time (t_1)	Max. Wave Soldering Temp.	Dwelling Time (t_2)	Cooling Time (t_3)
	L_s Length	Preheating Temp.	L_s Length	Preheating Temp.				
(°C)	(mm)	(°C)	(mm)	(°C)	(s)	(°C)	(s)	(s)
76 to 130	Recommend Hand-Soldering							
131 to 150	20	80	30	90	< 60	≤ 260	≤ 3	≤ 10
151 to 221	20	90	30	100	< 60	≤ 260	≤ 3	≤ 10

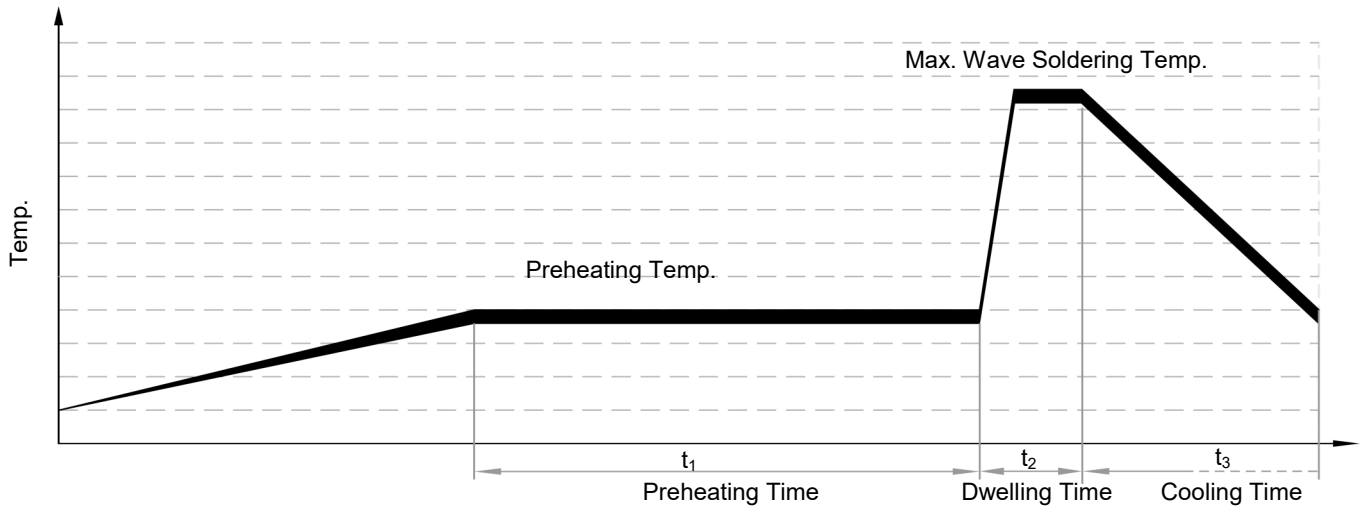

All Rights Reserved by Xiamen SET Electronics Co., Ltd. 2024-2026 V1.1

Product Temp.-Time Curve (Reference)

The Temp.-Time Curve of Thermal-Link in different temp. oil bath.

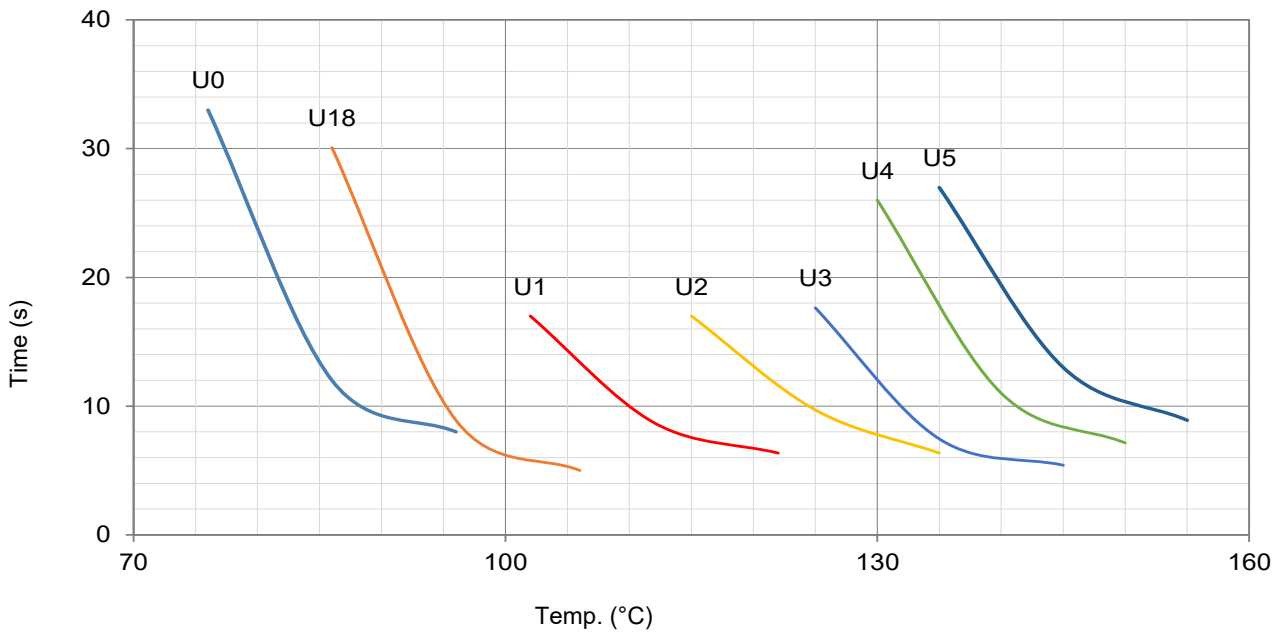

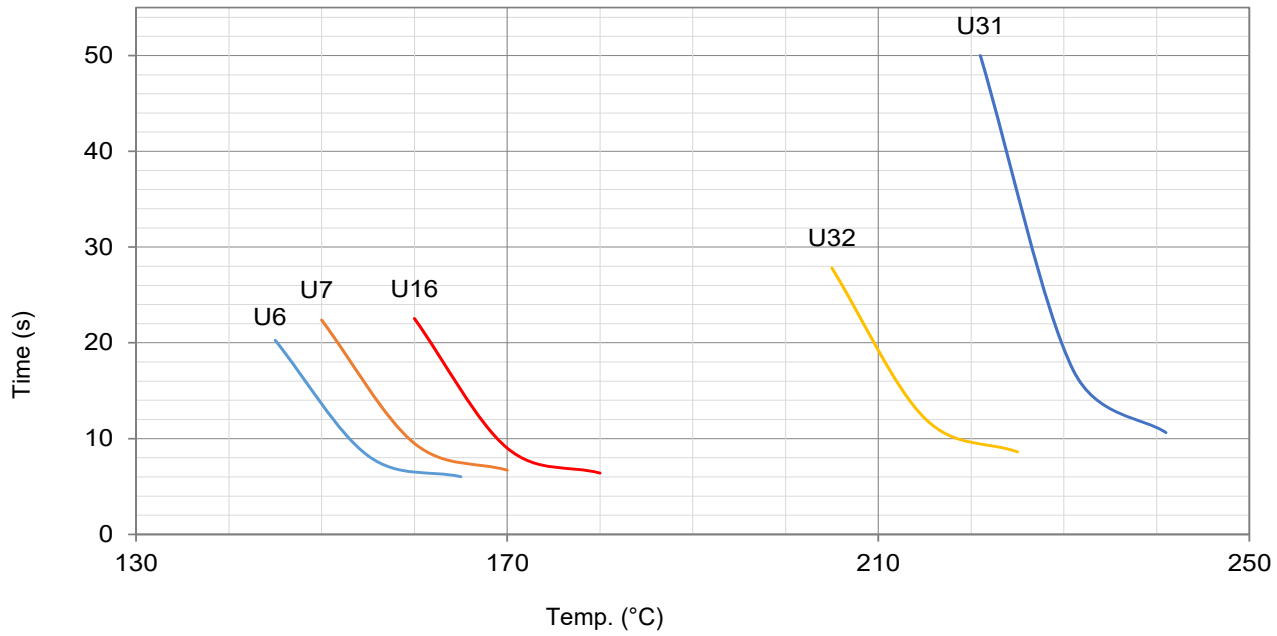

All Rights Reserved by Xiamen SET Electronics Co., Ltd. 2024-2026 V1.1

Product Current-Time Curve (Reference)

The Current-Time Curve shows functioning time at multi-times rated current at room temperature 25 ± 2 °C.

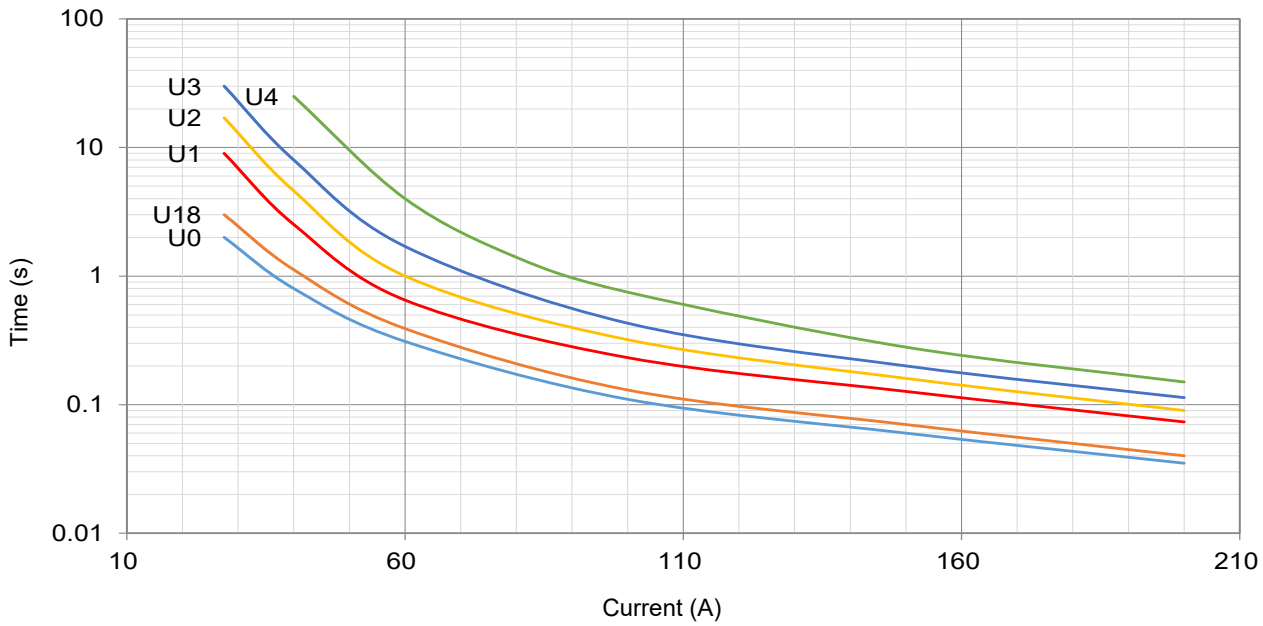

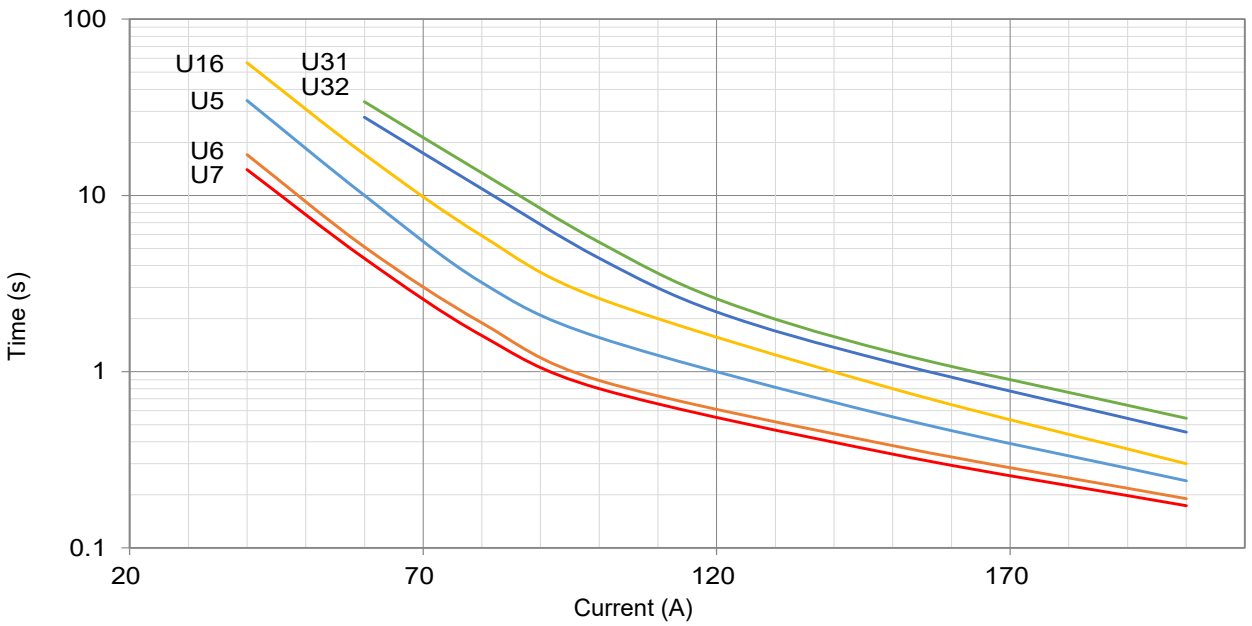

All Rights Reserved by Xiamen SET Electronics Co., Ltd. 2024-2026 V1.1

Packaging Information

Bulk

Item	PE Bag	PE Bag	Carton
Dimensions (mm)	135 × 85	190 × 180	440 × 300 × 260
Quantity (PCS)	50	300	12000
Gross Weight (kg)			16.0 ± 10%

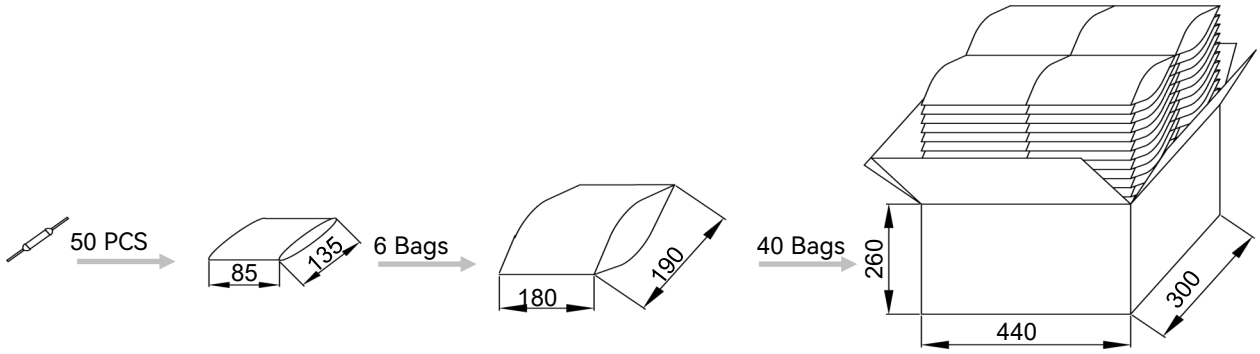

Taping

Item	**Scroll**	Box	Carton
Dimensions (mm)	Φ 250 × 94	258 × 258 × 98	480 × 300 × 260
Quantity (PCS)	2000	2000	8000
Gross Weight (kg)			10.5 ± 10%

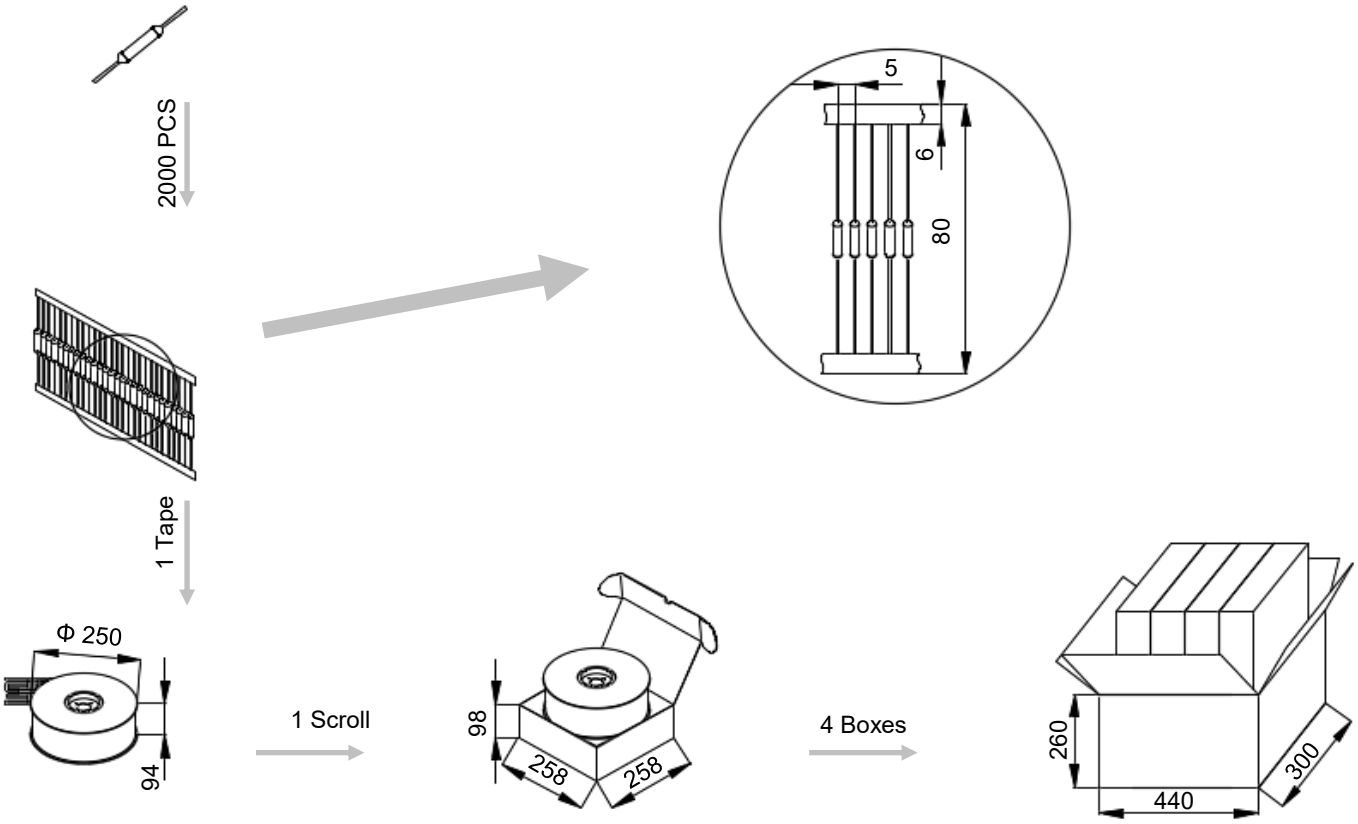

All Rights Reserved by Xiamen SET Electronics Co., Ltd. 2024-2026 V1.1

Part Numbering System

ATCO - U 2 - A N N A B - 001

Other Options

Packing

B	Bulk
T	Taping

Leads Forming

A	Straight Lead
B	Single Lead Bending
C	Leads Bending
D	Leads Kinking
E	Leads Bending and Kinking

Color of Insulation Tube

W	White
Y	Yellow
R	Red
K	Black
N	None

Insulation Tube Material

T	Teflon
P	Polyester
N	None

Lead Wire Type

A	Tinned Copper Wire
B	Tinned Copper Plated Wire

Rated Functioning Temp.

2	115 °C, See Specifications

Series

U	Series See Specifications

Product Category

ATCO	Alloy Thermal-Link

All Rights Reserved by Xiamen SET Electronics Co., Ltd. 2024-2026 V1.1

Thermal-Link (ATCO)-Alloy Type

R Series

Description

Alloy Thermal-Link / Alloy Thermal Cutoff (ATCO) is defined as a non-resettable protective device functioning one time only. It is widely used in electrical equipment. ATCO is mainly consist of fusible alloy, flux resin, case, sealant and lead wires. Normally, fusible alloy is jointed to the two lead wires. Under abnormal conditions, when the temp. reaches to the fusing temp. of ATCO, the fusible alloy melts and quickly retracts to the two lead wire ends with the aid of the flux resin and disconnects the circuit completely.

SETsafe | SETfuse Alloy Thermal-Link (ATCO) R series Rated Functioning Temp. from 76 ℃ to 221 ℃, Rated Current: 15 A, safety certification Includes UL, cUL, TUV, PSE, CCC, and complies with RoHS and REACH.

Features

- Non-Resettable
- High Accuracy of Functioning Temp.
- RoHS & REACH Compliant

Applications

- Lamps
- Switched-Mode Power Supplies
- Home Electrical Appliances
- Transformers
- Motors
- Power Strips

Customization

- Other Temp.
- The Length of Lead Wires
- Taping Packing Available
- Lead Wires can be Insulated
- Tinned Copper Wires or CP Wires
- Leads Forming Types

Structure Diagrams

Axial

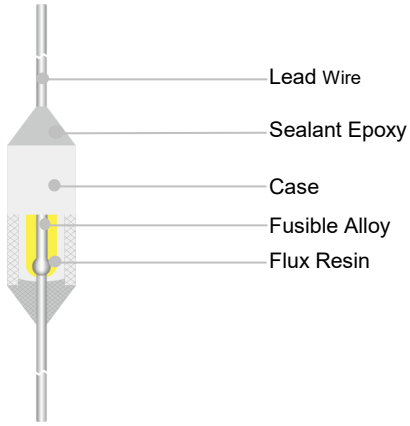

Marking

Axial (Color for reference only)

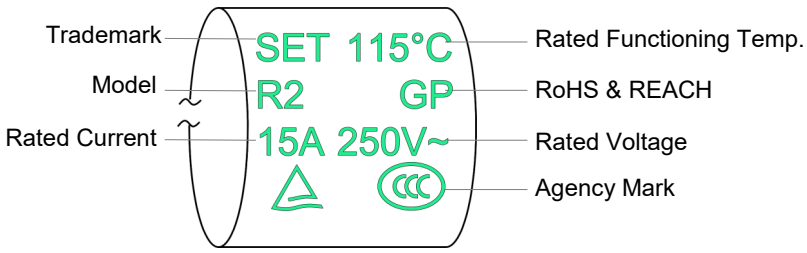

Dimensions (mm)

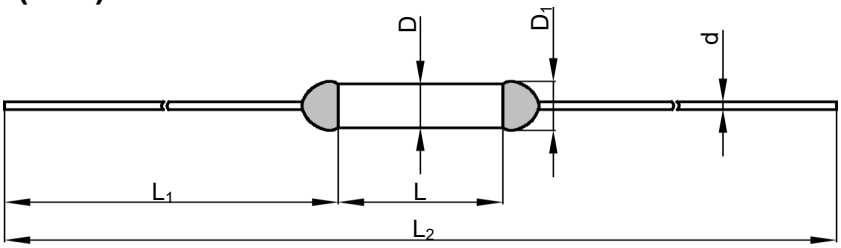

L	L_1	L_2	D	D_1	d
14.0 ± 0.5	33.0 ± 2.0	80.0 ± 3.0	4.0 ± 0.5	≤ 4.5	1.20 ± 0.05

All Rights Reserved by Xiamen SET Electronics Co., Ltd. 2024-2026 V1.1

Specifications

Rated Functioning Temp. (T_f) °C

	Model	Fusing Temp. (°C)	T_h (°C)	T_m (°C)	I_r (A)	U_r (V)	I_n 8 / 20 μs (15 Times) (kA)	I_{max} 8 / 20 μs (1 Time) (kA)	UL	cUL	TUV	PSE	CCC	RoHS REACH
221	R31	218 ± 2	186	250	15	AC 250	7	14	●	●	●	○	●	●
			182[a]			DC 60	7	14	○	○	●	○	●	●
205	R32	199 ± 3	167	250	15	AC 250	7	14	○	○	●	○	●	●
			163[a]			DC 60	7	14	○	○	●	○	●	●
160	R16	155 ± 2	130	200	15	AC 250	6	12	○	○	●	●	●	●
			126[a]			DC 60	6	12	○	○	●	○	●	●
150	R7	145 ± 2	120	200	15	AC 250	6	12	○	○	●	●	●	●
			116[a]			DC 60	6	12	○	○	●	○	●	●
145	R6	140 ± 2	115	200	15	AC 250	6	12	○	○	●	●	●	●
			111[a]			DC 60	6	12	○	○	●	○	●	●
135	R5	130 ± 2	105	200	15	AC 250	6	12	●	●	●	●	●	●
			101[a]			DC 60	6	12	○	○	●	○	●	●
130	R4	125 ± 2	100	200	15	AC 250	6	12	○	○	●	●	●	●
			96[a]			DC 60	6	12	○	○	●	○	●	●
125	R3	121 ± 2	95	200	15	AC 250	6	12	○	○	●	●	●	●
			91[a]			DC 60	6	12	○	○	●	○	●	●
115	R2	111 ± 2	85	200	15	AC 250	6	12	●	●	●	●	●	●
			81[a]			DC 60	6	12	○	○	●	○	●	●
102	R1	98 ± 3	72	200	15	AC 250	6	12	○	○	●	●	●	●
			68[a]			DC 60	6	12	○	○	●	○	●	●
86	R18	81 ± 3	51	200	15	AC 250	5	10	○	○	●	○	●	●
			43[a]			DC 60	5	10	○	○	●	○	●	●
76	R0	73 ± 2	43	200	15	AC 250	5	10	●	●	●	○	●	●
			39[a]			DC 60	5	10	●	●	●	○	●	●

Note:

1: "●"Means certificated, "○"Means non-certificated.

2: RoHS & REACH Compliant .

3: " a ": The temperature measurement point for holding temperature (T_h) shall be positioned 50 mm away from the product body, in accordance with the requirements specified in Appendix H.11.2 of IEC 60691:2015 and Appendix I of GB/T 9816.1-2023.

All Rights Reserved by Xiamen SET Electronics Co., Ltd. 2024-2026 V1.1

Agency Information

Institution	Standards	The File No. and certification No. obtained by SETsafe | SETfuse
	UL 60691	E214712
	CAN-CSA-E60691	E214712
	EN 60691	R50207621
	J60691	JET2121-32001-2029、JET2121-32001-2030 JET2121-32001-2031
	GB 9816.1	2020980205000193

Soldering

Hand-Soldering

1. Soldering should be carried out according to Table R-1.
2. The thermal element of ATCO is fusible alloy with low melting point, which is jointed with ATCO lead wires. Improper soldering operation (too high soldering temp. , too long soldering time, too short lead wire etc.) may transfer more heat to the thermal element and ATCO may open in advance.
3. When soldering conditions are more severe than those listed in Table R-1, a heat sink fixture should be used between soldering point and ATCO body.
4. When soldering, please do not pull / push or twist ATCO body or lead wires.
5. After soldering, let it naturally cool for longer than 20 seconds. During cooling, never move the ATCO body or lead wires.

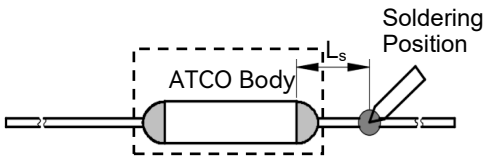

FIGURE R-1

TABLE R-1 Hand-Soldering Time

Rated Functioning Temp. (T_f)	Max. Allowable Soldering Time for Different Lead Wire Length (Fig.R-1)									Max. Soldering Temp.
	L_s Length	Time		L_s Length	Time		L_s Length	Time		
		Tinned Copper Wire	CP Wire		Tinned Copper Wire	CP Wire		Tinned Copper Wire	CP Wire	
(°C)	(mm)	(s)	(s)	(mm)	(s)	(s)	(mm)	(s)	(s)	(°C)
76 to 101	10	1[a]	4	20	2	5	30	3	6	400
102 to 115	10	1[a]	4	20	2	5	30	3	6	
116 to 135	10	1[a]	4	20	3	6	30	5	8	
136 to 150	10	3	6	20	5	8	30	5	8	
151 to 221	10	4	7	20	6	9	30	7	10	

Note:
a: Auxiliary Heat Sink Fixture is Required to Avoid ATCO Cutting off Unexpectedly.

All Rights Reserved by Xiamen SET Electronics Co., Ltd. 2024-2026 V1.1

Wave Soldering

The wave soldering parameters as Table R-2, for reference only, when ATCO is for practice use, you need to do some validation experiments. For example, using X-RAY to see the fusible alloy of ATCO whether damage after wave soldering.

TABLE R-2 Wave Soldering Parameters Setting

Rated Functioning Temp. (T_f)	Max. Allowable Preheating Temp. When the Length of Lead Wire is Different (Fig.R-1)				Preheating Time (t_1)	Max. Wave Soldering Temp.	Dwelling Time (t_2)	Cooling Time (t_3)
	L_s Length	Preheating Temp.	L_s Length	Preheating Temp.				
(°C)	(mm)	(°C)	(mm)	(°C)	(s)	(°C)	(s)	(s)
76 to 130	Recommend Hand-Soldering							
131 to 150	20	80	30	90	< 60	≤ 260	≤ 3	≤ 10
151 to 221	20	90	30	100	< 60	≤ 260	≤ 3	≤ 10

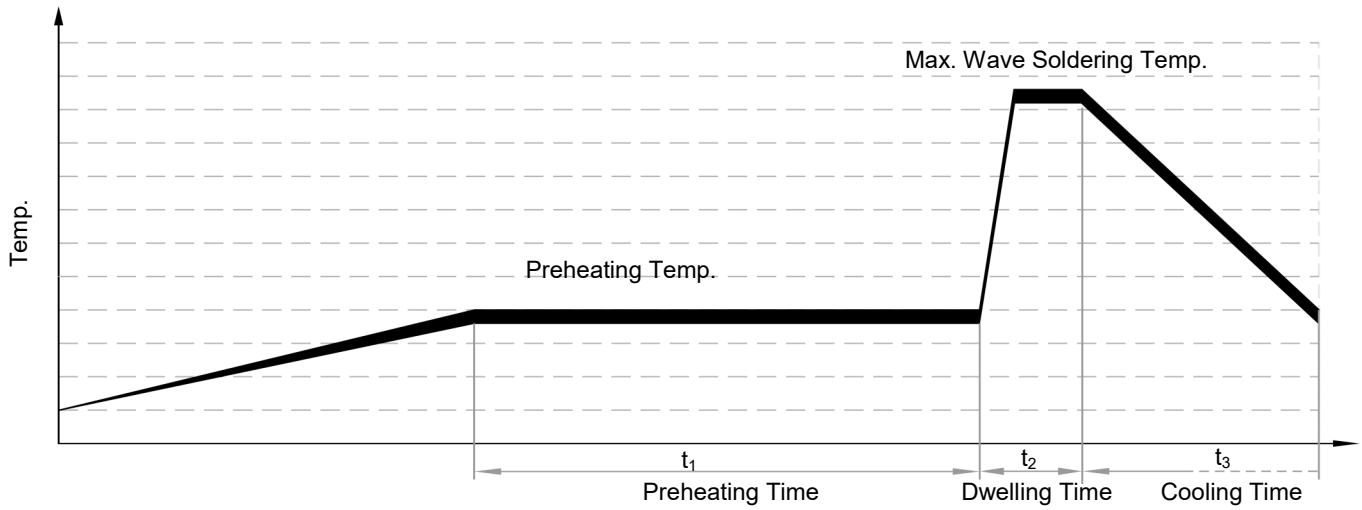

All Rights Reserved by Xiamen SET Electronics Co., Ltd. 2024-2026 V1.1

Product Temp.-Time Curve (Reference)

The Temp.-Time Curve of Thermal-Link in different temp. oil bath.

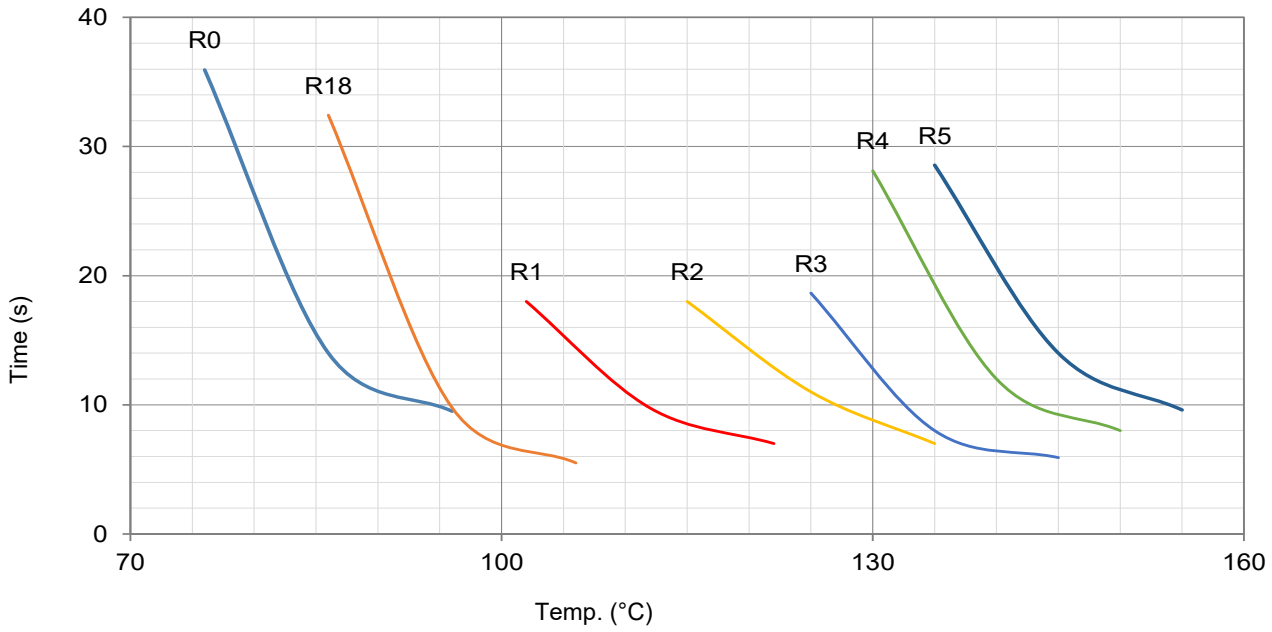

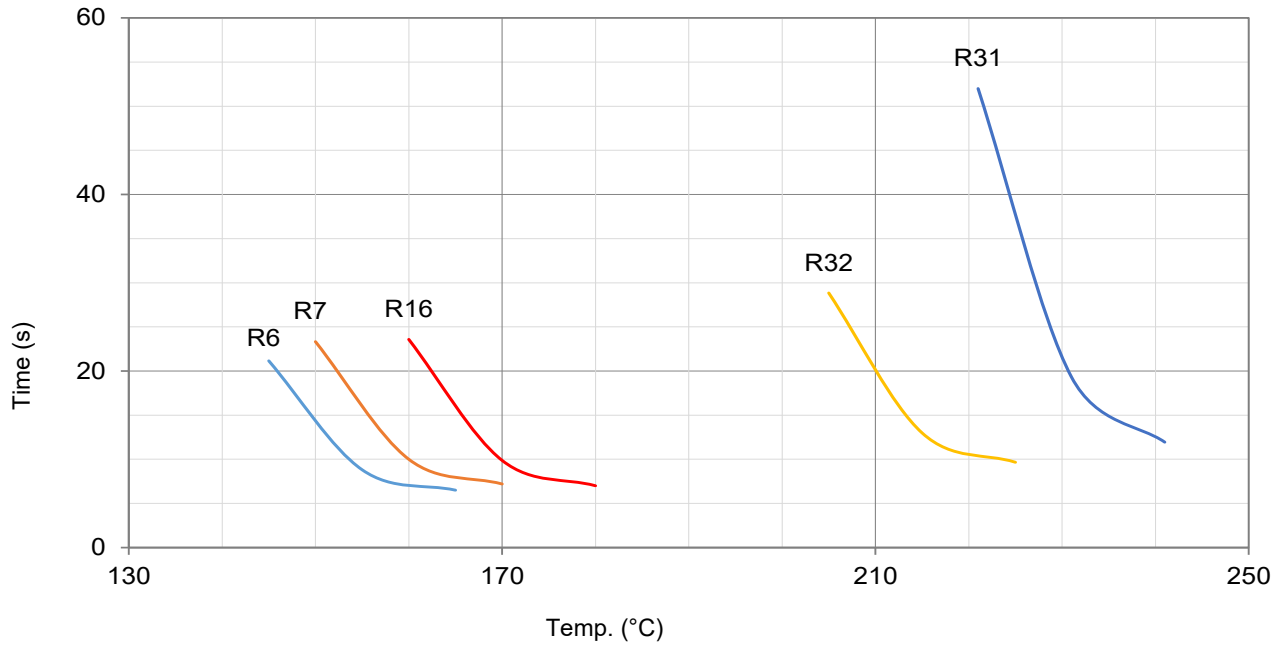

All Rights Reserved by Xiamen SET Electronics Co., Ltd. 2024-2026 V1.1

Product Current-Time Curve (Reference)

The Current-Time Curve shows functioning time at multi-times rated current at room temperature 25 ± 2 °C.

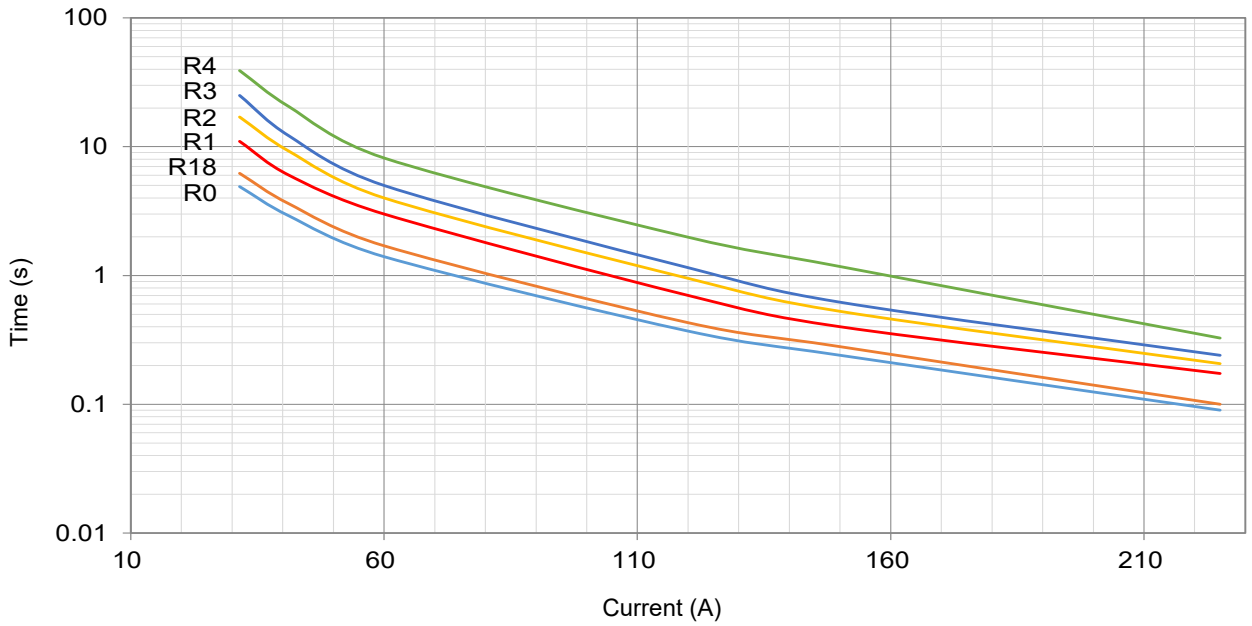

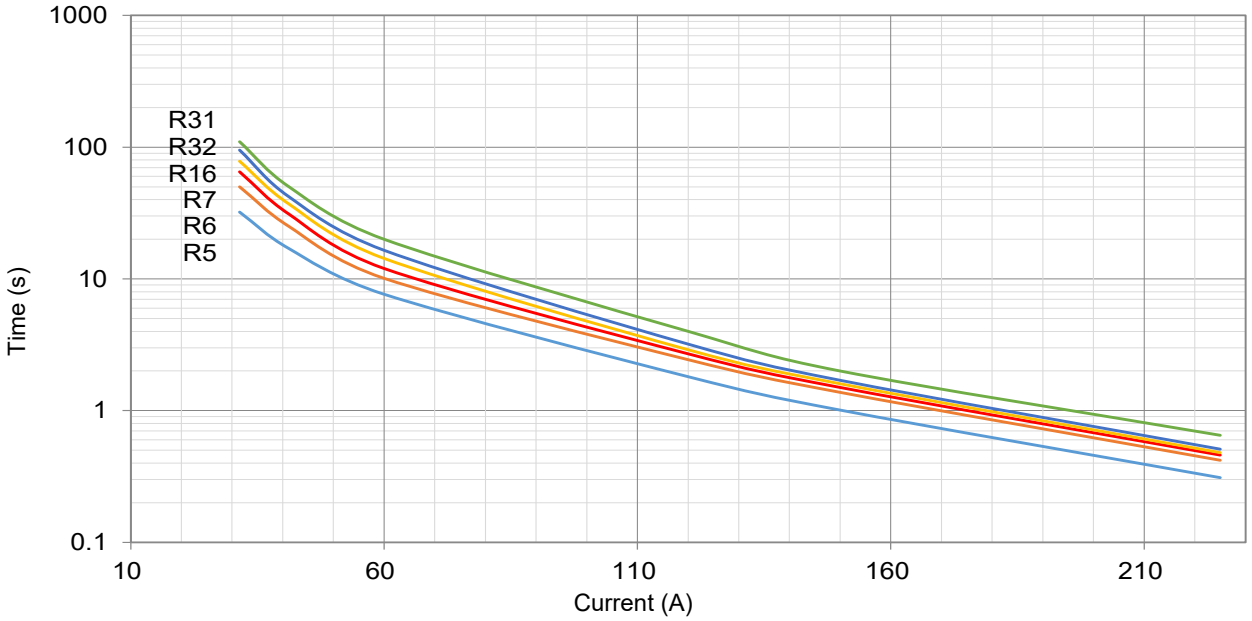

All Rights Reserved by Xiamen SET Electronics Co., Ltd. 2024-2026 V1.1

Packaging Information

Bulk

Item	PE Bag	PE Bag	Carton
Dimensions (mm)	135 × 85	190 × 180	440 × 300 × 260
Quantity (PCS)	50	300	12000
Gross Weight (kg)			16.0 ± 10%

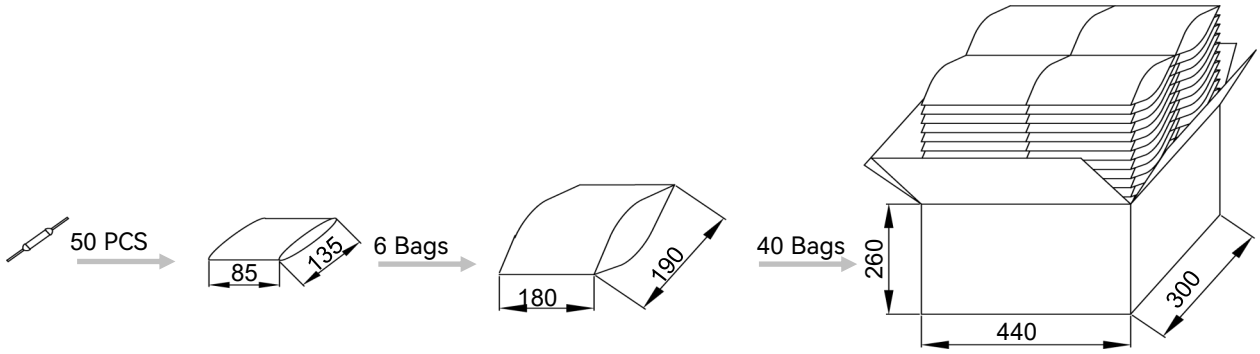

Taping

Item	**Scroll**	Box	Carton
Dimensions (mm)	Φ 250 × 94	258 × 258 × 98	480 × 300 × 260
Quantity (PCS)	2000	2000	8000
Gross Weight (kg)			10.5 ± 10%

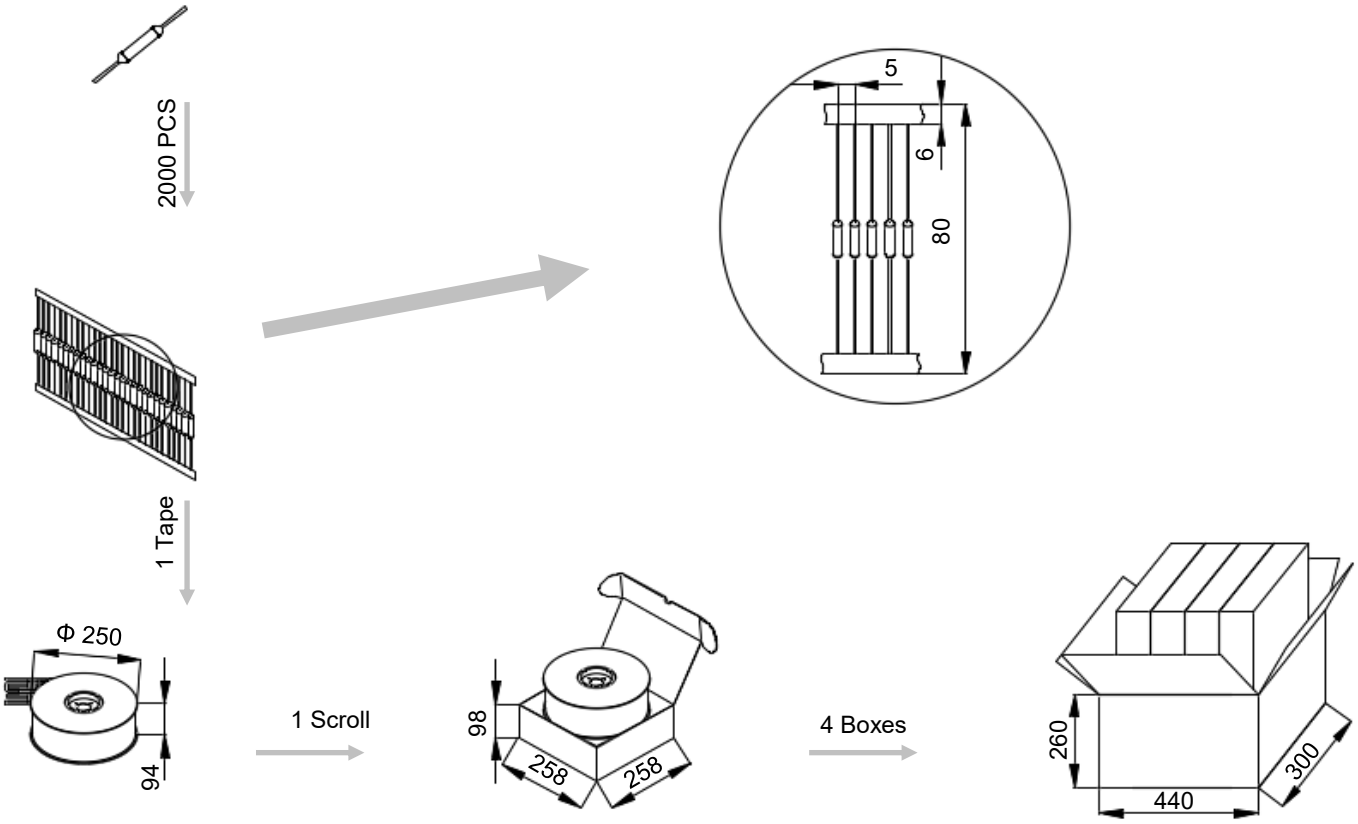

All Rights Reserved by Xiamen SET Electronics Co., Ltd. 2024-2026 V1.1

Part Numbering System

ATCO - R 2 - A N N A B - 001

Other Options

Packing

B	Bulk
T	Taping

Leads Forming

A	Straight Lead
B	Single Lead Bending
C	Leads Bending
D	Leads Kinking
E	Leads Bending and Kinking

Color of Insulation Tube

W	White
Y	Yellow
R	Red
K	Black
N	None

Insulation Tube Material

T	Teflon
P	Polyester
N	None

Lead Wire Type

A	Tinned Copper Wire
B	Tinned Copper Plated Wire

Rated Functioning Temp.

2	115 °C, See Specifications

Series

R	Series See Specifications

Product Category

ATCO	Alloy Thermal-Link

All Rights Reserved by Xiamen SET Electronics Co., Ltd. 2024-2026 V1.1

Thermal-Link (ATCO)-Alloy Type

CR Series

Description

Alloy Thermal-Link / Alloy Thermal Cutoff (ATCO) is defined as a non-resettable protective device functioning one time only. It is widely used in electrical equipment. ATCO is mainly consist of fusible alloy, flux resin, case, sealant and lead wires. Normally, fusible alloy is jointed to the two lead wires. Under abnormal conditions, when the temp. reaches to the fusing temp. of ATCO, the fusible alloy melts and quickly retracts to the two lead wire ends with the aid of the flux resin and disconnects the circuit completely.

SETsafe | SETfuse Alloy Thermal-Link (ATCO) CR series Rated Functioning Temp. 139 ℃, Rated Current: 15 A, safety certification Includes UL, cUL, TUV, and complies with RoHS and REACH.

Features

- Non-Resettable
- High Accuracy of Functioning Temp.
- RoHS & REACH Compliant

Applications

- Lamps
- Switched-Mode Power Supplies
- Home Electrical Appliances
- Transformers
- Motors
- Power Strips

Customization

- Other Temp.
- The Length of Lead Wires
- Taping Packing Available
- Lead Wires can be Insulated
- Tinned Copper Wires or CP Wires
- Leads Forming Types

Structure Diagrams

Axial

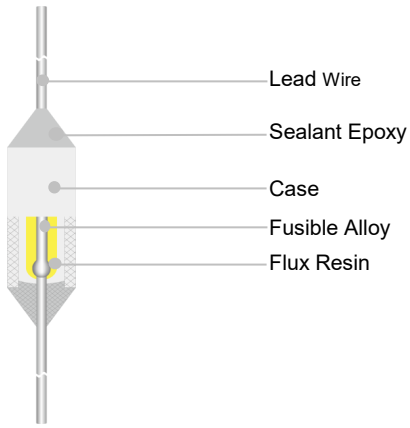

Marking

Axial (Color for reference only)

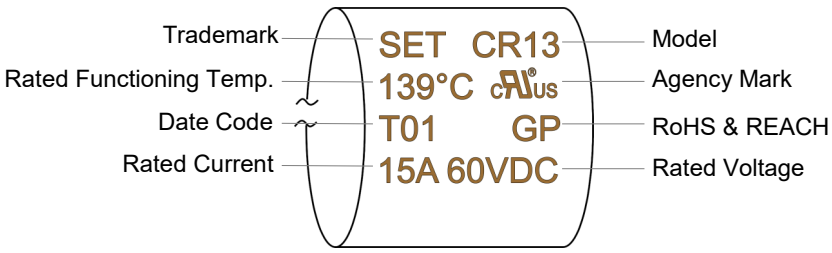

Remark: The first letter of the Date Code Year/quarter A stands for 2000, B stands for 2001, 01 stands for the first quarter, 02 stands for the second quarter, and so on.

Dimensions (mm)

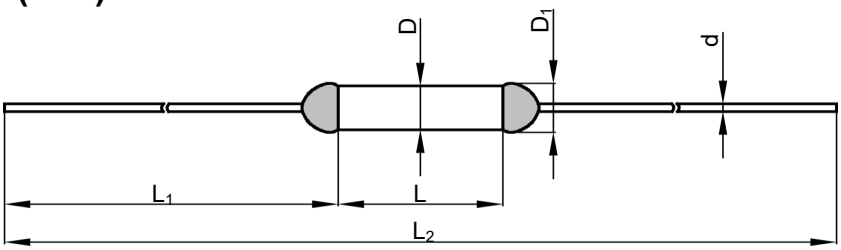

L	L_1	L_2	D	D_1	d
11.5 ± 0.5	34.0 ± 2.0	79.5 ± 3.0	3.3 ± 0.5	≤ 3.8	1.00 ± 0.05

All Rights Reserved by Xiamen SET Electronics Co., Ltd. 2024-2026 V1.1

Specifications

Rated Functioning Temp. (T_f) °C

	Model	Fusing Temp.	T_h	T_m	I_r	U_r	I_n 8 / 20 μs (15 Times)	I_{max} 8 / 20 μs (1 Time)	UL	cUL	TUV	RoHS REACH
		(°C)	(°C)	(°C)	(A)	(V)	(kA)	(kA)	UL	cUL	TUV	
139	CR13	135 ± 2	85	200	15	DC 60	6	12	●	●	●	●

Note:

1: "●"Means certificated, "○"Means non-certificated, RoHS & REACH Compliant .

2: " * "Customizable DC voltage.

All Rights Reserved by Xiamen SET Electronics Co., Ltd. 2024-2026 V1.1

Agency Information

Institution	Standards	The File No. and certification No. obtained by SETsafe | SETfuse
	UL 60691	E214712
	CAN-CSA-E60691	E214712
	EN 60691	R50415812

Soldering

Hand-Soldering

1. Soldering should be carried out according to Table CR-1.
2. The thermal element of ATCO is fusible alloy with low melting point, which is jointed with ATCO lead wires. Improper soldering operation (too high soldering temp. , too long soldering time, too short lead wire etc.) may transfer more heat to the thermal element and ATCO may open in advance.
3. When soldering conditions are more severe than those listed in Table CR-1, a heat sink fixture should be used between soldering point and ATCO body.
4. When soldering, please do not pull / push or twist ATCO body or lead wires.
5. After soldering, let it naturally cool for longer than 20 seconds. During cooling, never move the ATCO body or lead wires.

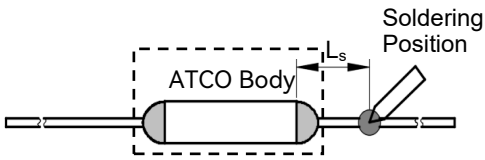

FIGURE CR-1

TABLE CR-1 Hand-Soldering Time

Rated Functioning Temp. (T_f)	Max. Allowable Soldering Time for Different Lead Wire Length (Fig.CR-1)									Max. Soldering Temp.
	L_s Length	Time		L_s Length	Time		L_s Length	Time		
		Tinned Copper Wire	CP Wire		Tinned Copper Wire	CP Wire		Tinned Copper Wire	CP Wire	
(°C)	(mm)	(s)	(s)	(mm)	(s)	(s)	(mm)	(s)	(s)	(°C)
139	10	3	6	20	5	8	30	5	8	400

Note:
a: Auxiliary Heat Sink Fixture is Required to Avoid ATCO Cutting off Unexpectedly.

All Rights Reserved by Xiamen SET Electronics Co., Ltd. 2024-2026 V1.1

Wave Soldering

The wave soldering parameters as Table CR-2, for reference only, when ATCO is for practice use, you need to do some validation experiments. For example, using X-RAY to see the fusible alloy of ATCO whether damage after wave soldering.

TABLE CR-2 Wave Soldering Parameters Setting

Rated Functioning Temp. (T_f)	Max. Allowable Preheating Temp. When the Length of Lead Wire is Different (Fig.CR-1)				Preheating Time (t_1)	Max. Wave Soldering Temp.	Dwelling Time (t_2)	Cooling Time (t_3)
	L_s Length	Preheating Temp.	L_s Length	Preheating Temp.				
(°C)	(mm)	(°C)	(mm)	(°C)	(s)	(°C)	(s)	(s)
139	20	80	30	90	< 60	≤ 260	≤ 3	≤ 10

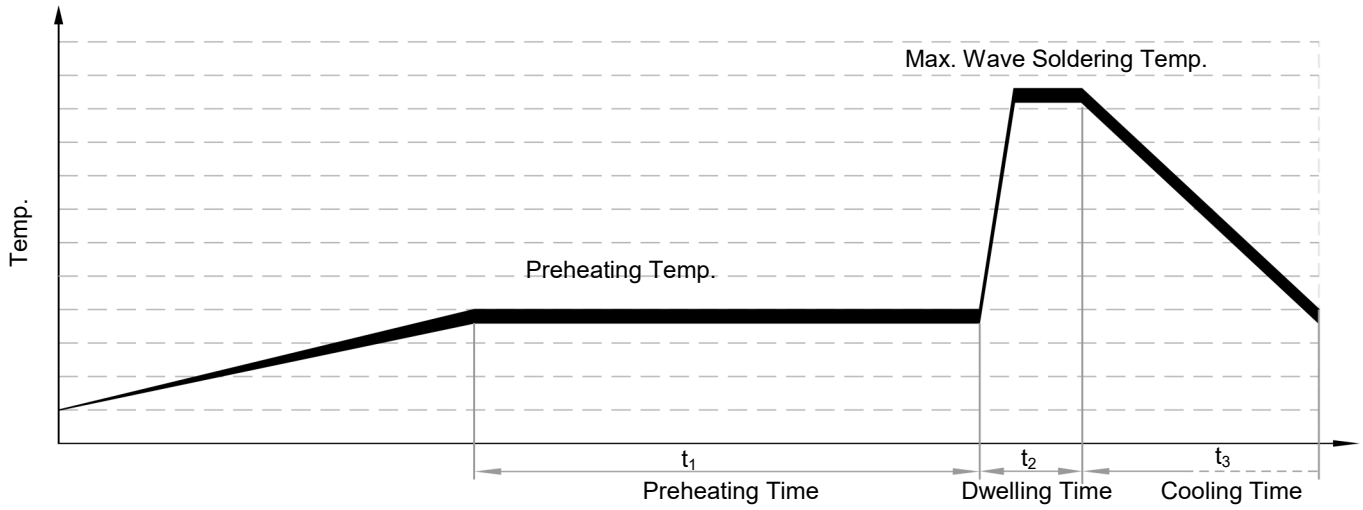

All Rights Reserved by Xiamen SET Electronics Co., Ltd. 2024-2026 V1.1

Product Temp.-Time Curve (Reference)

The Temp.-Time Curve of Thermal-Link in different temp. oil bath.

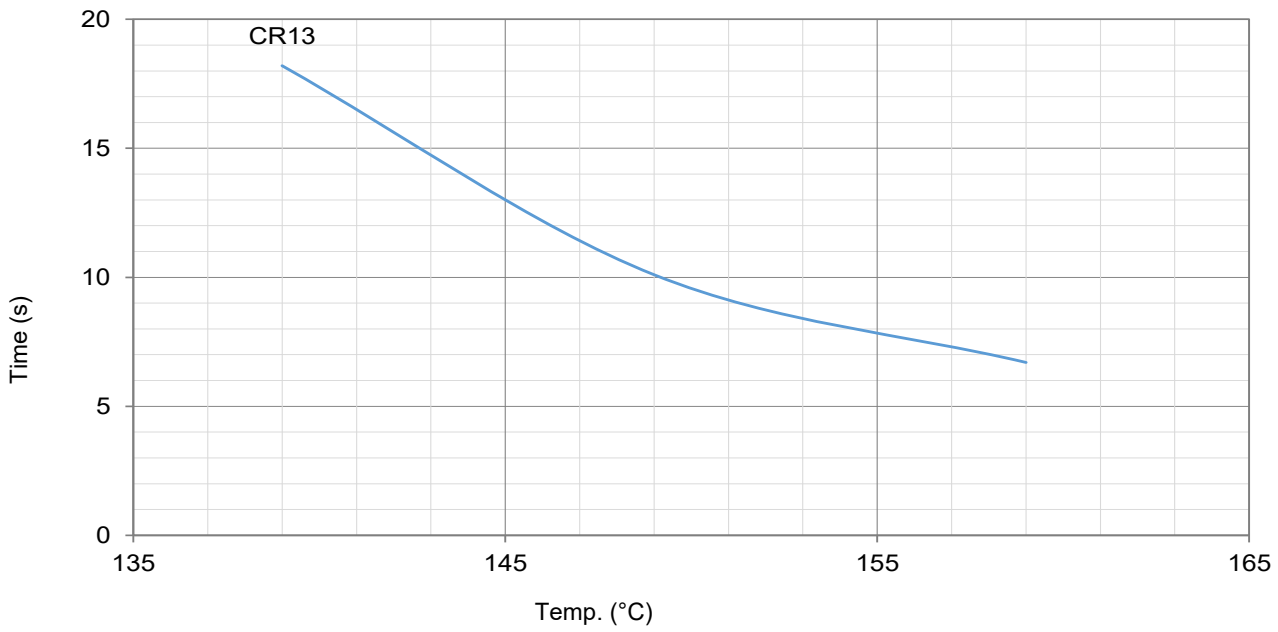

Product Current-Time Curve (Reference)

The Current-Time Curve shows functioning time at multi-times rated current at room temperature 25 ± 2 °C.

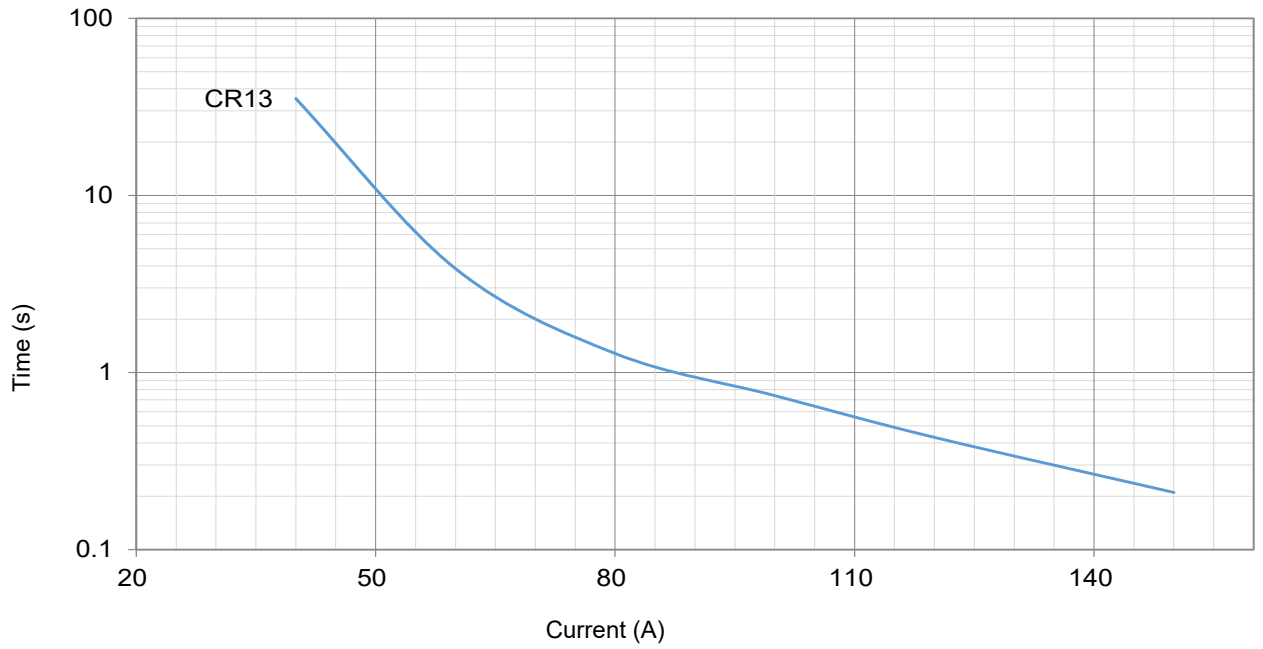

All Rights Reserved by Xiamen SET Electronics Co., Ltd. 2024-2026 V1.1

Packaging Information

Bulk

Item	PE Bag	PE Bag	Carton
Dimensions (mm)	135 × 85	190 × 180	440 × 300 × 260
Quantity (PCS)	100	1000	25000
Gross Weight (kg)			16.0 ± 10%

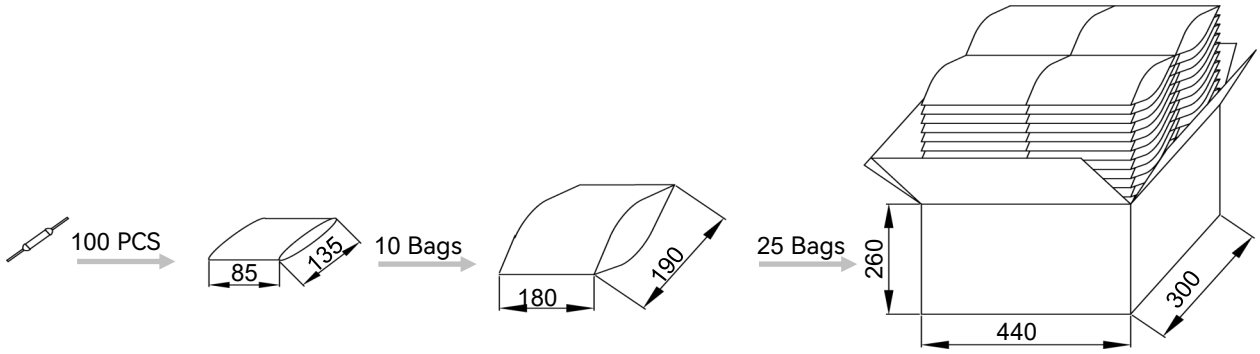

Taping

Item	**Scroll**	Box	Carton
Dimensions (mm)	Φ 250 × 94	258 × 258 × 98	480 × 300 × 260
Quantity (PCS)	2000	2000	8000
Gross Weight (kg)			12 ± 10%

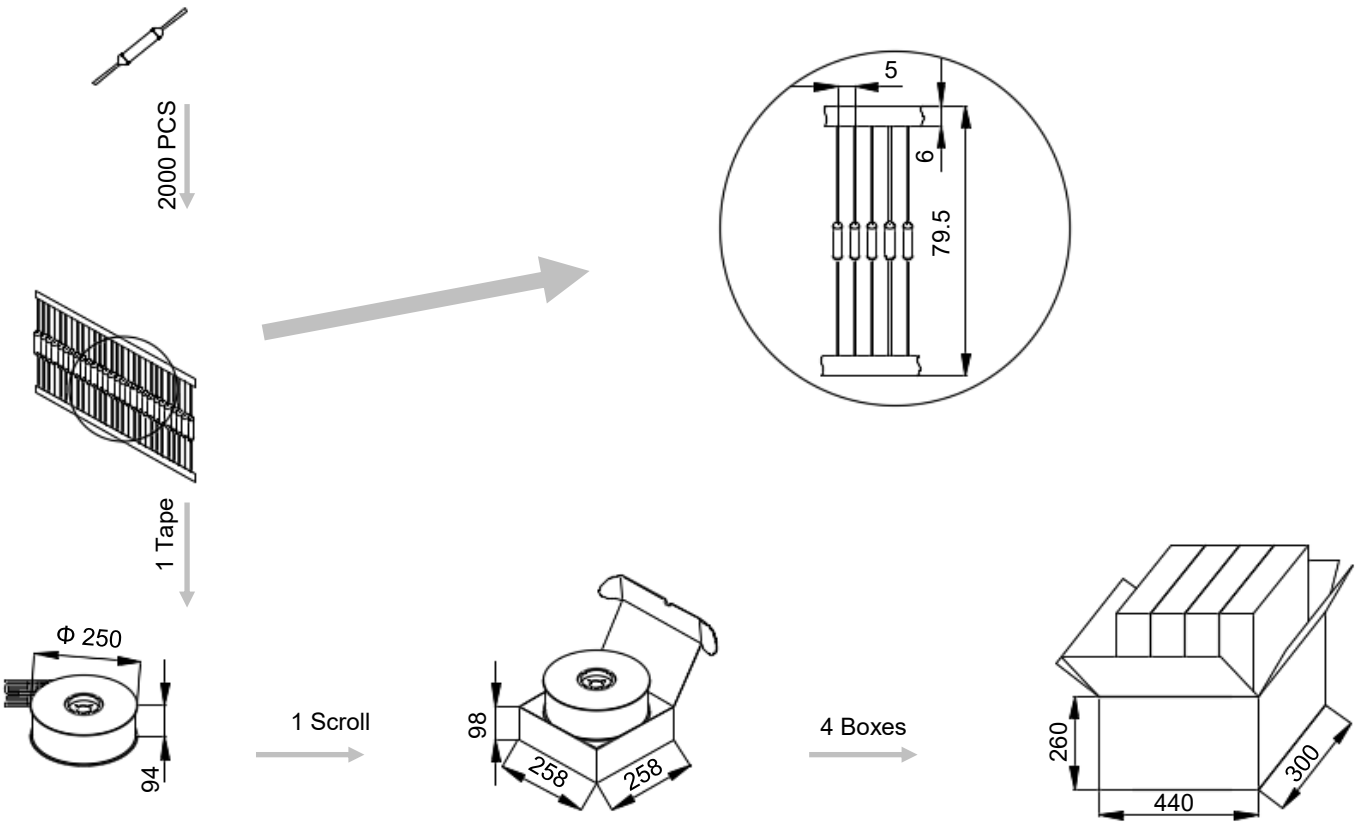

All Rights Reserved by Xiamen SET Electronics Co., Ltd. 2024-2026 V1.1

Part Numbering System

ATCO - CR 13 - A N N A B - 001

Other Options

Packing

B	Bulk
T	Taping

Leads Forming

A	Straight Lead
B	Single Lead Bending
C	Leads Bending
D	Leads Kinking
E	Leads Bending and Kinking

Color of Insulation Tube

W	White
Y	Yellow
R	Red
K	Black
N	None

Insulation Tube Material

T	Teflon
P	Polyester
N	None

Lead Wire Type

A	Tinned Copper Wire
B	Tinned Copper Plated Wire

Rated Functioning Temp.

13	139 °C, See Specifications

Series

CR	Series See Specifications

Product Category

ATCO	Alloy Thermal-Link

All Rights Reserved by Xiamen SET Electronics Co., Ltd. 2024-2026 V1.1

Thermal-Link (ATCO)-Alloy Type

HS Series

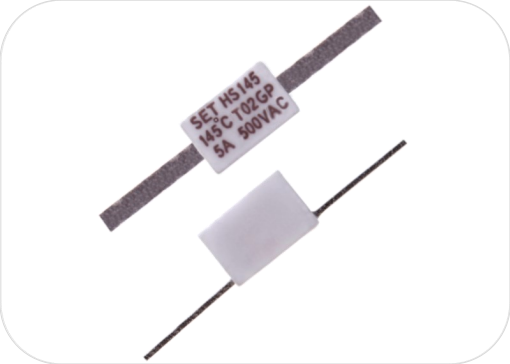

Description

Alloy Thermal-Link / Alloy Thermal Cutoff (ATCO) is defined as a non-resettable protective device functioning one time only. It is widely used in electrical equipment. ATCO is mainly consist of fusible alloy, flux resin, case, sealant and lead wires. Normally, fusible alloy is jointed to the two lead wires. Under abnormal conditions, when the temp. reaches to the fusing temp. of ATCO, the fusible alloy melts and quickly retracts to the two lead wire ends with the aid of the flux resin and disconnects the circuit completely.

SETsafe | SETfuse Alloy Thermal-Link (ATCO) HS series Rated Functioning Temp. from 125 ℃ to 145 ℃, Rated Current: 5 A, safety certification Includes UL, cUL, TUV, PSE, CCC, and complies with RoHS and REACH.

Features

- Non-Resettable
- High Accuracy of Functioning Temp.
- High Operating Voltage
- RoHS & REACH Compliant

Applications

- Surge Protective Devices
- Batteries
- Automobile Electronic

Customization

- Other Temp.
- The Length of Lead Wires
- Leads Forming Types

Structure Diagrams

Axial

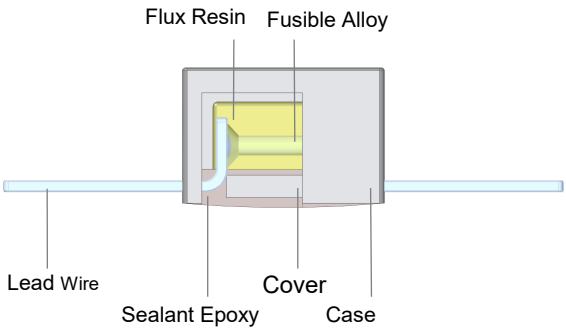

Marking

Axial (Color for reference only)

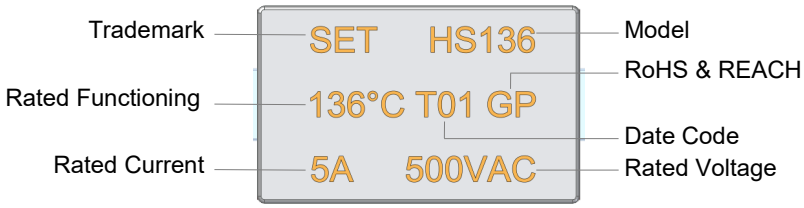

Remark: The first letter of the Date Code Year/quarter A stands for 2000, B stands for 2001, 01 stands for the first quarter, 02 stands for the second quarter, and so on.

Dimensions (mm)

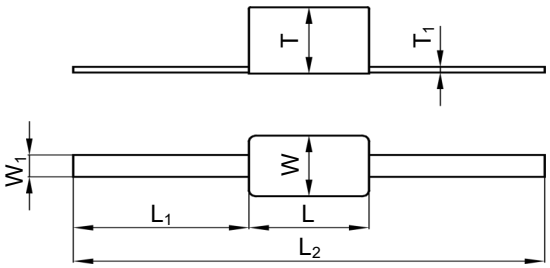

L	L_1	L_2	W	W_1	T	T_1
9.6 ± 1.0	30.0 ± 2.0	70.0 ± 3.0	6. 0 ± 1.0	2.0 ± 0.5	6.0 ± 1.0	0.50 ± 0.05

All Rights Reserved by Xiamen SET Electronics Co., Ltd. 2024-2026 V1.1

Specifications

Rated Functioning Temp. (T_f) °C	Model	Fusing Temp.	T_h	T_m	I_r	U_r	UL	cUL	TUV	PSE	CCC	RoHS REACH
		(°C)	(°C)	(°C)	(A)	(V)						
145	HS145	140 ± 2	118	250	5	AC 500	●	●	●	●	●	●
						DC 200	●	●	●	○	●	●
136	HS136	131 ± 3	111	250	5	AC 500	●	●	●	●	●	●
						DC 200	●	●	●	○	●	●
125	HS125	121 ± 2	98	250	5	AC 500	●	●	●	●	●	●
						DC 200	●	●	●	○	●	●

Note:

1: "●"Means certificated, "○"Means non-certificated, RoHS & REACH Compliant .

2: " * "Customizable DC voltage.

All Rights Reserved by Xiamen SET Electronics Co., Ltd. 2024-2026 V1.1

Agency Information

Institution	Standards	The File No. and certification No. obtained by SETsafe | SETfuse
	UL 60691	E214712
	CAN-CSA-E60691	E214712
	EN 60691	R50338012
	J60691	JET2121-32001-2024、JET2121-32001-2025
	GB 9816.1	2020980205000178

Soldering

Hand-Soldering

1. Soldering should be carried out according to Table HS-1.
2. The thermal element of ATCO is fusible alloy with low melting point, which is jointed with ATCO lead wires. Improper soldering operation (too high soldering temp. , too long soldering time, too short lead wire etc.) may transfer more heat to the thermal element and ATCO may open in advance.
3. When soldering conditions are more severe than those listed in Table HS-1, a heat sink fixture should be used between soldering point and ATCO body.
4. When soldering, please do not pull / push or twist ATCO body or lead wires.
5. After soldering, let it naturally cool for longer than 20 seconds. During cooling, never move the ATCO body or lead wires.

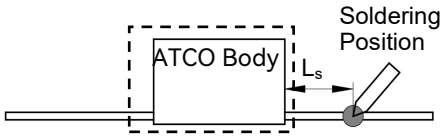

FIGURE HS-1

TABLE HS-1 Hand-Soldering Time

Rated Functioning Temp. (T_f)	Max. Allowable Soldering Time for Different Lead Wire Length (Fig.HS-1)									Max. Soldering Temp.
	L_s Length	Time		L_s Length	Time		L_s Length	Time		
		Tinned Copper Wire	CP Wire		Tinned Copper Wire	CP Wire		Tinned Copper Wire	CP Wire	
(°C)	(mm)	(s)	(s)	(mm)	(s)	(s)	(mm)	(s)	(s)	(°C)
125 to 135	10	1[a]	4	20	3	6	30	5	8	400
136 to 145	10	3	6	20	5	8	30	5	8	400

Note:
a: Auxiliary Heat Sink Fixture is Required to Avoid ATCO Cutting off Unexpectedly.

All Rights Reserved by Xiamen SET Electronics Co., Ltd. 2024-2026 V1.1

Wave Soldering

The wave soldering parameters as Table HS-2, for reference only, when ATCO is for practice use, you need to do some validation experiments. For example, using X-RAY to see the fusible alloy of ATCO whether damage after wave soldering.

TABLE HS-2 Wave Soldering Parameters Setting

Rated Functioning Temp. (T_f)	Max. Allowable Preheating Temp. When the Length of Lead Wire is Different (Fig.HS-1)				Preheating Time (t_1)	Max. Wave Soldering Temp.	Dwelling Time (t_2)	Cooling Time (t_3)
	L_s Length	Preheating Temp.	L_s Length	Preheating Temp.				
(°C)	(mm)	(°C)	(mm)	(°C)	(s)	(°C)	(s)	(s)
125 to 130	Recommend Hand-Soldering							
131 to 145	20	80	30	90	< 60	≤ 260	≤ 3	≤ 10

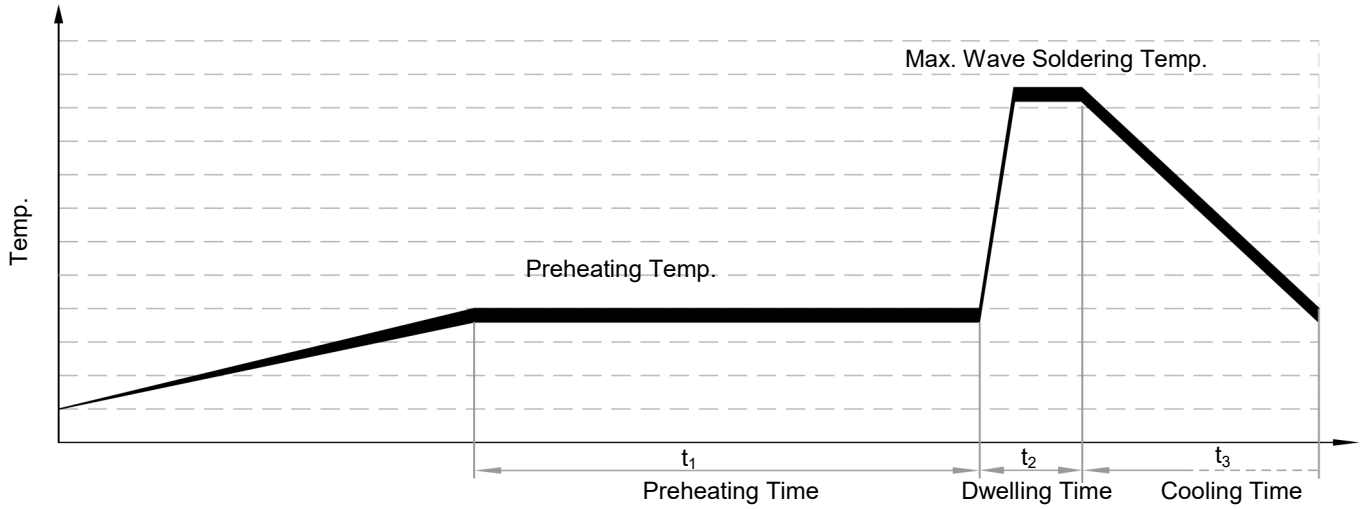

All Rights Reserved by Xiamen SET Electronics Co., Ltd. 2024-2026 V1.1

Product Temp.-Time Curve (Reference)

The Temp.-Time Curve of Thermal-Link in different temp. oil bath.

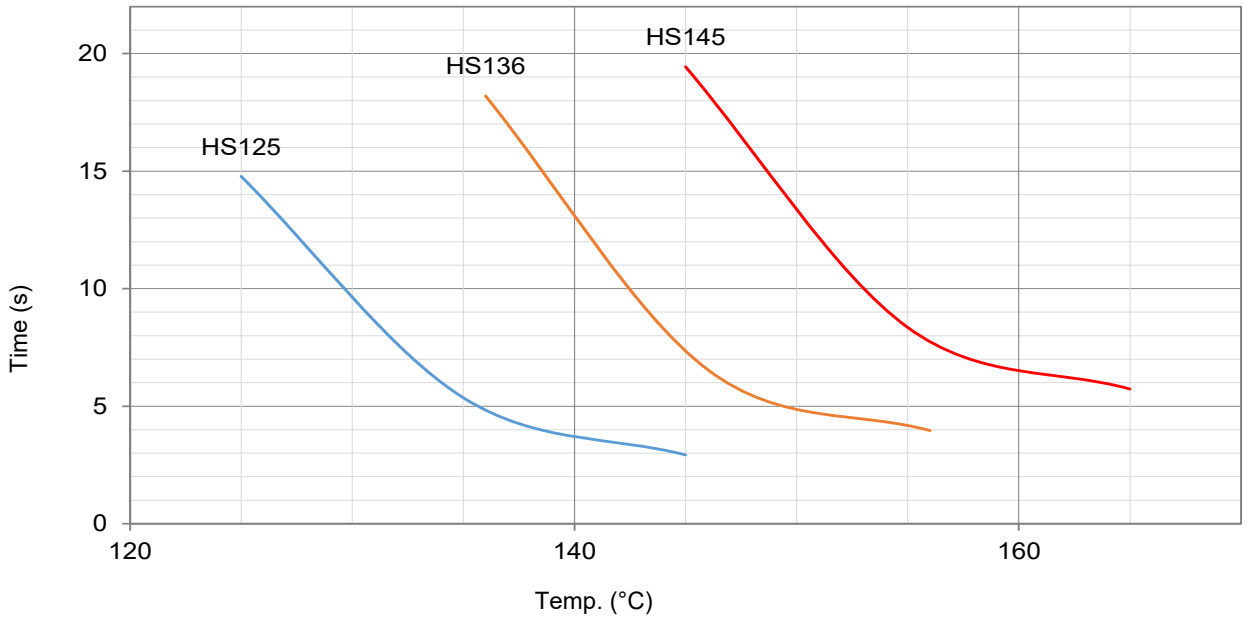

Product Current-Time Curve (Reference)

The Current-Time Curve shows functioning time at multi-times rated current at room temperature 25 ± 2 °C.

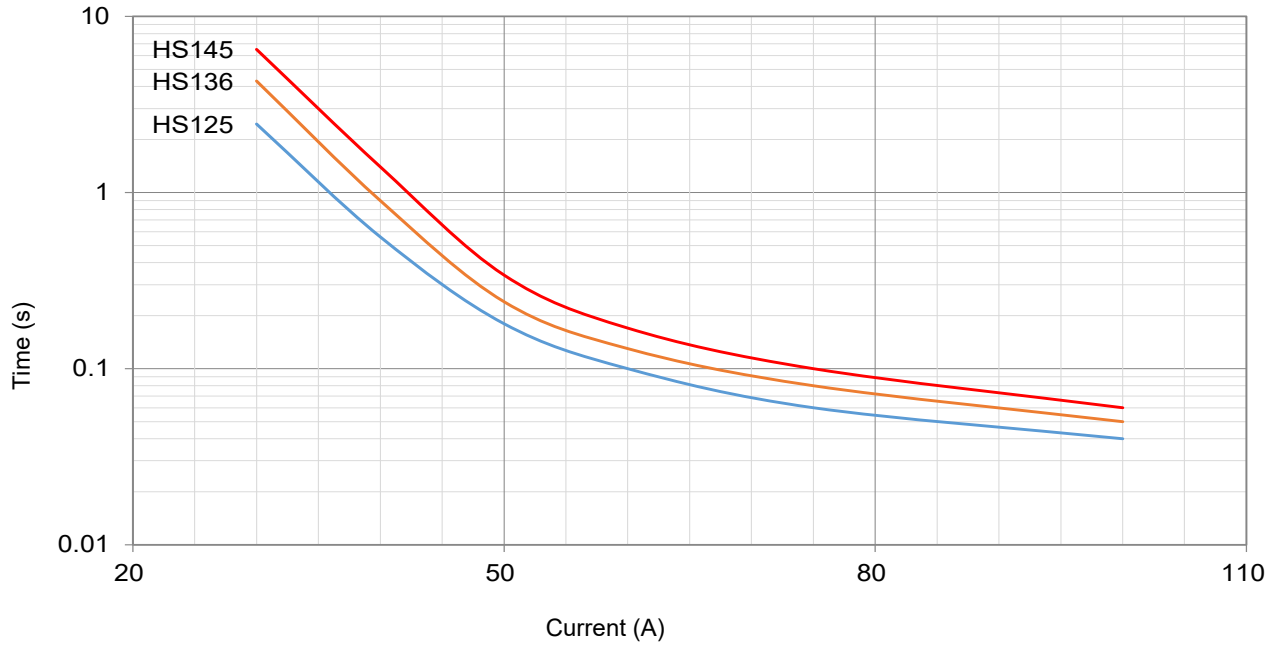

All Rights Reserved by Xiamen SET Electronics Co., Ltd. 2024-2026 V1.1

Packaging Information

Bulk

Item	PE Bag	Box	Carton
Dimensions (mm)	135 × 85	255 × 88 × 98	440 × 300 × 220
Quantity (PCS)	20	300	3000
Gross Weight (kg)			16.0 ± 10%

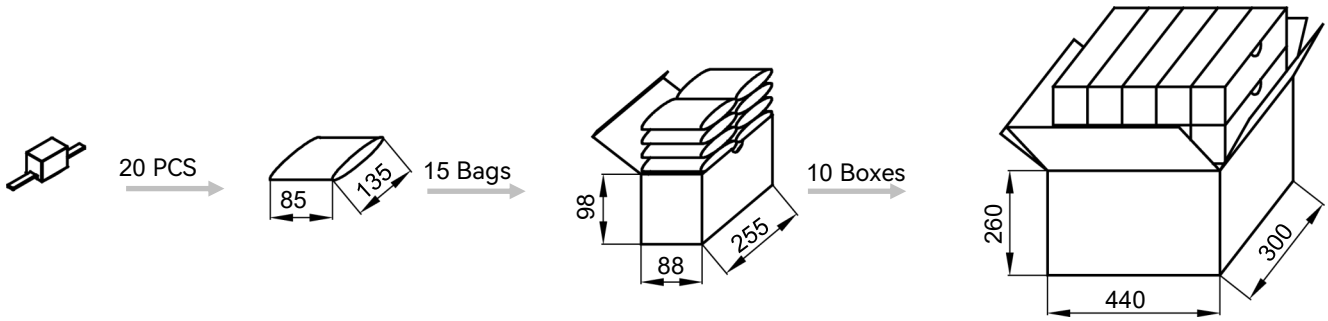

All Rights Reserved by Xiamen SET Electronics Co., Ltd. 2024-2026 V1.1

Part Numbering System

ATCO - HS136 - G N N A B - 001

Other Options

Packing

B	Bulk

Leads Forming

A	Straight Lead
B	Single Lead Bending
C	Leads Bending

Color of Insulation Tube

W	White
R	Red
K	Black
N	None

Insulation Tube Material

T	Teflon
P	Polyester
N	None

Lead Wire Type

G	Flat Electrode Chamber
M	Multi stranded tinned copper wire

Rated Functioning Temp.

136	136 °C, See Specifications

Series

HS	Series See Specifications

Product Category

ATCO	Alloy Thermal-Link

All Rights Reserved by Xiamen SET Electronics Co., Ltd. 2024-2026 V1.1

Thermal-Link (ATCO)-Alloy Type

HP Series

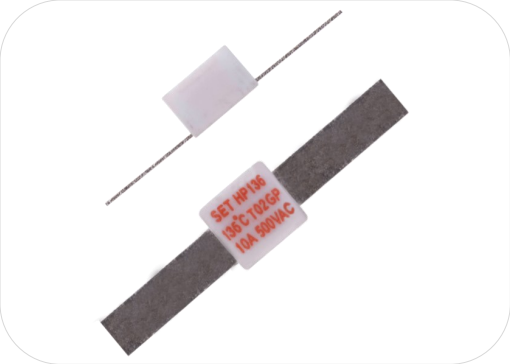

Description

Alloy Thermal-Link / Alloy Thermal Cutoff (ATCO) is defined as a non-resettable protective device functioning one time only. It is widely used in electrical equipment. ATCO is mainly consist of fusible alloy, flux resin, case, sealant and lead wires. Normally, fusible alloy is jointed to the two lead wires. Under abnormal conditions, when the temp. reaches to the fusing temp. of ATCO, the fusible alloy melts and quickly retracts to the two lead wire ends with the aid of the flux resin and disconnects the circuit completely.

SETsafe | SETfuse Alloy Thermal-Link (ATCO) HP series Rated Functioning Temp. from 125 ℃ to 145 ℃, Rated Current: 10 A, safety certification Includes UL, cUL, TUV, PSE, CCC, and complies with RoHS and REACH.

Features

- Non-Resettable
- High Accuracy of Functioning Temp.
- High Operating Voltage
- RoHS & REACH Compliant

Applications

- Surge Protective Devices
- Batteries
- Automobile Electronic

Customization

- Other Temp.
- The Length of Lead Wires
- Leads Forming Types

Structure Diagrams

Axial

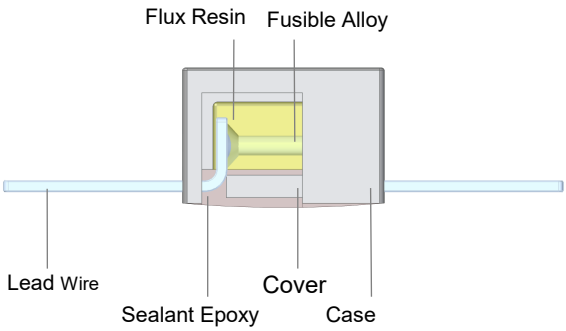

Marking

Axial (Color for reference only)

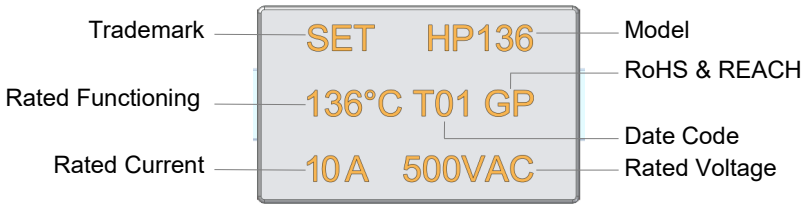

Remark: The first letter of the Date Code Year/quarter A stands for 2000, B stands for 2001, 01 stands for the first quarter, 02 stands for the second quarter, and so on.

Dimensions (mm)

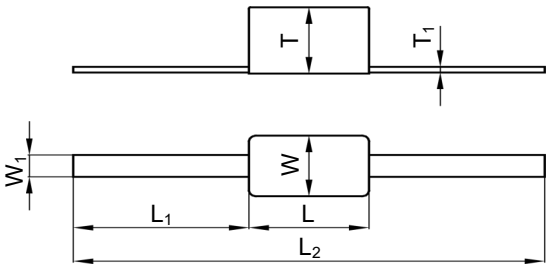

L	L_1	L_2	W	W_1	T	T_1
8.6 ± 1.0	30.0 ± 2.0	70.0 ± 3.0	7.6 ± 1.0	5.0 ± 0.5	6.0 ± 1.0	0.5 ± 0.1

All Rights Reserved by Xiamen SET Electronics Co., Ltd. 2024-2026 V1.1

Specifications

Rated Functioning Temp. (T_f) °C	Model	Fusing Temp.	T_h	T_m	I_r	U_r	UL	cUL	TUV	PSE	CCC	RoHS REACH
		(°C)	(°C)	(°C)	(A)	(V)						
145	HP145	140 ± 2	112 108[a]	250	10	AC 500	●	●	●	●	●	●
						DC 200	●	●	●	○	●	●
136	HP136	131 ± 3	106 102[a]	250	10	AC 500	●	●	●	●	●	●
						DC 200	●	●	●	○	●	●
125	HP125	121 ± 2	90 86[a]	250	10	AC 500	●	●	●	●	●	●
						DC 200	●	●	●	○	●	●

Note:

1: "●"Means certificated, "○"Means non-certificated, RoHS & REACH Compliant .

2: " * "Customizable DC voltage.

3: " a ": The temperature measurement point for holding temperature (T_h) shall be positioned 50 mm away from the product body, in accordance with the requirements specified in Appendix H.11.2 of IEC 60691:2015 and Appendix I of GB/T 9816.1-2023.

All Rights Reserved by Xiamen SET Electronics Co., Ltd. 2024-2026 V1.1

Agency Information

Institution	Standards	The File No. and certification No. obtained by SETsafe | SETfuse
	UL 60691	E214712
	CAN-CSA-E60691	E214712
	EN 60691	R50337988
	J60691	JET2121-32001-2030、JET2121-32001-2031
	GB 9816.1	2020980205000177

Soldering

Hand-Soldering

1. Soldering should be carried out according to Table HP-1.
2. The thermal element of ATCO is fusible alloy with low melting point, which is jointed with ATCO lead wires. Improper soldering operation (too high soldering temp. , too long soldering time, too short lead wire etc.) may transfer more heat to the thermal element and ATCO may open in advance.
3. When soldering conditions are more severe than those listed in Table HP-1, a heat sink fixture should be used between soldering point and ATCO body.
4. When soldering, please do not pull / push or twist ATCO body or lead wires.
5. After soldering, let it naturally cool for longer than 20 seconds. During cooling, never move the ATCO body or lead wires.

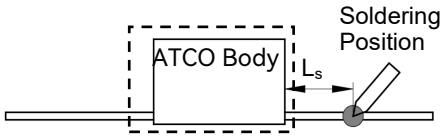

FIGURE HP-1

TABLE HP-1 Hand-Soldering Time

Rated Functioning Temp. (T_f)	Max. Allowable Soldering Time for Different Lead Wire Length (Fig.HP-1)									Max. Soldering Temp.
	L_s Length	Time		L_s Length	Time		L_s Length	Time		
		Tinned Copper Wire	CP Wire		Tinned Copper Wire	CP Wire		Tinned Copper Wire	CP Wire	
(°C)	(mm)	(s)	(s)	(mm)	(s)	(s)	(mm)	(s)	(s)	(°C)
125 to 135	10	1[a]	4	20	3	6	30	5	8	400
136 to 145	10	3	6	20	5	8	30	5	8	400

Note:
a: Auxiliary Heat Sink Fixture is Required to Avoid ATCO Cutting off Unexpectedly.

All Rights Reserved by Xiamen SET Electronics Co., Ltd. 2024-2026 V1.1

Wave Soldering

The wave soldering parameters as Table HP-2, for reference only, when ATCO is for practice use, you need to do some validation experiments. For example, using X-RAY to see the fusible alloy of ATCO whether damage after wave soldering.

TABLE HP-2 Wave Soldering Parameters Setting

Rated Functioning Temp. (T_f)	Max. Allowable Preheating Temp. When the Length of Lead Wire is Different (Fig.HP-1)				Preheating Time (t_1)	Max. Wave Soldering Temp.	Dwelling Time (t_2)	Cooling Time (t_3)
	L_s Length	Preheating Temp.	L_s Length	Preheating Temp.				
(°C)	(mm)	(°C)	(mm)	(°C)	(s)	(°C)	(s)	(s)
125 to 130	Recommend Hand-Soldering							
131 to 145	20	80	30	90	< 60	≤ 260	≤ 3	≤ 10

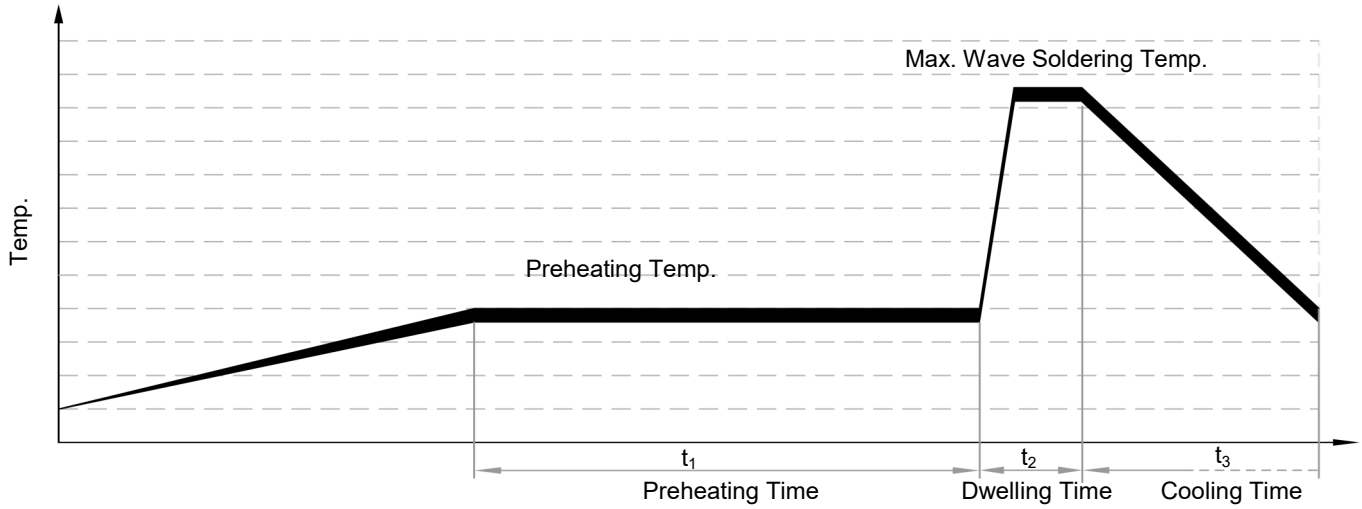

All Rights Reserved by Xiamen SET Electronics Co., Ltd. 2024-2026 V1.1

Product Temp.-Time Curve (Reference)

The Temp.-Time Curve of Thermal-Link in different temp. oil bath.

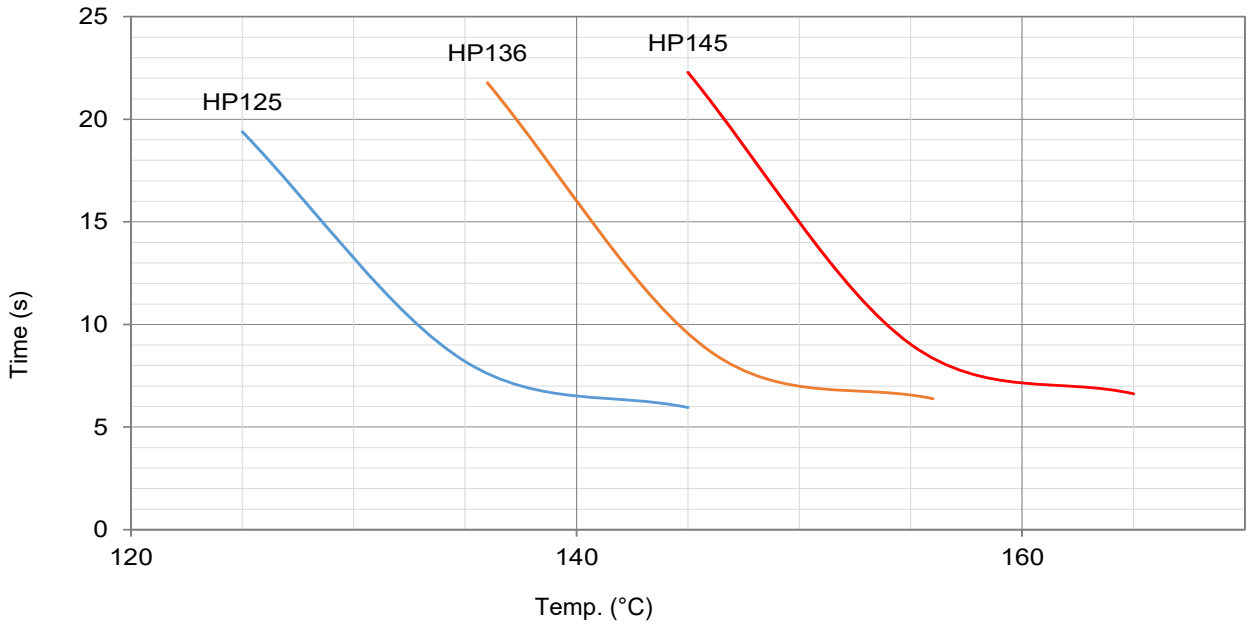

Product Current-Time Curve (Reference)

The Current-Time Curve shows functioning time at multi-times rated current at room temperature 25 ± 2 °C.

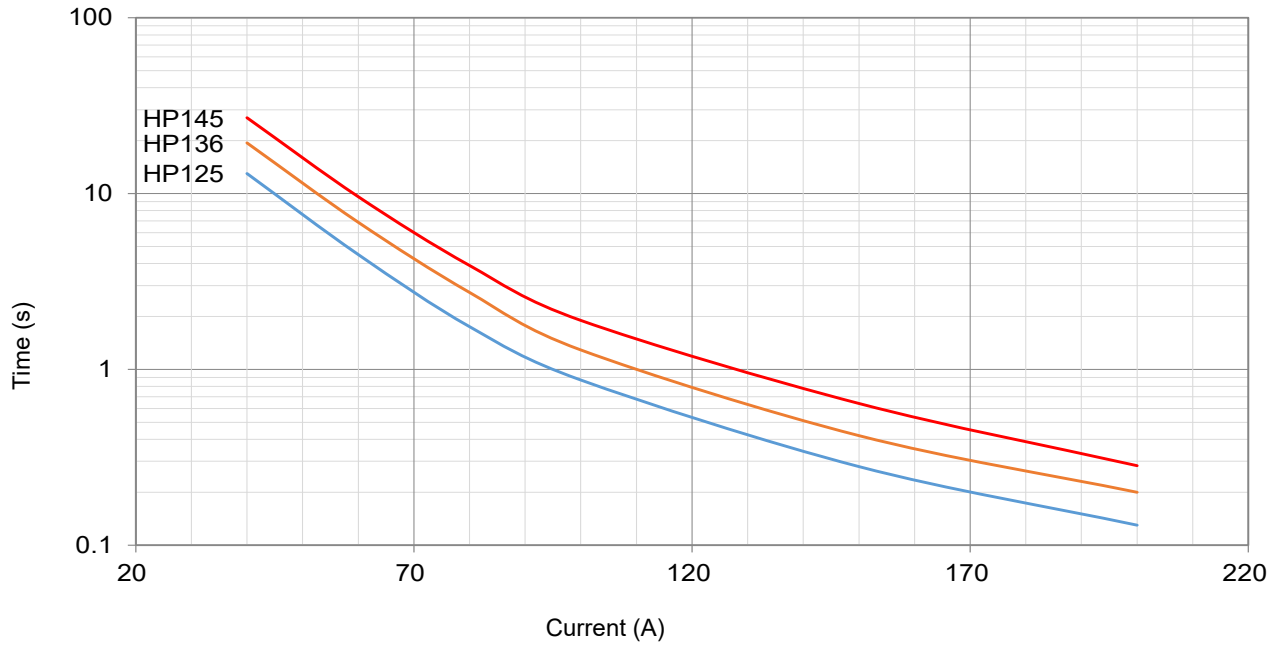

All Rights Reserved by Xiamen SET Electronics Co., Ltd. 2024-2026 V1.1

Packaging Information

Bulk

Item	PE Bag	Box	Carton
Dimensions (mm)	135 × 85	255 × 88 × 98	440 × 300 × 220
Quantity (PCS)	20	300	3000
Gross Weight (kg)			9.0 ± 10%

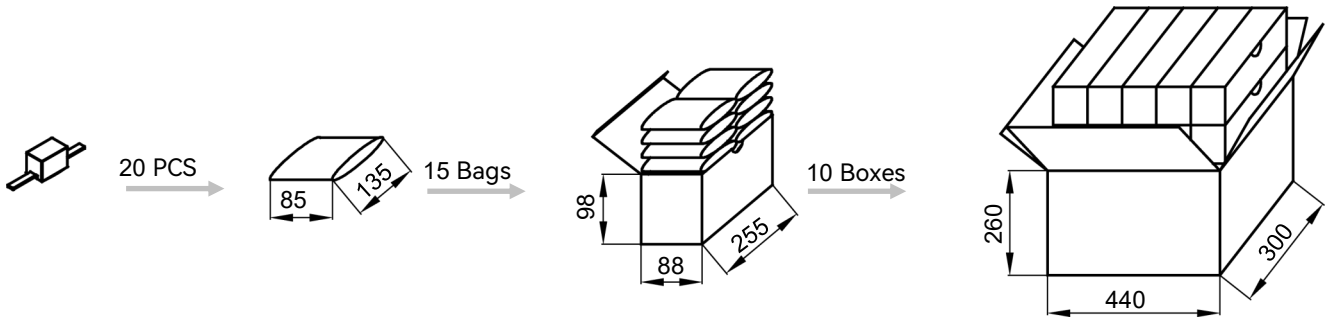

All Rights Reserved by Xiamen SET Electronics Co., Ltd. 2024-2026 V1.1

Part Numbering System

ATCO - HP136 - G N N A B - 001

Other Options

Packing

B	Bulk

Leads Forming

A	Straight Lead
B	Single Lead Bending
C	Leads Bending

Color of Insulation Tube

W	White
R	Red
K	Black
N	None

Insulation Tube Material

T	Teflon
P	Polyester
N	None

Lead Wire Type

G	Flat Electrode Chamber
M	Multi stranded tinned copper wire

Rated Functioning Temp.

136	136 °C, See Specifications

Series

HP	Series See Specifications

Product Category

ATCO	Alloy Thermal-Link

All Rights Reserved by Xiamen SET Electronics Co., Ltd. 2024-2026 V1.1

Thermal-Link (ATCO)-Alloy Type

HN Series

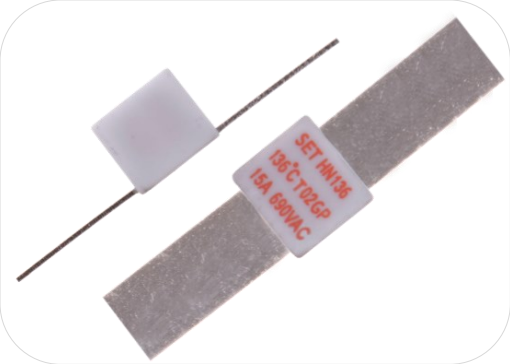

Description

Alloy Thermal-Link / Alloy Thermal Cutoff (ATCO) is defined as a non-resettable protective device functioning one time only. It is widely used in electrical equipment. ATCO is mainly consist of fusible alloy, flux resin, case, sealant and lead wires. Normally, fusible alloy is jointed to the two lead wires. Under abnormal conditions, when the temp. reaches to the fusing temp. of ATCO, the fusible alloy melts and quickly retracts to the two lead wire ends with the aid of the flux resin and disconnects the circuit completely.

SETsafe | SETfuse Alloy Thermal-Link (ATCO) HN series Rated Functioning Temp. from 125 ℃ to 145 ℃, Rated Current: 15 A, safety certification Includes UL, cUL, TUV, PSE, CCC, and complies with RoHS and REACH.

Features

- Non-Resettable
- High Accuracy of Functioning Temp.
- High Operating Voltage
- RoHS & REACH Compliant

Applications

- Surge Protective Devices
- Batteries
- Automobile Electronic

Customization

- Other Temp.
- The Length of Lead Wires
- Leads Forming Types

Structure Diagrams

Axial

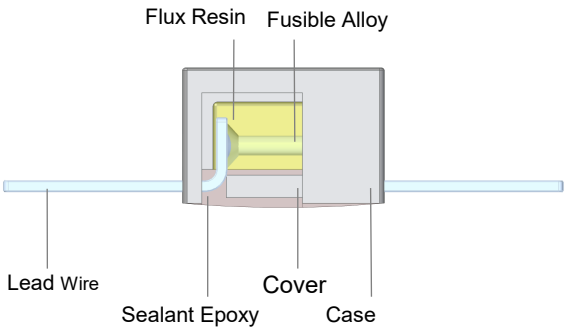

Marking

Axial (Color for reference only)

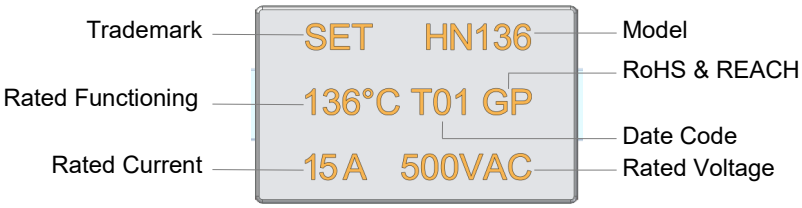

Remark: The first letter of the Date Code Year/quarter A stands for 2000, B stands for 2001, 01 stands for the first quarter, 02 stands for the second quarter, and so on.

Dimensions (mm)

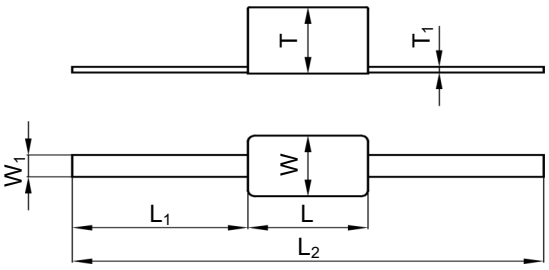

L	L_1	L_2	W	W_1	T	T_1
10.0 ± 1.0	30.0 ± 2.0	70.0 ± 3.0	10.0 ± 1.0	7.6 ± 0.5	7.4 ± 1.0	0.5 ± 0.1

All Rights Reserved by Xiamen SET Electronics Co., Ltd. 2024-2026 V1.1

Specifications

Rated Functioning Temp. (T_f) °C

	Model	Fusing Temp.	T_h	T_m	I_r	U_r	UL	cUL	TUV	PSE	CCC	RoHS REACH
		(°C)	(°C)	(°C)	(A)	(V)						
145	HN145	140 ± 2	115 111[a]	250	15	AC 690	●	●	●	●	●	●
						DC 200	●	●	●	○	●	●
136	HN136	131 ± 3	106 102[a]	250	15	AC 690	●	●	●	●	●	●
						DC 200	●	●	●	○	●	●
125	HN125	121 ± 2	90 86[a]	250	15	AC 690	●	●	●	●	●	●
						DC 200	●	●	●	○	●	●

Note:

1: "●"Means certificated, "○"Means non-certificated, RoHS & REACH Compliant .

2: " * "Customizable DC voltage.

All Rights Reserved by Xiamen SET Electronics Co., Ltd. 2024-2026 V1.1

Agency Information

Institution	Standards	The File No. and certification No. obtained by SETsafe | SETfuse
	UL 60691	E214712
	CAN-CSA-E60691	E214712
	EN 60691	R50336499
	J60691	JET2121-32001-2030、JET2121-32001-2031
	GB 9816.1	2020980205000176

Soldering

Hand-Soldering

1. Soldering should be carried out according to Table HN-1.
2. The thermal element of ATCO is fusible alloy with low melting point, which is jointed with ATCO lead wires. Improper soldering operation (too high soldering temp. , too long soldering time, too short lead wire etc.) may transfer more heat to the thermal element and ATCO may open in advance.
3. When soldering conditions are more severe than those listed in Table HN-1, a heat sink fixture should be used between soldering point and ATCO body.
4. When soldering, please do not pull / push or twist ATCO body or lead wires.
5. After soldering, let it naturally cool for longer than 20 seconds. During cooling, never move the ATCO body or lead wires.

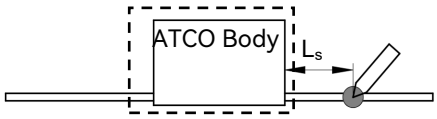

FIGURE HN-1

TABLE HN-1 Hand-Soldering Time

Rated Functioning Temp. (T_f)	Max. Allowable Soldering Time for Different Lead Wire Length (Fig.HN-1)									Max. Soldering Temp.
	L_s Length	Time		L_s Length	Time		L_s Length	Time		
		Tinned Copper Wire	CP Wire		Tinned Copper Wire	CP Wire		Tinned Copper Wire	CP Wire	
(°C)	(mm)	(s)	(s)	(mm)	(s)	(s)	(mm)	(s)	(s)	(°C)
125 to 135	10	1[a]	4	20	3	6	30	5	8	400
136 to 145	10	3	6	20	5	8	30	5	8	400

Note:
a: Auxiliary Heat Sink Fixture is Required to Avoid ATCO Cutting off Unexpectedly.

All Rights Reserved by Xiamen SET Electronics Co., Ltd. 2024-2026 V1.1

Wave Soldering

The wave soldering parameters as Table T-2, for reference only, when ATCO is for practice use, you need to do some validation experiments. For example, using X-RAY to see the fusible alloy of ATCO whether damage after wave soldering.

TABLE T-2 Wave Soldering Parameters Setting

Rated Functioning Temp. (T_f)	Max. Allowable Preheating Temp. When the Length of Lead Wire is Different (Fig.T-1)				Preheating Time (t_1)	Max. Wave Soldering Temp.	Dwelling Time (t_2)	Cooling Time (t_3)
	L_s Length	Preheating Temp.	L_s Length	Preheating Temp.				
(°C)	(mm)	(°C)	(mm)	(°C)	(s)	(°C)	(s)	(s)
125 to 130	Recommend Hand-Soldering							
131 to 145	20	80	30	90	< 60	≤ 260	≤ 3	≤ 10

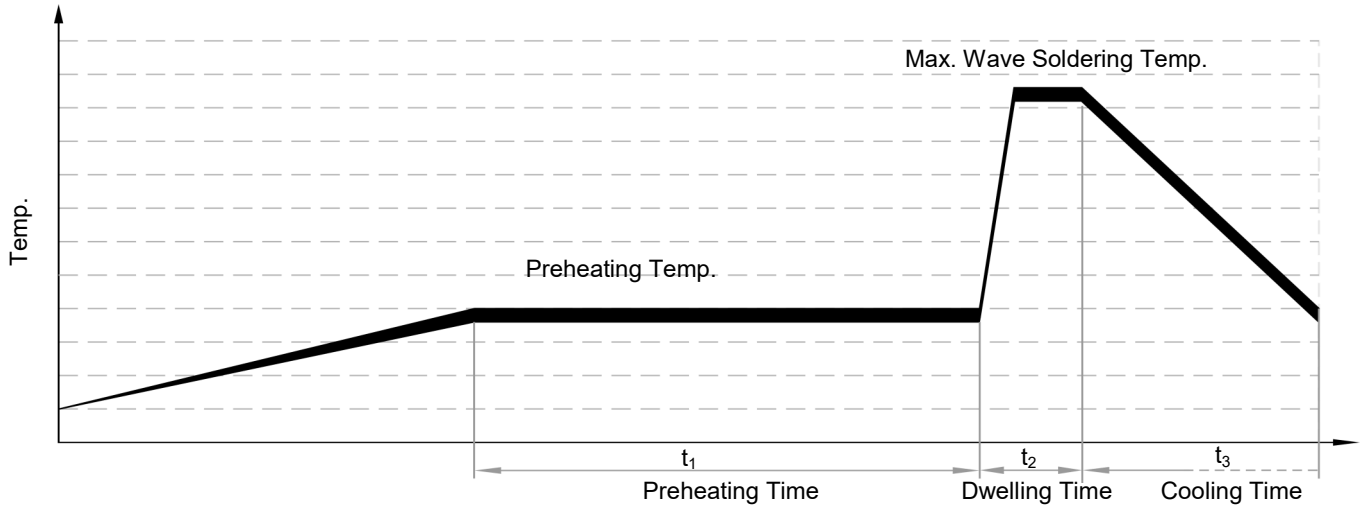

All Rights Reserved by Xiamen SET Electronics Co., Ltd. 2024-2026 V1.1

Product Temp.-Time Curve (Reference)

The Temp.-Time Curve of Thermal-Link in different temp. oil bath.

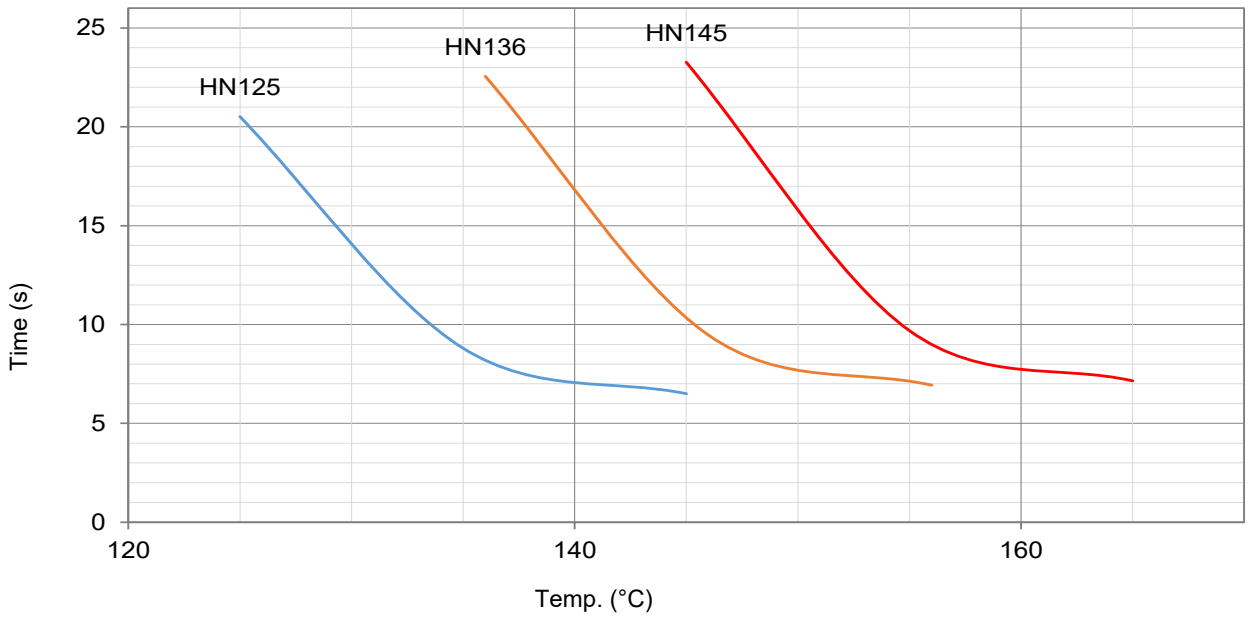

Product Current-Time Curve (Reference)

The Current-Time Curve shows functioning time at multi-times rated current at room temperature 25 ± 2 °C.

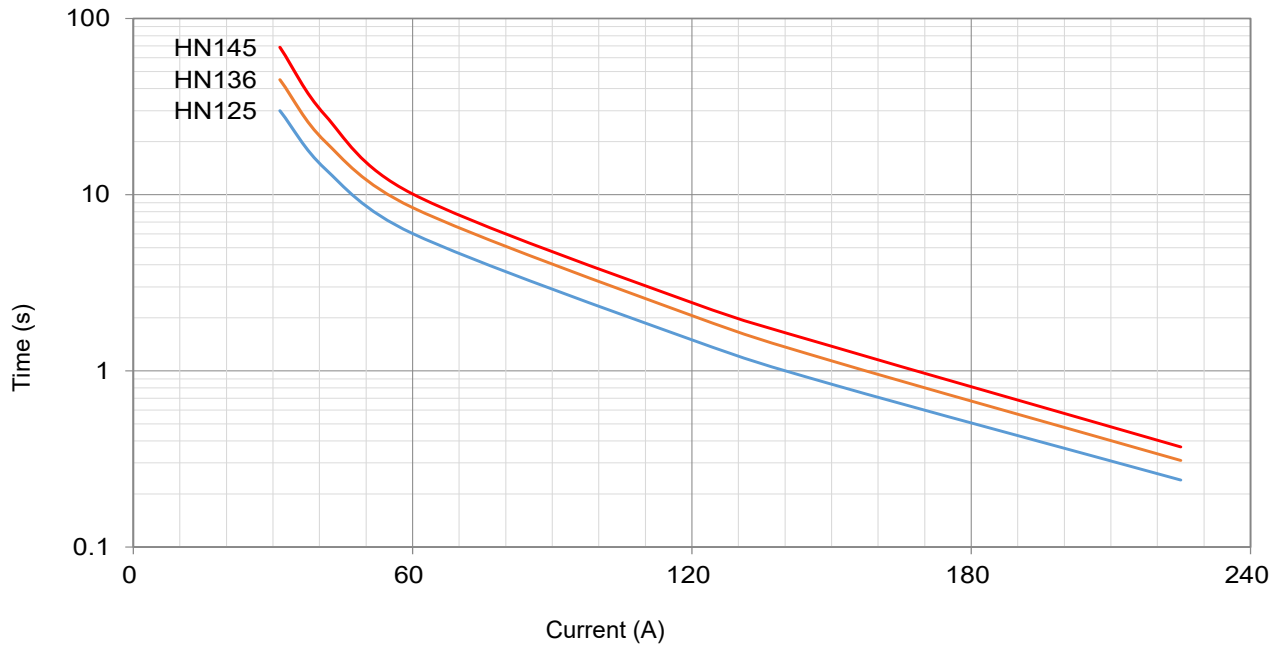

All Rights Reserved by Xiamen SET Electronics Co., Ltd. 2024-2026 V1.1

Packaging Information

Bulk

Item	PE Bag	Box	Carton
Dimensions (mm)	135 × 85	255 × 88 × 98	440 × 300 × 220
Quantity (PCS)	20	300	3000
Gross Weight (kg)			13.0 ± 10%

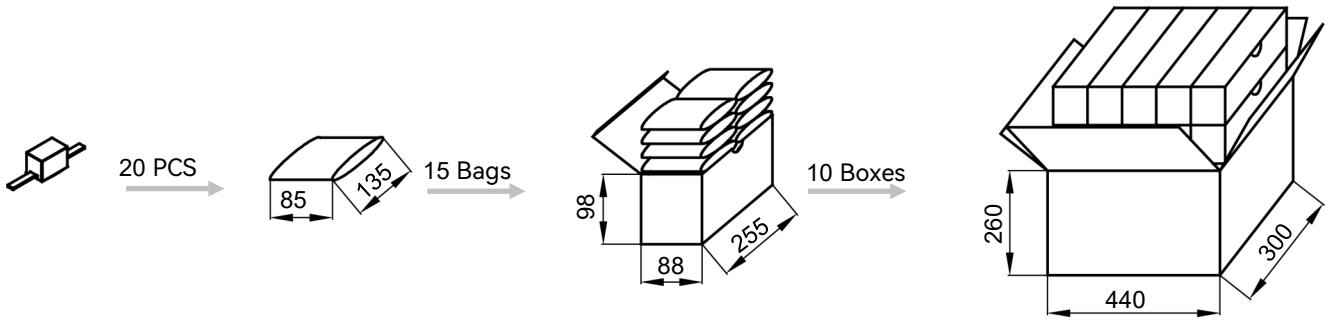

All Rights Reserved by Xiamen SET Electronics Co., Ltd. 2024-2026 V1.1

Part Numbering System

ATCO - HN136 - G N N A B - 001

Other Options

Packing

B	Bulk

Leads Forming

A	Straight Lead
B	Single Lead Bending
C	Leads Bending

Color of Insulation Tube

W	White
R	Red
K	Black
N	None

Insulation Tube Material

T	Teflon
P	Polyester
N	None

Lead Wire Type

G	Flat Electrode Chamber
M	Multi stranded tinned copper wire

Rated Functioning Temp.

136	136 °C, See Specifications

Series

HN	Series See Specifications

Product Category

ATCO	Alloy Thermal-Link

All Rights Reserved by Xiamen SET Electronics Co., Ltd. 2024-2026 V1.1

www.SETsafe.com
www.SETfuse.com

20+

OVER 20 YEARS OF DESIGNING, MANUFACTURING AND SELLING OF CIRCUIT PROTECTION COMPONENTS

40+

SOLD TO MORE THAN 40 COUNTRIES AND REGIONS

Automatic

AUTOMATIC PROCESS PRODUCTION

500

A BRAND CHOSEN BY FORTUNE 500 COMPANIES

SET safe | SET fuse

NO. 8067, 8001 West Xiang'an Road,Torch High-tech industrial District, Xiang'an 361101 Xiamen P.R. China
+ 86 592-5715-838 sales@SETfuse.com

All Rights Reserved by Xiamen SET Electronics Co., Ltd. Ver. 2024 - 2026