MOV
Metal Oxide Varistor

SETsafe | SETfuse

Metal Oxide Varistor-High Surge Type (MOV) Feature & Model List Overview

Nominal Operating Voltage U_n (V) AC	Nominal Operating Voltage U_n (V) DC	Maximum Peak Current (8/20 μs) (kA) 8	13	27.5	50	Maximum Continuous Operating Voltage U_n (V) AC	Maximum Continuous Operating Voltage U_n (V) DC	Page
480V	500V	○	○	SFV25S122K	SFV34S122K	750	990	
		○	○	SFV25S112K	SFV34S112K	680	895	
		○	○	SFV25S102K	SFV34S102K	625	825	
415V		○	○	SFV25S911K	SFV34S911K	550	745	
380V		○	○	SFV25S821K	SFV34S821K	510	670	
		○	○	SFV25S751K	SFV34S751K	460	615	
100V - 240V		SFV14D681K	SFV20D681K	SFV25S681K	SFV34S681K	420	560	
		SFV14D621K	SFV20D621K	SFV25S621K	SFV34S621K	385	505	
		SFV14D561K	SFV20D561K	SFV25S561K	SFV34S561K	350	460	
		SFV14D511K	SFV20D511K	SFV25S511K	SFV34S511K	320	415	
100V - 220V		SFV14D471K	SFV20D471K	SFV25S471K	SFV34S471K	300	385	
		SFV14D431K	SFV20D431K	SFV25S431K	SFV34S431K	275	350	
100V - 120V	250V	SFV14D391K	SFV20D391K	SFV25S391K	SFV34S391K	250	320	
		SFV14D361K	SFV20D361K	SFV25S361K	SFV34S361K	230	300	
		SFV14D331K	SFV20D331K	SFV25S331K	SFV34S331K	210	275	
		SFV14D301K	SFV20D301K	SFV25S301K	SFV34S301K	190	250	
100V	125V	SFV14D271K	SFV20D271K	SFV25S271K	SFV34S271K	175	225	
		SFV14D241K	SFV20D241K	SFV25S241K	SFV34S241K	150	200	
		SFV14D221K	SFV20D221K	○	○	140	180	
		SFV14D201K	SFV20D201K	○	○	130	170	
		○	○	○	○	115	150	
	48V	○	○	○	○	95	125	
		○	○	○	○	75	100	
		○	○	○	○	60	85	
		○	○	○	○	50	65	
	24V	○	○	○	○	40	56	
		○	○	○	○	35	45	
	12V	○	○	○	○	30	38	
		○	○	○	○	25	31	
		○	○	○	○	20	26	
		○	○	○	○	17	22	

Maximum Peak Current (8/20 μs) (kA)

+86-592-571-5838 www.SETfuse.com www.SETsafe.com E-mail : sales@SETfuse.com

All Rights Reserved by Xiamen SET Electronics Co., Ltd. 2021-2023 V3.0

MOV
Metal Oxide Varistor

SETsafe | SETfuse

Agency Information

Agency Information	UL				CUL		TUV			CQC		
Category	VZCA2				VZCA8		/			/		
Series	Nominal Varistor Voltage	UCT	Standards	File NO.	Standards	File NO.	Nominal Varistor Voltage	Standards	File NO.	Nominal Varistor Voltage	Standards	File NO.
14D H Model	201 - 681	85 °C/105 °C 125 °C	UL 1449 4th Edition	E322662	CSA C22.2 No.269.5-17	E322662	201 - 681	EN 61051-1:2008 IEC 61051-1:2007 IEC 61051-2:1991+A1 IEC 61051-2-2:1991 Annex G.8.1 of IEC 62368 -1:2018	J 50234703	201 - 681	GB/T 10193-1997 GB/ T10194-1997 GB 4943.1-2011 GB 8898-2011	CQC12001084354
20D H Model	201 - 821	85 °C/105 °C 125 °C					201 - 681	EN 61051-1:2008 IEC 61051-1:2007 IEC 61051-2:1991 IEC 61051-2-2:1991 Annex G 8.1 of IEC 62368 -1:2018	J 50239739	201 - 681	GB/T 10193-1997 GB/ T10194-1997 GB 4943.1-2011 GB 8898-2011	CQC12001084355
25S H Model	241 - 122	85 °C					241 - 122	EN 61051-1:2008 IEC 61051-1:2007 IEC 61051-2:1991+A1 IEC 61051-2-2:1991 Annex Q of IEC 60950- 1:2005+A1+A2	J 50401611	/	/	/
34S H Model	241 - 122	85 °C					/	/	/	/	/	/

All Rights Reserved by Xiamen SET Electronics Co., Ltd. 2021-2023 V3.0

MOV
Metal Oxide Varistor

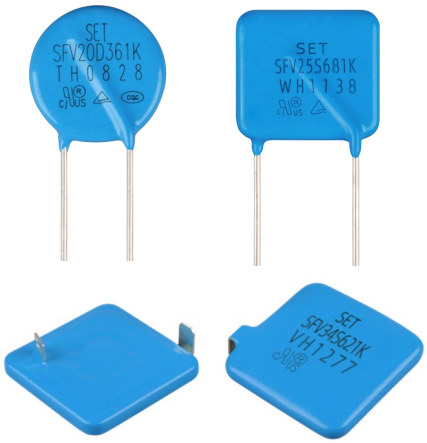

Description

Compared with standard type varistor, the high-surge impact varistor uses materia ls withextra high performance, having impulse capacity about 30% higher than nor mal varistorof the same size. Besides, the varistor has good long-term stability, and can be used in higher surge requirement or miniaturization designmen .

Product Structure

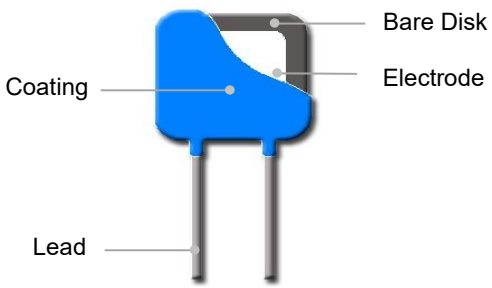

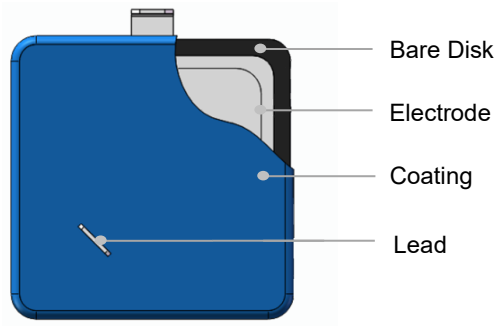

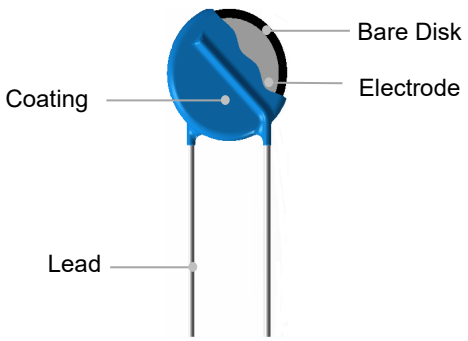

Applications

- Power Supplies
- Home Electrical Appliances
- Industrial Devices
- Surge Protectors
- Telecom Devices

All Rights Reserved by Xiamen SET Electronics Co., Ltd. 2021-2023 V3.0

Marking

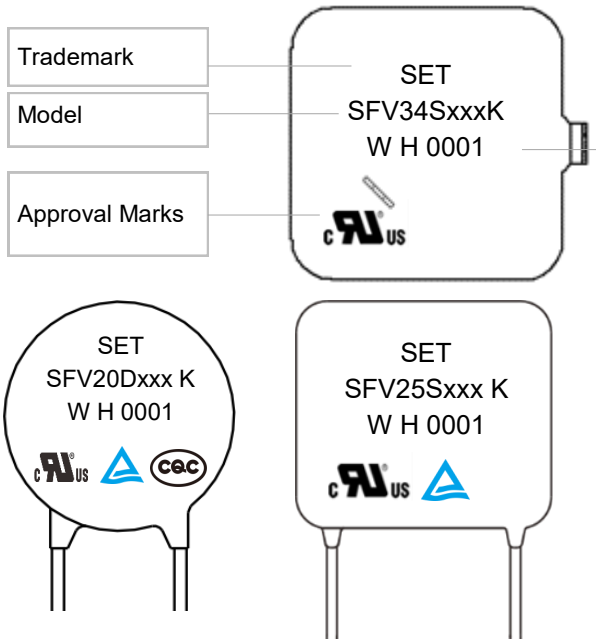

Internal ID	
Year Code	3000—A …… 2022 —W
Surge Level	H: High Energy Type
Serial NO.	(E.G.: 0001)

Lead Types

Lead Types		Codes
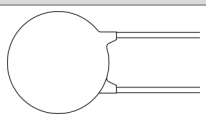	Straight Lead	A
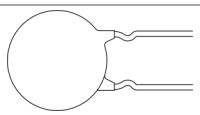	Inward Crimp Lead	B
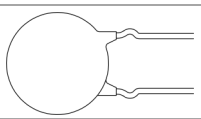	Outward Crimp Lead	C
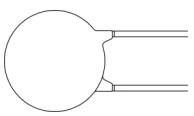	Little Straight Lead	I
	Inline Crimp Lead	D
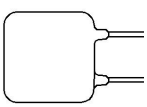	Straight Lead	A

All Rights Reserved by Xiamen SET Electronics Co., Ltd. 2021-2023 V3.0

Temp. Derating Curve

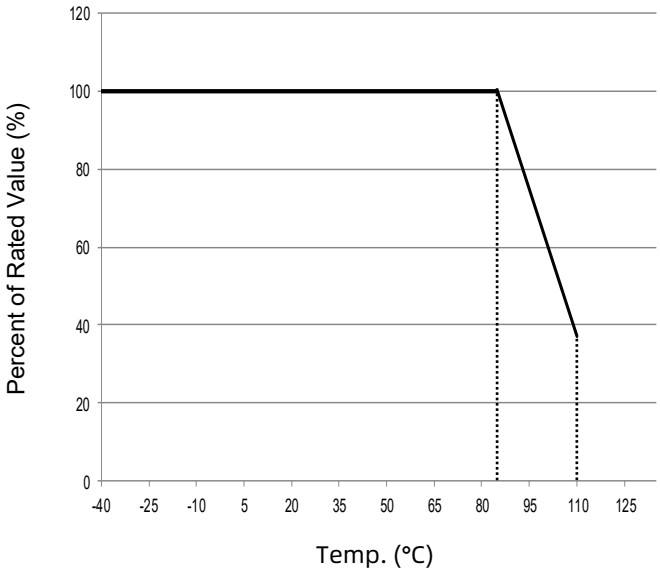

For Standard Temp. Series Products

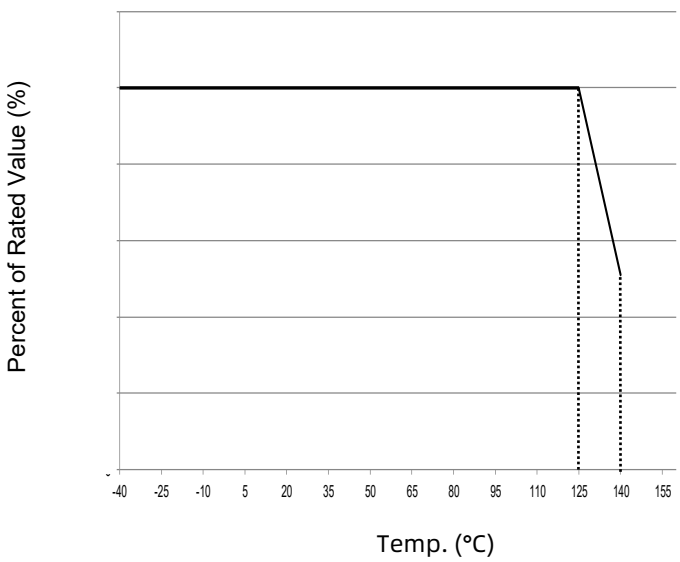

For High Temp. Series Products

Note: When ambient temp. exceeds 85 °C, the peak surge current and energy rating should be reduced as shown in the above figure.

Note: For high temp. series, when ambient temp. exceeds 125 °C, the peak surge current and energy rating should be reduced as shown in the above figure.

General Technical Data

Item	Standard Temp	High Temp.	Unit
Operating Temp.	-40 to +85	-40 to +125	°C
Storage Temp.	-40 to +125	-40 to +150	°C
Voltage Proof	≥2500	≥1000	V_{ac}
Insulation Resistance	≥100	≥100	MΩ

All Rights Reserved by Xiamen SET Electronics Co., Ltd. 2021-2023 V3.0

Part Numbering System

SFV 20 D 621 K N H A - 001

Other Options
001~ZZZ

Lead Types
A: Straight Lead
B: Inward Crimp Lead
C: Outward Crimp Lead
D: Inline Crimp Lead
I : Little Straight Lead

Performance Code
H: High Surge (8/20 μs)

Coating & Operating Temp.
N: Epoxy Coating 85 °C
P: Epoxy Coating 105 °C
M: Epoxy Coating 125 °C
T: Silicone Coating 125 °C
B: Bare

Voltage Tolerance
K : ±10%

Nominal Varistor Voltage
820: 82×10^{0} = 82V
621: 62×10^{1} = 620 V
122: 12×10^{2} = 1200 V

Chip Shape
D: Round
S: Square

Bare Disk Dimension
D 20: 20 mm

Product Category
Setfuse Varistor

*For More Details Refer To Packaging Information.

MOV

All Rights Reserved by Xiamen SET Electronics Co., Ltd. 2021-2023 V3.0

Part Numbering System

SFV 34 S 621 K N H A - 001

Other Options
001~ZZZ

Lead Types

Performance Code
H: High Surge (8/20 μs)

Coating & Operating Temp.
N: Epoxy Coating 85 °C

Voltage Tolerance
K : ±10%

Nominal Varistor Voltage
820: 82×10^{0} = 82V
621: 62×10^{1} = 620 V
122: 12×10^{2} = 1200 V

Chip Shape
S: Square

Bare Disk Dimension
S 34: 34×34 mm

Product Category
Setfuse Varistor

*For More Details Refer To Packaging Information.

MOV

All Rights Reserved by Xiamen SET Electronics Co., Ltd. 2021-2023 V3.0

Glossary

Item	Description
V_N	**Nominal Varistor Voltage** Voltage, at specified D.C. current used as a reference point in the component characteristics.
I_L	**Leakage Current** Measuring at 75% of varistor voltage.
UCT	**Upper Category Temp.** Max. ambient temp. for which a varistor has been designed to operate continuously.
LCT	**Lower Category Temp.** Minimum ambient temp. at which a varistor has been designed to operate continuously.
Max. Peak Current	**Max. Peak Current** Max. current per pulse, which may be passed by a varistor at an ambient temp. of 25 °C, for a given number of pulses.
V_C	**Clamping Voltage** Peak voltage developed across the varistor terminations under standard atmospheric conditions, when passing an 8/20 μs class current pulse.
Voltage Proof	**Voltage Proof** Max. peak voltage, which may be applied under continuous operating conditions between the varistor terminations and any conducting mounting surface (Applicable only to insulated varistors).
C_V	**Capacitance** Capacitance across the MOV measured at a specified frequency and voltage.
V_{ac}	**Max. Continuous a.c. Voltage** Max. a.c. r.m.s. voltage of a substantially sinusoidal waveform (less than 5% total harmonic distortion) which can be applied to the component under continuous operating conditions at 25 °C.
V_{dc}	**Max. Continuous d.c. Voltage** Max. d.c. voltage (with less than 5% ripple) which can be applied to the component under continuous operating conditions at an ambient temp. of 25 °C.

MOV

All Rights Reserved by Xiamen SET Electronics Co., Ltd. 2021-2023 V3.0

Dimensions (mm)

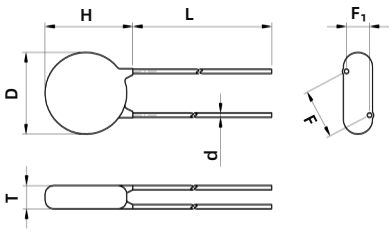

Straight Lead

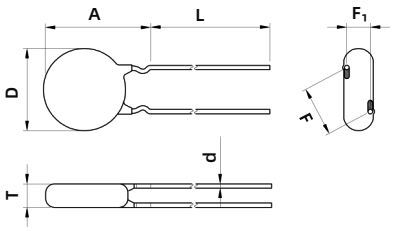

Inward Crimp

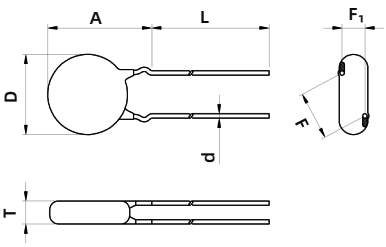

Outward Crimp

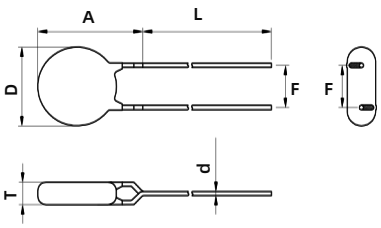

Inline Crimp

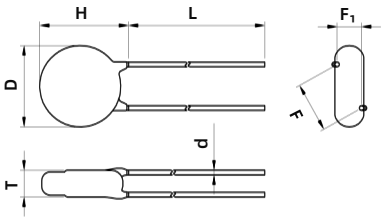

Little Straight Lead

Model	L (Min.)	H (Max.)	T (Max.)	D (Max.)	d	F	F_1	A (Max.)
SFV14D201K	20	18.5	4.6	16.5	0.80±0.05	7.5±0.6	1.3 - 2.9	21.5
SFV14D221K	20	18.5	4.7	16.5	0.80±0.05	7.5±0.6	1.4 - 3.0	21.5
SFV14D241K	20	18.5	4.9	16.5	0.80±0.05	7.5±0.6	1.4 - 3.1	21.5
SFV14D271K	20	18.5	5.0	16.5	0.80±0.05	7.5±0.6	1.5 - 3.3	21.5
SFV14D301K	20	18.5	5.2	16.5	0.80±0.05	7.5±0.6	1.7 - 3.5	21.5
SFV14D331K	20	18.5	5.4	16.5	0.80±0.05	7.5±0.6	1.8 - 3.6	21.5
SFV14D361K	20	18.5	5.6	16.5	0.80±0.05	7.5±0.6	1.9 - 3.8	21.5
SFV14D391K	20	18.5	5.7	16.5	0.80±0.05	7.5±0.6	2.0 - 4.0	21.5
SFV14D431K	20	18.5	6.0	16.5	0.80±0.05	7.5±0.6	2.2 - 4.2	21.5
SFV14D471K	20	18.5	6.2	16.5	0.80±0.05	7.5±0.6	2.4 - 4.4	21.5
SFV14D511K	20	18.5	6.4	16.5	0.80±0.05	7.5±0.6	2.6 - 4.6	21.5
SFV14D561K	20	18.5	6.7	16.5	0.80±0.05	7.5±0.6	2.9 - 4.9	21.5
SFV14D621K	20	18.5	7.1	16.5	0.80±0.05	7.5±0.6	3.2 - 5.2	21.5
SFV14D681K	20	18.5	7.4	16.5	0.80±0.05	7.5±0.6	3.6 - 5.6	21.5

Note:
The above data is for reference only.

All Rights Reserved by Xiamen SET Electronics Co., Ltd. 2021-2023 V3.0

Specification

Model	Surge Level	Max. Continuous Operating Voltage		Varistor Voltage @1 mA DC		Clamping Voltage (Max.)		Max. Peak Current (1 time, 8/20 μs)	Max. Energy (8/20 μs)	Typical Capacitance (For reference only) @1 kHz	Agency Approvals			
		Vac	Vdc	Min.	Max.	V_C	I_P	(kA)	(J)	(pF)	UL	CUL	TUV	CQC
		(V)	(V)	(V)	(V)	(V)	(A)							
SFV14D201K	H	130	170	180	220	340	50	8	150	1000	●	●	●	●
SFV14D221K	H	140	180	198	242	360	50	8	160	900	●	●	●	●
SFV14D241K	H	150	200	216	264	395	50	8	180	830	●	●	●	●
SFV14D271K	H	175	225	243	297	455	50	8	200	740	●	●	●	●
SFV14D301K	H	190	250	270	330	500	50	8	220	670	●	●	●	●
SFV14D331K	H	210	275	297	363	550	50	8	245	610	●	●	●	●
SFV14D361K	H	230	300	324	396	595	50	8	260	560	●	●	●	●
SFV14D391K	H	250	320	351	429	650	50	8	290	510	●	●	●	●
SFV14D431K	H	275	350	387	473	710	50	8	320	460	●	●	●	●
SFV14D471K	H	300	385	423	517	775	50	8	350	430	●	●	●	●
SFV14D511K	H	320	415	459	561	845	50	8	380	390	●	●	●	●
SFV14D561K	H	350	460	504	616	925	50	8	400	360	●	●	●	●
SFV14D621K	H	385	505	558	682	1025	50	8	400	320	●	●	●	●
SFV14D681K	H	420	560	612	748	1120	50	8	400	290	●	●	●	●

Note: ● Approved ○ Unauthorized

All Rights Reserved by Xiamen SET Electronics Co., Ltd. 2021-2023 V3.0

Packaging Information

- Bulk Packaging (Code: BUL)
- Bulk Packaging Quantity & Weight.

Series	Nominal Varistor Voltage	PE Bag	Box	Carton	G. W / Carton (365 × 265 × 245)
14D	(V)	(PCS)	(PCS)	(PCS)	(kg)±10%
	201 ~ 361	500	1000	6000	10 ~ 15
	391 ~ 621	400	800	4800	13 ~ 18
	681	250	500	3000	12

Note:
Other lead length packaging information, please contact SETsafe | SETfuse.

All Dimensions in mm

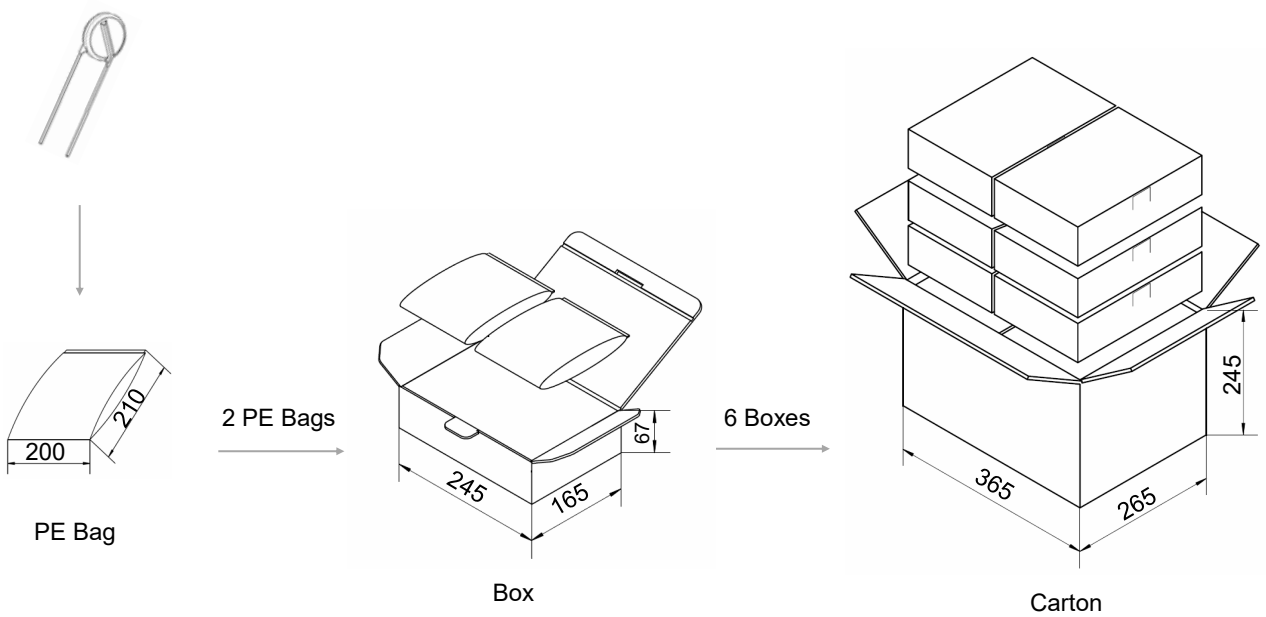

All Rights Reserved by Xiamen SET Electronics Co., Ltd. 2021-2023 V3.0

Dimensions (mm)

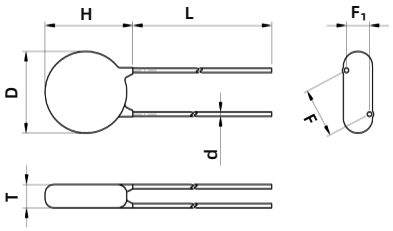

Straight Lead

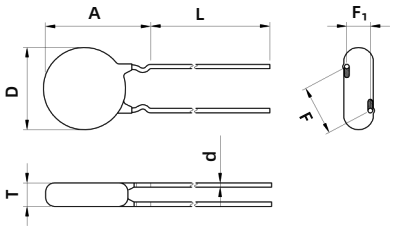

Inward Crimp

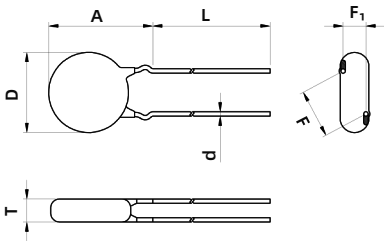

Outward Crimp

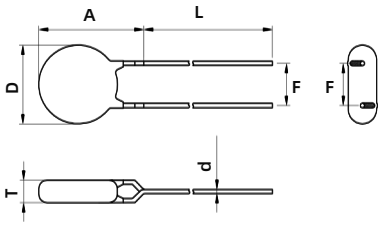

Inline Crimp

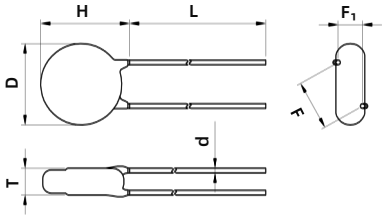

Little Straight Lead

Model	L (Min.)	H (Max.)	T (Max.)	D (Max.)	d	F	F_1	A (Max.)
SFV20D201K	20	25.5	5.1	23	1.00±0.05	10.0±0.6	1.5 - 3.2	27.5
SFV20D221K	20	25.5	5.2	23	1.00±0.05	10.0±0.6	1.6 - 3.3	27.5
SFV20D241K	20	25.5	5.3	23	1.00±0.05	10.0±0.6	1.7 - 3.4	27.5
SFV20D271K	20	25.5	5.5	23	1.00±0.05	10.0±0.6	1.8 - 3.6	27.5
SFV20D301K	20	25.5	5.7	23	1.00±0.05	10.0±0.6	1.9 - 3.8	27.5
SFV20D331K	20	25.5	5.8	23	1.00±0.05	10.0±0.6	2.0 - 3.9	27.5
SFV20D361K	20	25.5	6.0	23	1.00±0.05	10.0±0.6	2.1 - 4.1	27.5
SFV20D391K	20	25.5	6.2	23	1.00±0.05	10.0±0.6	2.3 - 4.3	27.5
SFV20D431K	20	25.5	6.4	23	1.00±0.05	10.0±0.6	2.5 - 4.5	27.5
SFV20D471K	20	25.5	6.7	23	1.00±0.05	10.0±0.6	2.8 - 4.8	27.5
SFV20D511K	20	25.5	6.9	23	1.00±0.05	10.0±0.6	3.0 - 5.0	27.5
SFV20D561K	20	25.5	7.2	23	1.00±0.05	10.0±0.6	3.3 - 5.3	27.5
SFV20D621K	20	25.5	7.6	23	1.00±0.05	10.0±0.6	3.6 - 5.6	27.5
SFV20D681K	20	25.5	8.0	23	1.00±0.05	10.0±0.6	4.0 - 6.0	27.5

Note:
The above data is for reference only.

All Rights Reserved by Xiamen SET Electronics Co., Ltd. 2021-2023 V3.0

Specification

Model	Surge Level	Max. Continuous Operating Voltage		Varistor Voltage @1 mA DC		Clamping Voltage (Max.)		Max. Peak Current (1 time, 8/20 μs)	Max. Energy (8/20 μs)	Typical Capacitance (For reference only) @1 kHz	Agency Approvals			
		Vac	Vdc	Min.	Max.	V_C	I_P	(kA)	(J)	(pF)	UL	CUL	TUV	CQC
		(V)	(V)	(V)	(V)	(V)	(A)							
SFV20D201K	H	130	170	180	220	340	100	13	300	2000	●	●	●	●
SFV20D221K	H	140	180	198	242	360	100	13	320	1800	●	●	●	●
SFV20D241K	H	150	200	216	264	395	100	13	340	1650	●	●	●	●
SFV20D271K	H	175	225	243	297	455	100	13	380	1500	●	●	●	●
SFV20D301K	H	190	250	270	330	500	100	13	400	1300	●	●	●	●
SFV20D331K	H	210	275	297	363	550	100	13	440	1200	●	●	●	●
SFV20D361K	H	230	300	324	396	595	100	13	470	1100	●	●	●	●
SFV20D391K	H	250	320	351	429	650	100	13	510	1000	●	●	●	●
SFV20D431K	H	275	350	387	473	710	100	13	550	930	●	●	●	●
SFV20D471K	H	300	385	423	517	775	100	13	600	850	●	●	●	●
SFV20D511K	H	320	415	459	561	845	100	13	650	780	●	●	●	●
SFV20D561K	H	350	460	504	616	925	100	13	700	710	●	●	●	●
SFV20D621K	H	385	505	558	682	1025	100	13	700	650	●	●	●	●
SFV20D681K	H	420	560	612	748	1120	100	13	800	600	●	●	●	●

Note: ● Approved ○ Unauthorized

All Rights Reserved by Xiamen SET Electronics Co., Ltd. 2021-2023 V3.0

Packaging Information

- Bulk Packaging (Code: BUL)
- Bulk Packaging Quantity & Weight.

Series	Nominal Varistor Voltage	PE Bag	Box	Carton	G. W / Carton (365 × 265 × 245)
	(V)	(PCS)	(PCS)	(PCS)	(kg)±10%
20D	201 ~ 471	250	500	3000	11 ~ 16
	511 ~ 681	200	400	2400	14 ~ 18

Note:
Other lead length packaging information, please contact SETsafe | SETfuse.

All Dimensions in mm

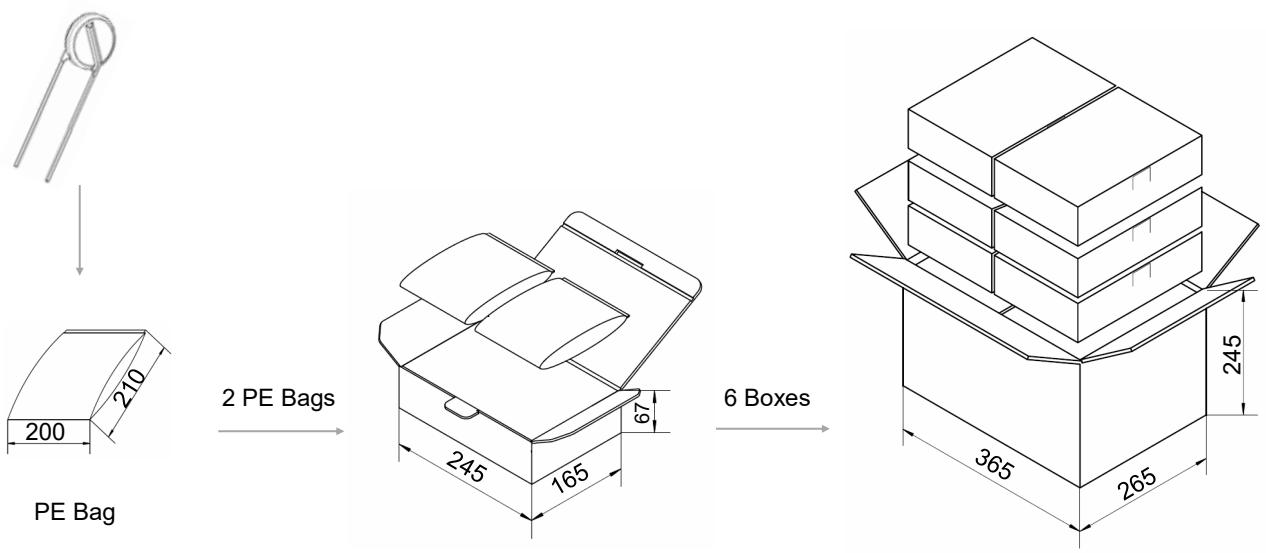

All Rights Reserved by Xiamen SET Electronics Co., Ltd. 2021-2023 V3.0

Dimensions (mm)

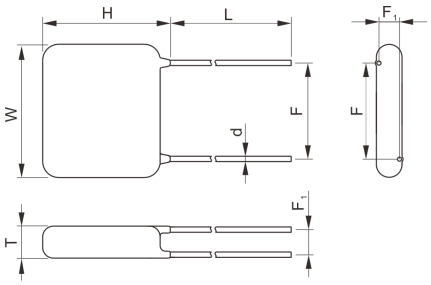

Straight Lead

Model	L	W (Max.)	H (Max.)	T (Max.)	d	F	F_1
SFV25S241K	16.0±3.0	28	30	7.0	1.20±0.05	18.0±1.0	2.6 - 4.6
SFV25S271K	16.0±3.0	28	30	7.2	1.20±0.05	18.0±1.0	2.8 - 4.8
SFV25S301K	16.0±3.0	28	30	7.4	1.20±0.05	18.0±1.0	3.0 - 5.0
SFV25S331K	16.0±3.0	28	30	7.6	1.20±0.05	18.0±1.0	3.1 - 5.1
SFV25S361K	16.0±3.0	28	30	7.8	1.20±0.05	18.0±1.0	3.3 - 5.3
SFV25S391K	16.0±3.0	28	30	8.0	1.20±0.05	18.0±1.0	3.5 - 5.5
SFV25S431K	16.0±3.0	28	30	8.2	1.20±0.05	18.0±1.0	3.7 - 5.7
SFV25S471K	16.0±3.0	28	30	8.5	1.20±0.05	18.0±1.0	4.0 - 6.0
SFV25S511K	16.0±3.0	28	30	8.7	1.20±0.05	18.0±1.0	4.2 - 6.2
SFV25S561K	16.0±3.0	28	30	9.0	1.20±0.05	18.0±1.0	4.5 - 6.5
SFV25S621K	16.0±3.0	28	30	9.4	1.20±0.05	18.0±1.0	4.8 - 6.8
SFV25S681K	16.0±3.0	28	30	9.8	1.20±0.05	18.0±1.0	5.2 - 7.2
SFV25S751K	16.0±3.0	28	30	10.2	1.20±0.05	18.0±1.0	5.6 - 7.6
SFV25S821K	16.0±3.0	28	30	10.7	1.20±0.05	18.0±1.0	6.0 - 8.0
SFV25S911K	16.0±3.0	28	30	11.2	1.20±0.05	18.0±1.0	6.6 - 8.6
SFV25S102K	16.0±3.0	28	30	11.8	1.20±0.05	18.0±1.0	7.1 - 9.1
SFV25S112K	16.0±3.0	28	30	12.4	1.20±0.05	18.0±1.0	7.7 - 9.7
SFV25S122K	16.0±3.0	28	30	13.0	1.20±0.05	18.0±1.0	8.3 - 10.3

Note:
The above data is for reference only.

MOV

All Rights Reserved by Xiamen SET Electronics Co., Ltd. 2021-2023 V3.0

Specification

Model	Max. Continuous Operating Voltage		Varistor Voltage @1 mA DC		Clamping Voltage (Max.)		Max. Discharge Current (8/20 μs)		Max. Energy (10/1000 μs)	Typical Capacitance (For reference only) @1 kHz	Agency Approvals			
	VAC	VDC	Min.	Max.	V_C	I_P	I_n	I_{max}	(J)	(pF)	UL	cUL	TUV	CQC
	(V)	(V)	(V)	(V)	(V)	(A)	(kA)	(kA)						
SFV25S241K	150	200	216	264	395	175	12.5	27.5	302	2800	●	●	●	○
SFV25S271K	175	225	243	297	455	175	12.5	27.5	340	2450	●	●	●	○
SFV25S301K	190	250	270	330	500	175	12.5	27.5	375	2200	●	●	●	○
SFV25S331K	210	275	297	363	550	175	12.5	27.5	410	2050	●	●	●	○
SFV25S361K	230	300	324	396	595	175	12.5	27.5	465	1850	●	●	●	○
SFV25S391K	250	320	351	429	650	175	12.5	27.5	520	1700	●	●	●	○
SFV25S431K	275	350	387	473	710	175	12.5	27.5	575	1600	●	●	●	○
SFV25S471K	300	385	423	517	775	175	12.5	27.5	630	1450	●	●	●	○
SFV25S511K	320	415	459	561	845	175	12.5	27.5	665	1300	●	●	●	○
SFV25S561K	350	460	504	616	925	175	12.5	27.5	720	1200	●	●	●	○
SFV25S621K	385	505	558	682	1025	175	12.5	27.5	790	1100	●	●	●	○
SFV25S681K	420	560	612	748	1120	175	12.5	27.5	790	1000	●	●	●	○
SFV25S751K	460	615	675	825	1240	175	12.5	27.5	825	900	●	●	●	○
SFV25S821K	510	670	738	902	1355	175	12.5	27.5	840	800	●	●	●	○
SFV25S911K	550	745	819	1001	1500	175	12.5	27.5	900	700	●	●	●	○
SFV25S102K	625	825	900	1100	1650	175	12.5	27.5	950	660	●	●	●	○
SFV25S112K	680	895	990	1210	1815	175	12.5	27.5	1040	615	●	●	●	○
SFV25S122K	750	1000	1080	1320	1980	175	12.5	27.5	1170	555	●	●	●	○

Note: ● Approved ○ Unauthorized

MOV

All Rights Reserved by Xiamen SET Electronics Co., Ltd. 2021-2023 V3.0

Packaging Information

- Bulk Packaging (Code: BUL)
- Bulk Packaging Quantity & Weight.

Series	Nominal Varistor Voltage	PE Bag	Box	Carton	G. W / Carton （365 × 265 × 245）
	(V)	(PCS)	(PCS)	(PCS)	(kg)±10%
25S	241 ~ 821	100	200	1200	15 ~ 26
	911 ~ 122	80	160	960	23 ~ 28

Note:
Other lead length packaging information, please contact SETsafe | SETfuse.

All Dimensions in mm

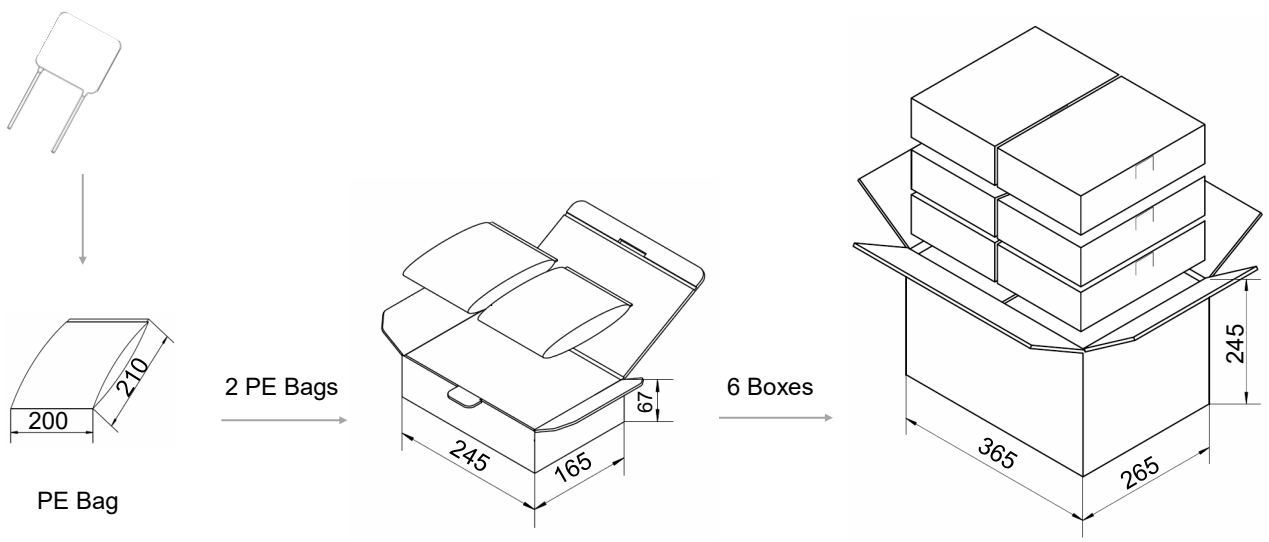

All Rights Reserved by Xiamen SET Electronics Co., Ltd. 2021-2023 V3.0

Dimensions (mm)

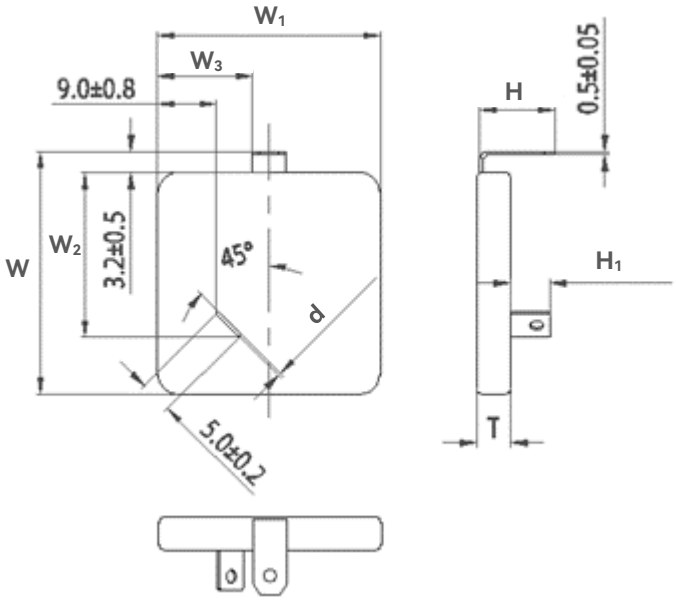

Model	W	W_1	W_2	W_3	H	H_1	T	d
SFV34S241K	37.2±1.0	34.0±1.0	25.2±0.5	14.5±0.5	11.5±0.5	6.0±0.5	4.3	0.5±0.05
SFV34S271K	37.2±1.0	34.0±1.0	25.2±0.5	14.5±0.5	11.5±0.5	6.0±0.5	4.5	0.5±0.05
SFV34S301K	37.2±1.0	34.0±1.0	25.2±0.5	14.5±0.5	11.5±0.5	6.0±0.5	4.7	0.5±0.05
SFV34S331K	37.2±1.0	34.0±1.0	25.2±0.5	14.5±0.5	11.5±0.5	6.0±0.5	4.9	0.5±0.05
SFV34S361K	37.2±1.0	34.0±1.0	25.2±0.5	14.5±0.5	11.5±0.5	6.0±0.5	5.0	0.5±0.05
SFV34S391K	37.2±1.0	34.0±1.0	25.2±0.5	14.5±0.5	11.5±0.5	6.0±0.5	5.1	0.5±0.05
SFV34S431K	37.2±1.0	34.0±1.0	25.2±0.5	14.5±0.5	11.5±0.5	6.0±0.5	5.2	0.5±0.05
SFV34S471K	37.2±1.0	34.0±1.0	25.2±0.5	14.5±0.5	11.5±0.5	6.0±0.5	5.4	0.5±0.05
SFV34S511K	37.2±1.0	34.0±1.0	25.2±0.5	14.5±0.5	11.5±0.5	6.0±0.5	5.6	0.5±0.05
SFV34S561K	37.2±1.0	34.0±1.0	25.2±0.5	14.5±0.5	11.5±0.5	6.0±0.5	5.8	0.5±0.05
SFV34S621K	37.2±1.0	34.0±1.0	25.2±0.5	14.5±0.5	11.5±0.5	6.0±0.5	6.1	0.5±0.05
SFV34S681K	37.2±1.0	34.0±1.0	25.2±0.5	14.5±0.5	11.5±0.5	6.0±0.5	6.5	0.5±0.05
SFV34S751K	37.2±1.0	34.0±1.0	25.2±0.5	14.5±0.5	11.5±0.5	6.0±0.5	6.8	0.5±0.05
SFV34S821K	37.2±1.0	34.0±1.0	25.2±0.5	14.5±0.5	11.5±0.5	6.0±0.5	7.2	0.5±0.05
SFV34S911K	37.2±1.0	34.0±1.0	25.2±0.5	14.5±0.5	11.5±0.5	6.0±0.5	7.6	0.5±0.05
SFV34S102K	37.2±1.0	34.0±1.0	25.2±0.5	14.5±0.5	11.5±0.5	6.0±0.5	8.0	0.5±0.05
SFV34S112K	37.2±1.0	34.0±1.0	25.2±0.5	14.5±0.5	11.5±0.5	6.0±0.5	8.5	0.5±0.05
SFV34S122K	37.2±1.0	34.0±1.0	25.2±0.5	14.5±0.5	11.5±0.5	6.0±0.5	9.0	0.5±0.05

MOV

All Rights Reserved by Xiamen SET Electronics Co., Ltd. 2021-2023 V3.0

Specification

Model	Max. Continuous Operating Voltage		Varistor Voltage @1 mA DC		Clamping Voltage (Max.)		Max. Discharge Current (8/20 μs)		Max. Energy (10/1000 μs)	Typical Capacitance (For reference only) @1 kHz	Agency Approvals			
	VAC	VDC	Min.	Max.	V_C	I_P	I_n	I_{max}	(J)	(pF)	UL	cUL	TUV	CQC
	(V)	(V)	(V)	(V)	(V)	(A)	(kA)	(kA)						
SFV34S241K	150	200	216	264	395	300	20	50	480	5650	●	●	○	○
SFV34S271K	175	225	243	297	455	300	20	50	540	5100	●	●	○	○
SFV34S301K	190	250	270	330	500	300	20	50	600	4510	●	●	○	○
SFV34S331K	210	275	297	363	550	300	20	50	656	4150	●	●	○	○
SFV34S361K	230	300	324	396	595	300	20	50	745	3750	●	●	○	○
SFV34S391K	250	320	351	429	650	300	20	50	830	3500	●	●	○	○
SFV34S431K	275	350	387	473	710	300	20	50	920	2950	●	●	○	○
SFV34S471K	300	385	423	517	775	300	20	50	1000	2880	●	●	○	○
SFV34S511K	320	415	459	561	845	300	20	50	1060	2650	●	●	○	○
SFV34S561K	350	460	504	616	925	300	20	50	1150	2450	●	●	○	○
SFV34S621K	385	505	558	682	1025	300	20	50	1250	2200	●	●	○	○
SFV34S681K	420	560	612	748	1120	300	20	50	1250	2000	●	●	○	○
SFV34S751K	460	615	675	825	1240	300	20	50	1280	1820	●	●	○	○
SFV34S821K	510	670	738	902	1355	300	20	50	1300	1800	●	●	○	○
SFV34S911K	550	745	819	1001	1500	300	20	50	1475	1500	●	●	○	○
SFV34S102K	625	825	900	1100	1650	300	20	50	1550	1350	●	●	○	○
SFV34S112K	680	895	990	1210	1815	300	20	50	1750	1230	●	●	○	○
SFV34S122K	750	1000	1080	1320	1980	300	20	50	2000	1135	●	●	○	○

Note: ● Approved ○ Unauthorized

All Rights Reserved by Xiamen SET Electronics Co., Ltd. 2021-2023 V3.0

Packaging Information

- Bulk Packaging (Code: BUL)
- Bulk Packaging Quantity & Weight.

Series	Nominal Varistor Voltage	PE Bag	Box	Carton	G. W / Carton (365 × 265 × 245)
34S	(V)	(PCS)	(PCS)	(PCS)	(kg)±10%
	241 ~ 301	40	80	480	9 ~ 10
	331 ~ 821	30	60	360	7 ~ 14
	911 ~ 122	20	40	240	10 ~ 13

Note:
Other lead length packaging information, please contact SETsafe | SETfuse.

All Dimensions in mm

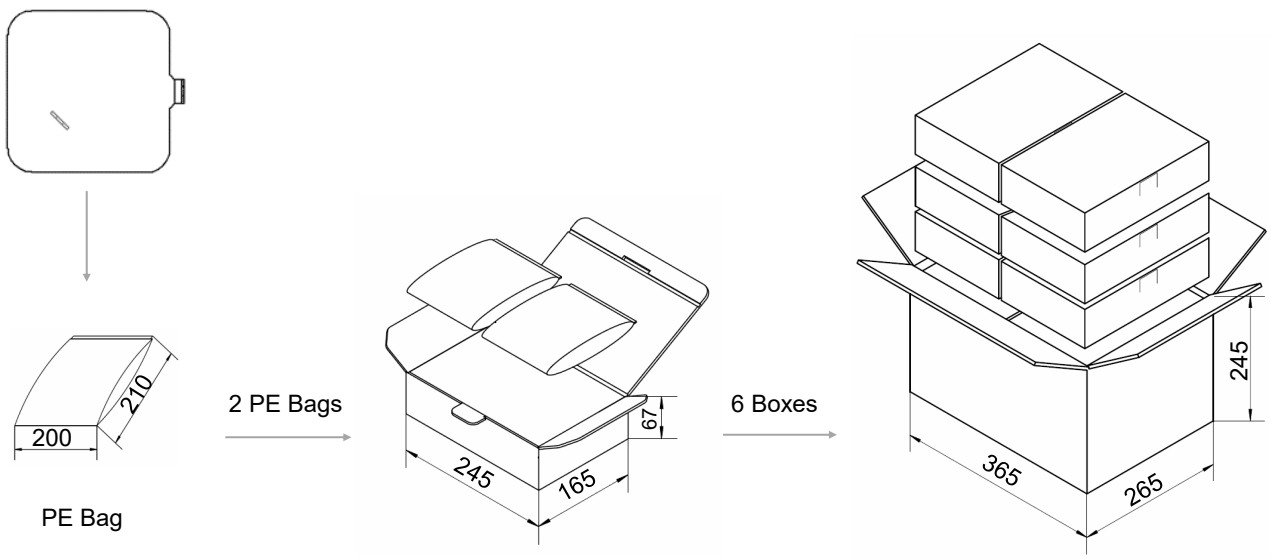

All Rights Reserved by Xiamen SET Electronics Co., Ltd. 2021-2023 V3.0

Soldering Parameters

Wave Soldering Parameters

The wave soldering parameters are for reference only. When MOV is for practice use, some related validation is recommended.

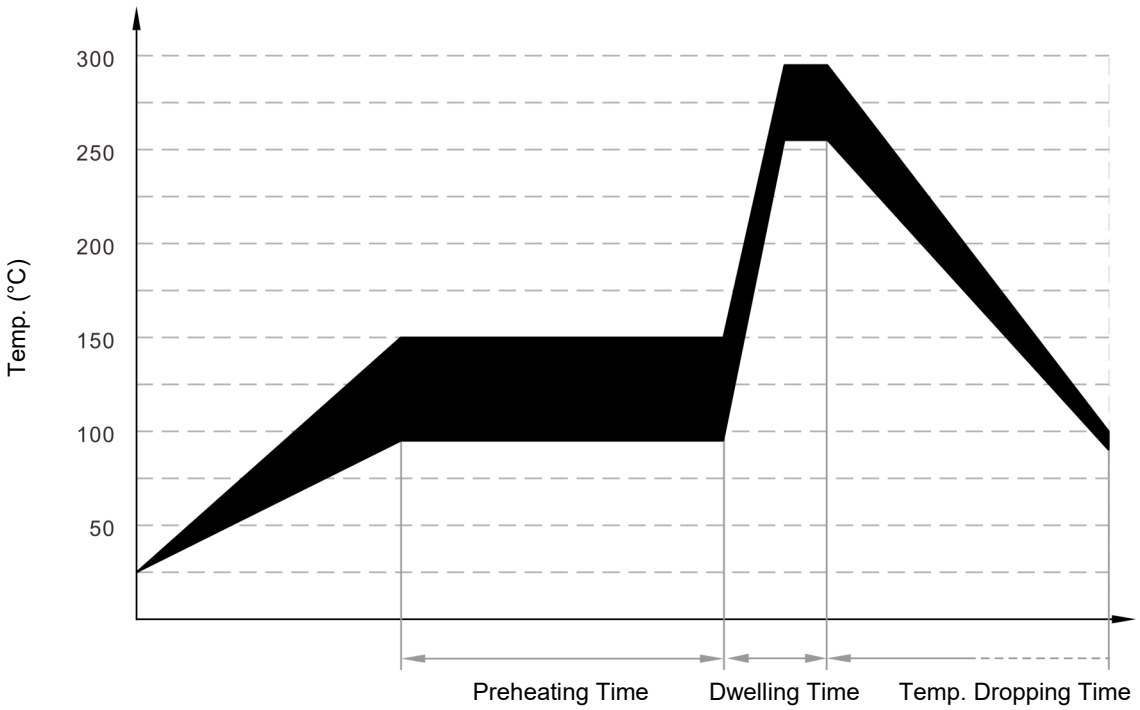

Wave Soldering Curve

Item	Temp. (°C)	Time (s)
Preheating	90 to 150	<150
Dwelling	255 to 290	3 to 10

Recommended Hand-Soldering Parameters

Item	Condition
Temp. of Solder Head	350 °C (max.)
Soldering Time	4 seconds (max.)

All Rights Reserved by Xiamen SET Electronics Co., Ltd. 2021-2023 V3.0

ATTENTION

Usage

1. Varistor must operated in the specified ambient temp.
2. Do not clean the varistor with strong polar solvent such as ketone, esters, benzene and halogenated hydrocarbon.
3. Please do not apply severe vibration, shock or pressure to MOV.
4. Please fix lead wires when bending or cutting. The distance between the bending point and the sealing of MOV shall be greater than 2 mm.

Replacement

If varistor is visually damaged,please replace it.

Storage

1. Storage Temp. Range: (-40 to +125) °C
2. Relative Humidity : ≤75% RH
3. Altitude: <2000 m
4. Do not store the MOV at the high temp., high humidity or corrosive gas environment, to avoid influencing the solder-ability of the lead wires, the product shall be used up within 1 year after receiving the goods.

Environmental Conditions

1. Varistor should neither be exposed to the open air, nor direct sunshine.
2. Varistor should avoid rain, water vapor or other condition of high temp. and high humidity.
3. Varistor should avoid sand dust, salt spray, or other harmful gases.

All Rights Reserved by Xiamen SET Electronics Co., Ltd. 2021-2023 V3.0

Max. Typical Capacitance of Varistor

The typical capacitance of varistor is listed in the specifications. Designers may refer to it when designing MOV in high frequency circuit.

Installation

Mechanical Stress

Do not knock MOV when installing, to avoid mechanical damage.

MOV

All Rights Reserved by Xiamen SET Electronics Co., Ltd. 2021-2023 V3.0