Metal Oxide Varistor & MOV Disk

Standard Type

MOV

- Epoxy Resin Coating
- Low Leakage Current
- Silicone Resin Coating
- Bidirectional and Symmetrical V/I Characteristics
- Operating Temperature Range

Low Temperature: -40 °C / -55 °C

High Temperature: +85 °C / +105 °C / +125 °C

- RoHS & REACH Compliant

Please refer to the datasheet of each series.

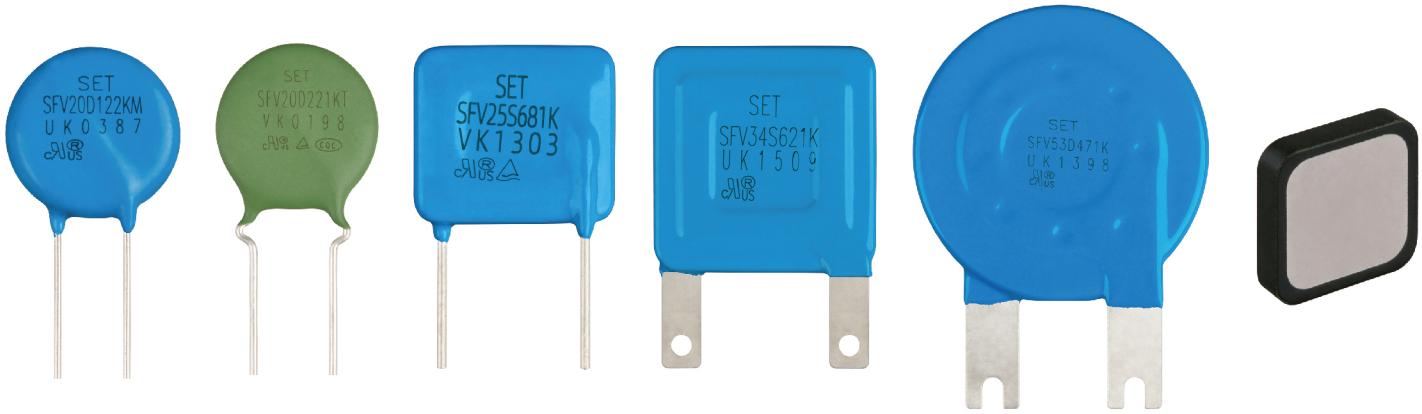

https://setsafe.com/Product/Over-Voltage-Protection/Metal-Oxide-Varistor-and-MOV-Disk/Metal-Oxide-Varistor-and-MOV-Disk-Standard-Type.html

2024

SET safe | SET fuse

赛尔特

Providing a Total Solution for High Standard Safety Circuit Protection

Metal Oxide Varistor（MOV）

Metl Oxide Varistor (MOV) is a nonlinear resistance component with zinc oxide (ZnO) as its main constituent. The resistance of an MOV is sensitive to changes in the lied voltage. Below the threshold voltage, the MOV exhibits high resistance, allowing only a negligibly small leakage current to flow. Once the threshold voltage threshold voltage is exceeded, the resistance of the MOV drops sharply, enablingthe the conduction of a large current. This characteristic makes the MOV suitable for detecting and suppressing surge voltage and overvoltage, thereby protect the circuit from damage caused by excessive voltage.

The Metal Oxide Varistor (MOV) finds wide application in various fields such as photovol taics, communication, lightning protection, power supply, and power strips. It serves to suppress transient overvoltage and absorb surge energy within the circuit.

SETsafe | SETfuse offers Metal Oxide Varistors (MOV) with maximum peak current ratings ranging from 8 kA to 50 kA, and maximum continuous voltage ratings from 130VAC to 750 VAC. Safety certification Includes UL, cUL, TUV, and CQC, and comply with RoHS and REACH requirements.

All Rights Reserved by Xiamen SET Electronics Co., Ltd. 2024-2026 V1.1

Catalogue

1 Overview of Features and Models 1
2 Glossary 4
3 Attention 5
4 Series 6
Description、Features、Applications、Schematics、Product Structure、Dimensions、Part Numbering System、Marking、Specification、Performance Curve、Packaging Information.
4.1 SFV7D Series 11
4.2 SFV10D Series 19
4.3 SFV14D Series 30
4.4 SFV20D Series 43
4.5 SFV25D Series 53
4.6 SFV53D Series 58
4.7 SFV7D M Series 63
4.8 SFV10D M Series 71
4.9 SFV14D M Series 81
4.10 SFV20D M Series 94
4.11 SFV25D M Series 104
4.12 SFV7D T Series 109
4.13 SFV10D T Series 117
4.14 SFV14D T Series 128
4.15 SFV20D T Series 141
4.16 SFV25D T Series 151
4.17 SFV10S Series 156

All Rights Reserved by Xiamen SET Electronics Co., Ltd. 2024-2026 V1.1

Catalogue

4.18 SFV15S Series 161
4.19 SFV20S Series 166
4.20 SFV25S Series 171
4.21 SFV34S Series 178
4.22 YMJ20S Series 183
4.23 YMJ25S Series 184
4.24 YMJ34S Series 185

All Rights Reserved by Xiamen SET Electronics Co., Ltd. 2024-2026 V1.1

SETsafe | SETfuse

Metal Oxide Varistor (MOV) Feature & Model List Overview

Nominal Operating Voltage U_n (V) AC	Nominal Operating Voltage U_n (V) DC	0.5	1	1.75	2	3	3.5	6	10	20	70	Maximum Continuous Operating Voltage U_n (V) AC	Maximum Continuous Operating Voltage U_n (V) DC	Page
480V	500V	○	○	○	○	○	SFV10D122K(T)	SFV14D122K(T)	SFV20D122K(T)	SFV25D122K(T)	SFV53D122K	750	990	
		○	○	○	○	○	SFV10D112K(T)	SFV14D112K(T)	SFV20D112K(T)	SFV25D112K(T)	SFV53D112K	680	895	
		○	○	○	○	○	SFV10D102K(T)	SFV14D102K(T)	SFV20D102K(T)	SFV25D102K(T)	SFV53D102K	625	825	
415V		○	○	○	○	○	SFV10D911K(T)	SFV14D911K(T)	SFV20D911K(T)	SFV25D911K(T)	SFV53D911K	550	745	
380V		○	○	SFV7D821K(T)	○	○	SFV10D821K(T)	SFV14D821K(T)	SFV20D821K(T)	SFV25D821K(T)	SFV53D821K	510	670	
		○	○	SFV7D751K(T)	○	○	SFV10D751K(T)	SFV14D751K(T)	SFV20D751K(T)	SFV25D751K(T)	SFV53D751K	460	615	
100V - 240V		○	○	SFV7D681K(T)	○	○	SFV10D681K(T)	SFV14D681K(T)	SFV20D681K(T)	SFV25D681K(T)	SFV53D681K	420	560	
		○	○	SFV7D621K(T)	○	○	SFV10D621K(T)	SFV14D621K(T)	SFV20D621K(T)	SFV25D621K(T)	SFV53D621K	385	505	
		○	○	SFV7D561K(T)	○	○	SFV10D561K(T)	SFV14D561K(T)	SFV20D561K(T)	SFV25D561K(T)	SFV53D561K	350	460	
		○	○	SFV7D511K(T)	○	○	SFV10D511K(T)	SFV14D511K(T)	SFV20D511K(T)	SFV25D511K(T)	SFV53D511K	320	415	
100V - 220V		○	○	SFV7D471K(T)	○	○	SFV10D471K(T)	SFV14D471K(T)	SFV20D471K(T)	SFV25D471K(T)	SFV53D471K	300	385	
		○	○	SFV7D431K(T)	○	○	SFV10D431K(T)	SFV14D431K(T)	SFV20D431K(T)	SFV25D431K(T)	SFV53D431K	275	350	
100V - 120V	250V	○	○	SFV7D391K(T)	○	○	SFV10D391K(T)	SFV14D391K(T)	SFV20D391K(T)	SFV25D391K(T)	SFV53D391K	250	320	
		○	○	SFV7D361K(T)	○	○	SFV10D361K(T)	SFV14D361K(T)	SFV20D361K(T)	SFV25D361K(T)	SFV53D361K	230	300	
		○	○	SFV7D331K(T)	○	○	SFV10D331K(T)	SFV14D331K(T)	SFV20D331K(T)	SFV25D331K(T)	SFV53D331K	210	275	
		○	○	SFV7D301K(T)	○	○	SFV10D301K(T)	SFV14D301K(T)	SFV20D301K(T)	SFV25D301K(T)	SFV53D301K	190	250	
100V	125V	○	○	SFV7D271K(T)	○	○	SFV10D271K(T)	SFV14D271K(T)	SFV20D271K(T)	SFV25D271K(T)	SFV53D271K	175	225	
		○	○	SFV7D241K(T)	○	○	SFV10D241K(T)	SFV14D241K(T)	SFV20D241K(T)	SFV25D241K(T)	SFV53D241K	150	200	
		○	○	SFV7D221K(T)	○	○	SFV10D221K(T)	SFV14D221K(T)	SFV20D221K(T)	SFV25D221K(T)	SFV53D221K	140	180	
		○	○	SFV7D201K(T)	○	○	SFV10D201K(T)	SFV14D201K(T)	SFV20D201K(T)	SFV25D201K(T)	SFV53D201K	130	170	
		○	○	SFV7D181K(T)	○	○	SFV10D181K(T)	SFV14D181K(T)	SFV20D181K(T)	SFV25D181K(T)	SFV53D181K	115	150	
	48V	○	○	SFV7D151K(T)	○	○	SFV10D151K(T)	SFV14D151K(T)	SFV20D151K(T)	SFV25D151K(T)	SFV53D151K	95	125	
		○	○	SFV7D121K(T)	○	○	SFV10D121K(T)	SFV14D121K(T)	SFV20D121K(T)	SFV25D121K(T)	SFV53D121K	75	100	
		○	○	SFV7D101K(T)	○	○	SFV10D101K(T)	SFV14D101K(T)	SFV20D101K(T)	SFV25D101K(T)	SFV53D101K	60	85	
		○	○	SFV7D820K(T)	○	○	SFV10D820K(T)	SFV14D820K(T)	SFV20D820K(T)	SFV25D820K(T)	SFV53D820K	50	65	
	24V	SFV7D680K(T)	SFV10D680K(T)	○	SFV14D680K(T)	SFV20D680K(T)		SFV25D680K(T)	○	○	○	40	56	
		SFV7D560K(T)	SFV10D560K(T)	○	SFV14D560K(T)	SFV20D560K(T)		SFV25D560K(T)	○	○	○	35	45	
	12V	SFV7D470K(T)	SFV10D470K(T)	○	SFV14D470K(T)	SFV20D470K(T)		SFV25D470K(T)	○	○	○	30	38	
		SFV7D390K(T)	SFV10D390K(T)	○	SFV14D390K(T)	SFV20D390K(T)		SFV25D390K(T)	○	○	○	25	31	
		SFV7D330K(T)	SFV10D330K(T)	○	SFV14D330K(T)	SFV20D330K(T)		SFV25D330K(T)	○	○	○	20	26	
		SFV7D270K(T)	SFV10D270K(T)	○	SFV14D270K(T)	SFV20D270K(T)		SFV25D270K(T)	○	○	○	17	22	
		SFV7D220K(T)	SFV10D220K(T)	○	SFV14D220K(T)	SFV20D220K(T)		SFV25D220K(T)	○	○	○	14	18	

Maximum Peak Current (8/20 μs) (kA)

All Rights Reserved by Xiamen SET Electronics Co., Ltd. 2024-2026 V1.1

SETsafe | SETfuse

Metal Oxide Varistor (MOV) Feature & Model List Overview

Nominal Operating Voltage U_n (V) AC	Nominal Operating Voltage U_n (V) DC	1.75	3.5	6	10	20	Maximum Continuous Operating Voltage U_n (V) AC	Maximum Continuous Operating Voltage U_n (V) DC	Page
480V	500V	○	SFV10D122KM	SFV14D122KM	SFV20D122KM	SFV25D122KM	750	990	
		○	SFV10D112KM	SFV14D112KM	SFV20D112KM	SFV25D112KM	680	895	
		○	SFV10D102KM	SFV14D102KM	SFV20D102KM	SFV25D102KM	625	825	
415V		○	SFV10D911KM	SFV14D911KM	SFV20D911KM	SFV25D911KM	550	745	
380V		SFV7D821KM	SFV10D821KM	SFV14D821KM	SFV20D821KM	SFV25D821KM	510	670	
		SFV7D751KM	SFV10D751KM	SFV14D751KM	SFV20D751KM	SFV25D751KM	460	615	
100V - 240V		SFV7D681KM	SFV10D681KM	SFV14D681KM	SFV20D681KM	SFV25D681KM	420	560	
		SFV7D621KM	SFV10D621KM	SFV14D621KM	SFV20D621KM	SFV25D621KM	385	505	
		SFV7D561KM	SFV10D561KM	SFV14D561KM	SFV20D561KM	SFV25D561KM	350	460	
		SFV7D511KM	SFV10D511KM	SFV14D511KM	SFV20D511KM	SFV25D511KM	320	415	
100V - 220V		SFV7D471KM	SFV10D471KM	SFV14D471KM	SFV20D471KM	SFV25D471KM	300	385	
		SFV7D431KM	SFV10D431KM	SFV14D431KM	SFV20D431KM	SFV25D431KM	275	350	
100V - 120V	250V	SFV7D391KM	SFV10D391KM	SFV14D391KM	SFV20D391KM	SFV25D391KM	250	320	
		SFV7D361KM	SFV10D361KM	SFV14D361KM	SFV20D361KM	SFV25D361KM	230	300	
		SFV7D331KM	SFV10D331KM	SFV14D331KM	SFV20D331KM	SFV25D331KM	210	275	
		SFV7D301KM	SFV10D301KM	SFV14D301KM	SFV20D301KM	SFV25D301KM	190	250	
100V	125V	SFV7D271KM	SFV10D271KM	SFV14D271KM	SFV20D271KM	SFV25D271KM	175	225	
		SFV7D241KM	SFV10D241KM	SFV14D241KM	SFV20D241KM	SFV25D241KM	150	200	
		SFV7D221KM	SFV10D221KM	SFV14D221KM	SFV20D221KM	SFV25D221KM	140	180	
		SFV7D201KM	SFV10D201KM	SFV14D201KM	SFV20D201KM	SFV25D201KM	130	170	
		SFV7D181KM	SFV10D181KM	SFV14D181KM	SFV20D181KM	SFV25D181KM	115	150	
	48V	SFV7D151KM	SFV10D151KM	SFV14D151KM	SFV20D151KM	SFV25D151KM	95	125	
		SFV7D121KM	SFV10D121KM	SFV14D121KM	SFV20D121KM	SFV25D121KM	75	100	
		SFV7D101KM	SFV10D101KM	SFV14D101KM	SFV20D101KM	SFV25D101KM	60	85	
		SFV7D820KM	SFV10D820KM	SFV14D820KM	SFV20D820KM	SFV25D820KM	50	65	
	24V	○	○	SFV25D680KM	○	○	40	56	
		○	○	SFV25D560KM	○	○	35	45	
	12V	○	○	SFV25D470KM	○	○	30	38	
		○	○	○	○	○	25	31	
		○	○	○	○	○	20	26	
		○	○	○	○	○	17	22	
		○	○	○	○	○	14	18	

Maximum Peak Current (8/20 μs) (kA)

Model

All Rights Reserved by Xiamen SET Electronics Co., Ltd. 2024-2026 V1.1

Metal Oxide Varistor (MOV) Feature & Model List Overview

Nominal Operating Voltage U_n (V) AC	Nominal Operating Voltage U_n (V) DC	2	3	5	6	8	10	15	20	25	40	Maximum Continuous Operating Voltage U_n (V) AC	Maximum Continuous Operating Voltage U_n (V) DC	Page
480V	500V	○	○	○	○	○	○	SFV20S122K	○	SFV25S122K	SFV34S122K	750	990	
		○	○	○	○	○	○	SFV20S112K	○	SFV25S112K	SFV34S112K	680	895	
		○	○	○	○	○	○	SFV20S102K	○	SFV25S102K	SFV34S102K	625	825	
415V		○	○	○	○	○	○	SFV20S911K	○	SFV25S911K	SFV34S911K	550	745	
380V		○	○	SFV10S821K	○	○	SFV15S821K	SFV20S821K	○	SFV25S821K	SFV34S821K	510	670	
		○	○	SFV10S751K	○	○	SFV15S751K	SFV20S751K	○	SFV25S751K	SFV34S751K	460	615	
100V - 240V		○	○	SFV10S681K	○	○	SFV15S681K	SFV20S681K	○	SFV25S681K	SFV34S681K	420	560	
		○	○	SFV10S621K	○	○	SFV15S621K	SFV20S621K	○	SFV25S621K	SFV34S621K	385	505	
		○	○	SFV10S561K	○	○	SFV15S561K	SFV20S561K	○	SFV25S561K	SFV34S561K	350	460	
		○	○	SFV10S511K	○	○	SFV15S511K	SFV20S511K	○	SFV25S511K	SFV34S511K	320	415	
100V - 220V		○	○	SFV10S471K	○	○	SFV15S471K	SFV20S471K	○	SFV25S471K	SFV34S471K	300	385	
		○	○	SFV10S431K	○	○	SFV15S431K	SFV20S431K	○	SFV25S431K	SFV34S431K	275	350	
100V - 120V	250V	○	○	SFV10S391K	○	○	SFV15S391K	SFV20S391K	○	SFV25S391K	SFV34S391K	250	320	
		○	○	SFV10S361K	○	○	SFV15S361K	SFV20S361K	○	SFV25S361K	SFV34S361K	230	300	
		○	○	SFV10S331K	○	○	SFV15S331K	SFV20S331K	○	SFV25S331K	SFV34S331K	210	275	
	125V	○	○	SFV10S301K	○	○	SFV15S301K	SFV20S301K	○	SFV25S301K	SFV34S301K	190	250	
		○	○	SFV10S271K	○	○	SFV15S271K	SFV20S271K	○	SFV25S271K	SFV34S271K	175	225	
		○	○	SFV10S241K	○	○	SFV15S241K	SFV20S241K	○	SFV25S241K	SFV34S241K	150	200	
100V		○	○	SFV10S221K	○	○	SFV15S221K	SFV20S221K	○	SFV25S221K	SFV34S221K	140	180	
		○	○	SFV10S201K	○	○	SFV15S201K	SFV20S201K	○	SFV25S201K	SFV34S201K	130	170	
		○	○	SFV10S181K	○	○	SFV15S181K	SFV20S181K	○	SFV25S181K	SFV34S181K	115	150	
	48V	○	○	SFV10S151K	○	○	SFV15S151K	SFV20S151K	○	SFV25S151K	SFV34S151K	95	125	
		○	SFV10S121K	○	○	○	SFV15S121K	SFV20S121K	○	SFV25S121K	SFV34S121K	75	100	
		○	SFV10S101K	○	○	○	SFV15S101K	SFV20S101K	○	SFV25S101K	SFV34S101K	60	85	
		○	SFV10S820K	○	○	○	SFV15S820K	SFV20S820K	○	SFV25S820K	SFV34S820K	50	65	
	24V	SFV10S680K	SFV15S680K	SFV20S680K	○	○	SFV25S680K	○	SFV34S680K	○	○	40	56	
		SFV10S560K	SFV15S560K	SFV20S560K	○	○	SFV25S560K	○	SFV34S560K	○	○	35	45	
		SFV10S470K	SFV15S470K	SFV20S470K	○	SFV25S470K	○	○	SFV34S470K	○	○	30	38	
	12V	SFV10S390K	SFV15S390K SFV20S390K	○	○	SFV25S390K	○	○	○	○	○	25	31	
		SFV10S330K	SFV15S330K SFV20S330K	○	○	SFV25S330K	○	○	○	○	○	20	26	
		SFV10S270K	SFV15S270K SFV20S270K	○	SFV25S270K	○	○	○	○	○	○	17	22	
		SFV10S220K	SFV15S220K SFV20S220K SFV25S220K	○	○	○	○	○	○	○	○	14	18	

Maximum Peak Current (8/20 μs) (kA)

Model

SETsafe | SETfuse

All Rights Reserved by Xiamen SET Electronics Co., Ltd. 2024-2026 V1.1

Glossary

Item	Description
V_N	**Nominal Varistor Voltage** Voltage, at specified D.C. current used as a reference point in the component characteristics. — (GB 18802.331) — (IEC 61051-1)
I_L	**Leakage Current** Measuring at 75% of varistor voltage. — (GB/T 10193) — (IEC 61051-1)
UCT	**Upper Category Temp.** Max. ambient temp. for which a varistor has been designed to operate continuously. — (GB/T 10193) — (IEC 61051-1)
LCT	**Lower Category Temp.** Minimum ambient temp. at which a varistor has been designed to operate continuously. — (GB/T 10193) — (IEC 61051-1)
Max. Peak Current	**Max. Peak Current** Max. current per pulse, which may be passed by a varistor at an ambient temp. of 25 °C, for a given number of pulses. — (GB/T 10193) — (IEC 61051-1)
V_C	**Clamping Voltage** Peak voltage developed across the varistor terminations under standard atmospheric conditions, when passing an 8/20 μs class current pulse. — (GB 18802.331) — (IEC 61051-1)
Voltage Proof	**Voltage Proof** Max. peak voltage, which may be applied under continuous operating conditions between the varistor terminations and any conducting mounting surface (Applicable only to insulated varistors). — (GB/T 10193) — (IEC 61051-1)
C_V	**Capacitance** Capacitance across the MOV measured at a specified frequency and voltage. — (GB 18802.331) — (IEC 61051-1)
V_{ac}	**Max. Continuous a.c. Voltage** Max. a.c. r.m.s. voltage of a substantially sinusoidal waveform (less than 5% total harmonic distortion) which can be applied to the component under continuous operating conditions at 25 °C. — (GB/T 10193) — (IEC 61051-1)
V_{dc}	**Max. Continuous d.c. Voltage** Max. d.c. voltage (with less than 5% ripple) which can be applied to the component under continuous operating conditions at an ambient temp. of 25 °C. — (GB/T 10193) — (IEC 61051-1)
I_{max}	**Max. Discharge Current** Crest value of a current through the SPD having an 8/20 μs waveshape and magnitude according to the manufacturers specification. I_{max} is equal to or greater than I_n. — (GB 18802.1) — (IEC 61643-11)

All Rights Reserved by Xiamen SET Electronics Co., Ltd. 2024-2026 V1.1

ATTENTION

Usage

1. Varistor must operated in the specified ambient temp.
2. Do not clean the varistor with strong polar solvent such as ketone, esters, benzene and halogenated hydrocarbon.
3. Please do not apply severe vibration, shock or pressure to MOV.
4. Please fix lead wires when bending or cutting. The distance between the bending point and the sealing of MOV shall be greater than 2 mm.

Replacement

If varistor is visually damaged,please replace it.

Storage

1. Storage Temp. Range: (-40 to +125) °C.
2. Relative Humidity : ≤75% RH.
3. Altitude: <2000 m.
4. Do not store the MOV at the high temp., high humidity or corrosive gas environment, to avoid influencing the solder-ability of the lead wires, the product shall be used up within 1 year after receiving the goods.

Environmental Conditions

1. Varistor should neither be exposed to the open air, nor direct sunshine.
2. Varistor should avoid rain, water vapor or other condition of high temp. and high humidity.
3. Varistor should avoid sand dust, salt spray, or other harmful gases.

Max. Typical Capacitance of Varistor

The typical capacitance of varistor is listed in the specifications. Designers may refer to it when designing MOV in high frequency circuit.

All Rights Reserved by Xiamen SET Electronics Co., Ltd. 2024-2026 V1.1

MOV
Metal Oxide Varistor

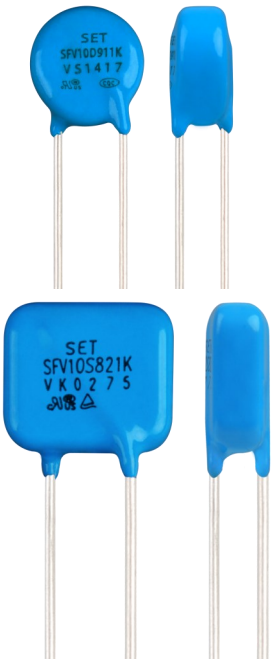

Description

Metl Oxide Varistor (MOV) is a nonlinear resistance component with zinc oxide (ZnO) as its main constituent. The resistance of an MOV is sensitive to changes in the lied voltage. Below the threshold voltage, the MOV exhibits high resistance, allowing only a negligibly small leakage current to flow. Once the threshold voltage is exceeded, the resistance of the MOV drops sharply, enabling the conduction of a large current. This characteristic makes the MOV suitable for detecting and suppressing surge voltage and overvoltage, thereby protect the circuit from damage caused by excessive voltage.

The Metal Oxide Varistor (MOV) finds wide application in various fields such as photovolt aics, communication, lightning protection, power supply, and power strips. It serves to suppress transient overvoltage and absorb surge energy within the circuit.

SETsafe | SETfuse offers Metal Oxide Varistors (MOV) with maximum peak current ratings ranging from 0.75 kA to 70 kA, and maximum continuous voltage ratings from 14VAC to 750 VAC. Safety certification Includes UL, cUL, TUV, and CQC, and comply with RoHS and REACH requirements.

Applications

- Power Supplies
- Home Electrical Appliances
- Industrial Devices
- Surge Protectors
- Telecom Devices

Features

- Epoxy Resin Coating
- Silicone Resin Coating
- Low Leakage Current
- Bidirectional and Symmetrical V/I Characteristics
- Operating Temperature Range

  Low Temperature:-40 °C / -55 °C

  High Temperature:+85 °C / +105 °C / +125 °C
- RoHS & REACH Compliant

Product Structure

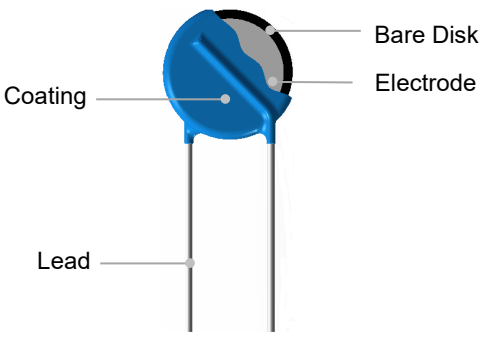

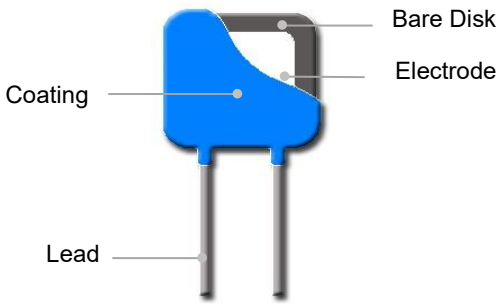

All Rights Reserved by Xiamen SET Electronics Co., Ltd. 2024-2026 V1.1

MOV
Metal Oxide Varistor

Structure

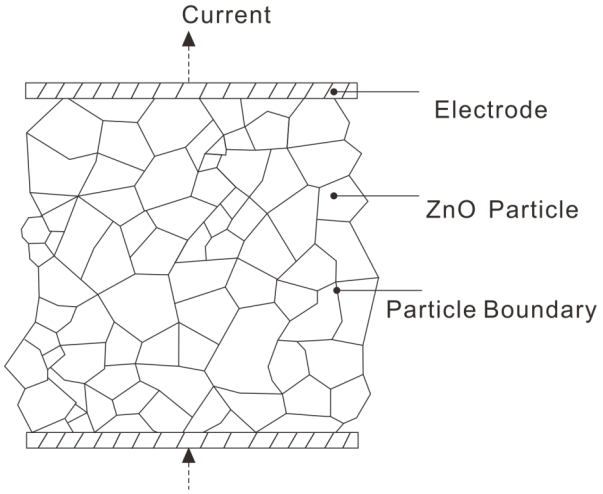

Symbol

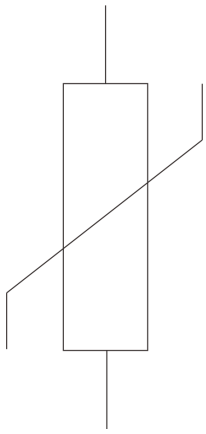

V / I Characteristic Curve

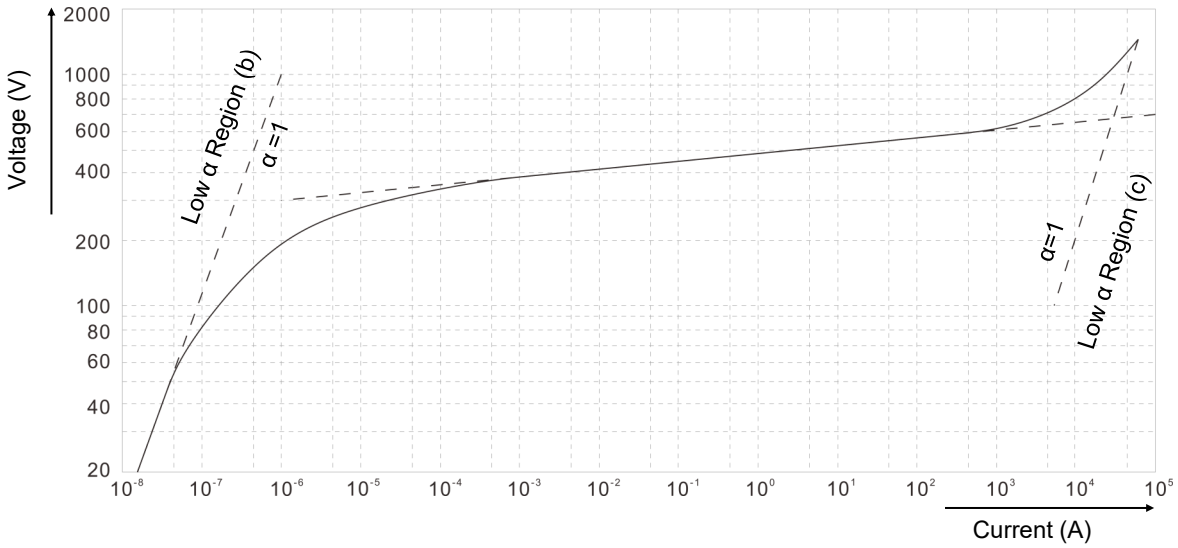

Lead Types

Lead Types		Codes	Lead Types		Codes
Straight Lead	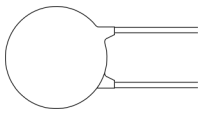	A	Inline Crimp Lead	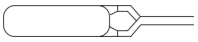	D
Outward Crimp Lead	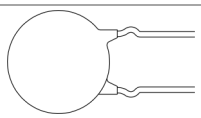	C	Straight Strap Lead	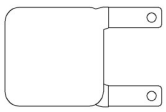	E
Little Straight Lead	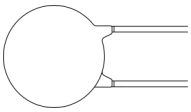	I			

All Rights Reserved by Xiamen SET Electronics Co., Ltd. 2024-2026 V1.1

Marking

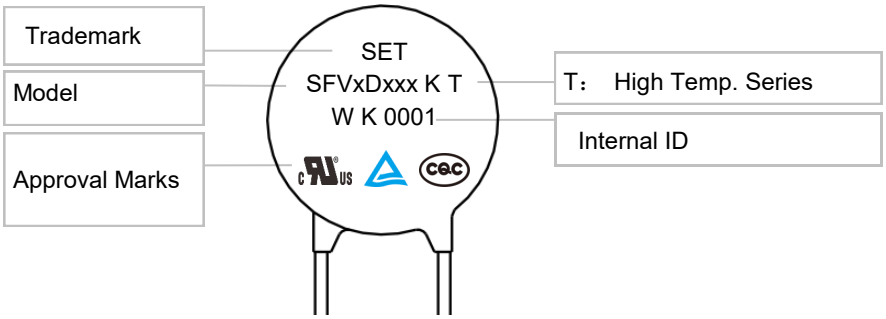

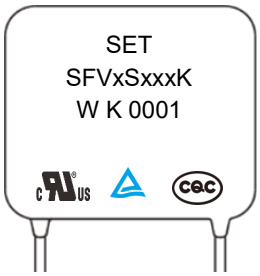

Temp. Derating Curve

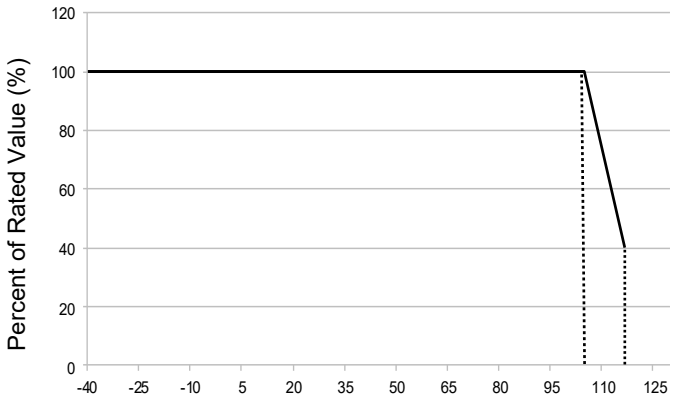

For Normal Temp. Series

Note:
When ambient Temp. exceeds 105 °C, the peak surge current and energy rating should be reduced as shown in left curve.

General Technical Data

Item	Value	Unit
Operating Temperature	-40 to +105	°C
Storage Temperature	-40 to +125	°C
Voltage Proof	≥2500	V_{ac}
Insulation Resistance	≥100	MΩ

All Rights Reserved by Xiamen SET Electronics Co., Ltd. 2024-2026 V1.1

Part Numbering System

SFV 10 D 471 - K P K A BUL - 001

Other Options

***Packaging & Lead Length**
BUL: Bulk + Standard Lead Length (Normal L28)
C35: Bulk + Cut to 3.5 mm
(Range:2.5 mm to 6 mm)
L30: Bulk + Special Lead Length 30 mm
(28 mm to 32 mm)
(0/1)AB: Taping + Box (Hole Pitch 12.7 mm)
(0/1)EB: Taping + Box (Hole Pitch 15.0 mm)
(0/1)AR: Taping + Reel (Hole Pitch 12.7 mm)
(0/1)ER: Taping + Reel (Hole Pitch 15.0 mm)
Note:0/1 Means Product Position
0: In Middle of Two Holes; 1: Across the Hole

Lead Types
A: Straight Lead
C: Outward Crimp Lead
D: Inline Crimp Lead
I: Little Straight Lead

Surge Level
S: Normal Type
K: Standard Type
Q: Advanced Type

Operating Temp.
P: Epoxy Coating 105 °C

Voltage Tolerance
K: ±10%
J: ±5%
S: Special Tolerance

Nominal Varistor Voltage
220: 22×10^{0} = 22 V
471: 47×10^{1} = 470 V
122: 12×10^{2} = 1200 V

Disk Shape
D: Round

Bare Disk Dimension
10: 10 mm

Product Category
SETfuse Varistor

Reminder:
Part numbering system in the datasheet is only for selecting correct parameter and product features. Before placing order, please contact us for specifications and use the part number and product code in the specifications to place order to ensure the part is correct. Product code is the unique indentification.

All Rights Reserved by Xiamen SET Electronics Co., Ltd. 2024-2026 V1.1

Installation

Mechanical Stress

Do not knock MOV when installing, to avoid mechanical damage.

Soldering Parameters

Wave Soldering Parameters

The wave soldering parameters are for reference only. When MOV is for practice use, some related validation is recommended.

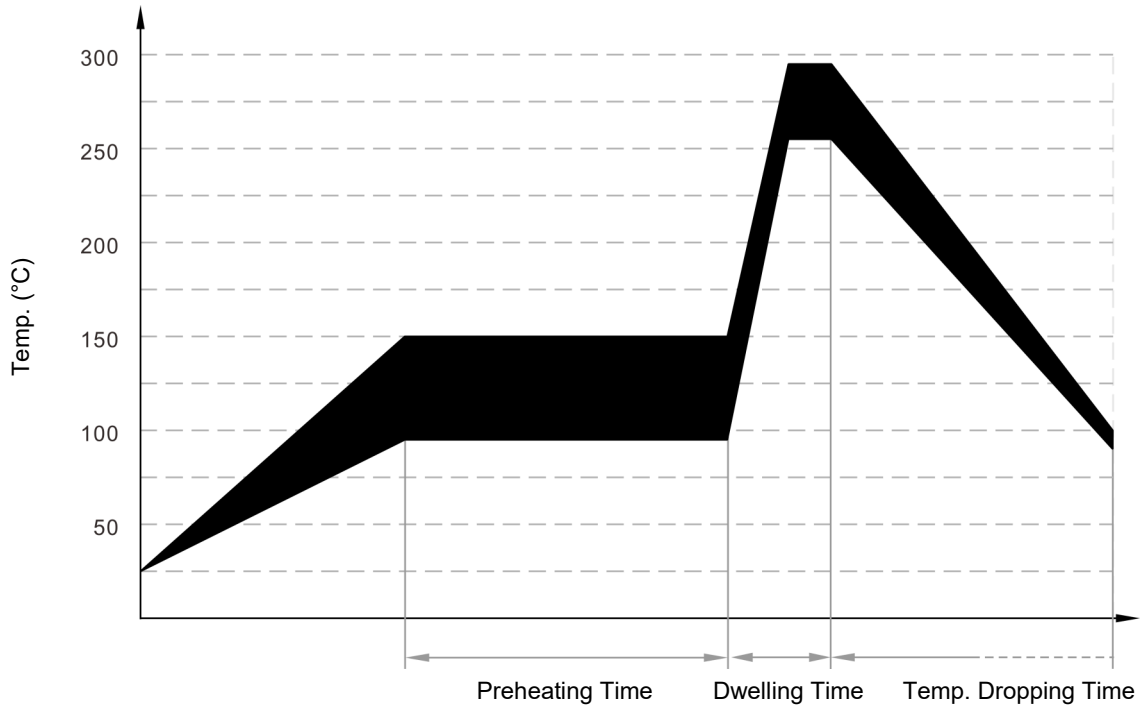

Wave Soldering Curve

Item	Temp. (°C)	Time (s)
Preheating	90 to 150	<150
Dwelling	255 to 290	3 to 10

Recommended Hand-Soldering Parameters

Item	Condition
Temp. of Solder Head	350 °C (max.)
Soldering Time	4 seconds (max.)

All Rights Reserved by Xiamen SET Electronics Co., Ltd. 2024-2026 V1.1

Dimensions (mm)

Model	L (Min.)	H (Max.)	T (Max.)	D (Max.)	d	F	F_1	A (Max.)
SFV7D220K	20	12	4.1	9.0	0.60±0.05	5.0±0.6	1.0 ~ 2.3	12.5
SFV7D270K	20	12	4.4	9.0	0.60±0.05	5.0±0.6	1.1 ~ 2.5	12.5
SFV7D330K	20	12	4.7	9.0	0.60±0.05	5.0±0.6	1.2 ~ 2.7	12.5
SFV7D390K	20	12	5.0	9.0	0.60±0.05	5.0±0.6	1.3 ~ 2.9	12.5
SFV7D470K	20	12	4.2	9.0	0.60±0.05	5.0±0.6	1.1 ~ 2.5	12.5
SFV7D560K	20	12	4.4	9.0	0.60±0.05	5.0±0.6	1.2 ~ 2.7	12.5
SFV7D680K	20	12	4.7	9.0	0.60±0.05	5.0±0.6	1.4 ~ 3.0	12.5
SFV7D820K	20	12	4.0	9.0	0.60±0.05	5.0±0.6	1.1 ~ 2.4	12.5
SFV7D101K	20	12	4.2	9.0	0.60±0.05	5.0±0.6	1.2 ~ 2.6	12.5
SFV7D121K	20	12	4.4	9.0	0.60±0.05	5.0±0.6	1.3 ~ 2.8	12.5
SFV7D151K	20	12	4.7	9.0	0.60±0.05	5.0±0.6	1.4 ~ 3.1	12.5
SFV7D181K	20	12	4.0	9.0	0.60±0.05	5.0±0.6	1.0 ~ 2.4	12.5
SFV7D201K	20	12	4.2	9.0	0.60±0.05	5.0±0.6	1.1 ~ 2.5	12.5
SFV7D221K	20	12	4.3	9.0	0.60±0.05	5.0±0.6	1.2 ~ 2.6	12.5
SFV7D241K	20	12	4.4	9.0	0.60±0.05	5.0±0.6	1.3 ~ 2.7	12.5
SFV7D271K	20	12	4.5	9.0	0.60±0.05	5.0±0.6	1.4 ~ 2.9	12.5
SFV7D301K	20	12	4.7	9.0	0.60±0.05	5.0±0.6	1.5 ~ 3.0	12.5
SFV7D331K	20	12	4.9	9.0	0.60±0.05	5.0±0.6	1.6 ~ 3.1	12.5
SFV7D361K	20	12	5.0	9.0	0.60±0.05	5.0±0.6	1.7 ~ 3.3	12.5
SFV7D391K	20	12	5.2	9.0	0.60±0.05	5.0±0.6	1.8 ~ 3.4	12.5
SFV7D431K	20	12	5.4	9.0	0.60±0.05	5.0±0.6	2.0 ~ 3.6	12.5
SFV7D471K	20	12	5.7	9.0	0.60±0.05	5.0±0.6	2.0 ~ 3.8	12.5
SFV7D511K	20	12	5.9	9.0	0.60±0.05	5.0±0.6	2.0 ~ 4.0	12.5
SFV7D561K	20	12	6.2	9.0	0.60±0.05	5.0±0.6	2.2 ~ 4.2	12.5
SFV7D621K	20	12	6.5	9.0	0.60±0.05	5.0±0.6	2.5 ~ 4.5	12.5
SFV7D681K	20	12	6.8	9.0	0.60±0.05	5.0±0.6	2.8 ~ 4.8	12.5
SFV7D751K	20	12	7.2	9.0	0.60±0.05	5.0±0.6	3.1 ~ 5.1	12.5
SFV7D821K	20	12	7.6	9.0	0.60±0.05	5.0±0.6	3.4 ~ 5.4	12.5

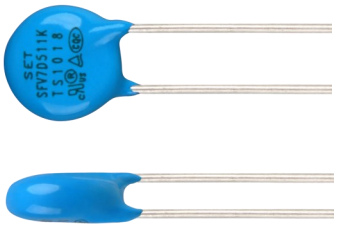

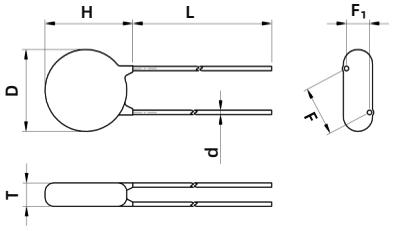

Straight Lead (A)

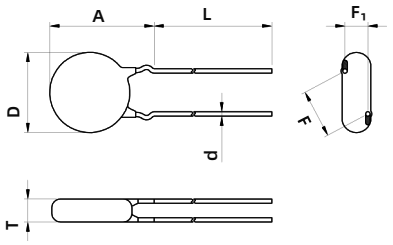

Outward Crimp (C)

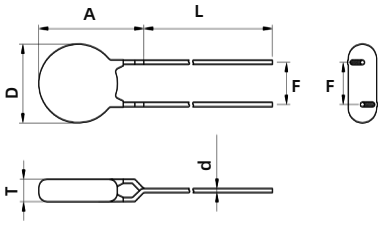

Inline Crimp (D)

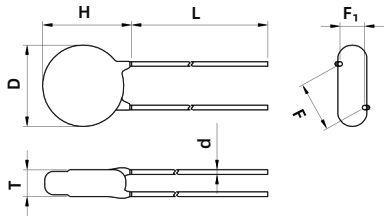

Little Straight Lead (I)

Note:
The above data is for reference only.

All Rights Reserved by Xiamen SET Electronics Co., Ltd. 2024-2026 V1.1

Specification

Model	Surge Level	Max. Continuous Operating Voltage		Varistor Voltage @1 mA DC		Clamping Voltage (Max.)		Max. Peak Current (1 time, 8/20 μs)	Max. Energy (10/1000 μs)	Typical Capacitance (For reference only) @1 kHz	Agency Information			
		VAC	VDC	Min.	Max.	V_C	I_P	S		(pF)	UL	cUL	TUV	CQC
		(V)	(V)	(V)	(V)	(V)	(A)	(kA)	(J)					
SFV7D220K	S	14	18	20	24	43	2.5	0.25	1.1	2300	●	●	●	●
SFV7D270K	S	17	22	24	31	53	2.5	0.25	1.4	1800	●	●	●	●
SFV7D330K	S	20	26	30	36	65	2.5	0.25	1.7	1500	●	●	●	●
SFV7D390K	S	25	31	35	43	77	2.5	0.25	2.1	1300	●	●	●	●
SFV7D470K	S	30	38	42	52	93	2.5	0.25	2.5	1100	●	●	●	●
SFV7D560K	S	35	45	50	62	110	2.5	0.25	3.1	890	●	●	●	●
SFV7D680K	S	40	56	61	75	135	2.5	0.25	3.6	740	●	●	●	●
SFV7D820K	S	50	65	74	90	135	10	1.25	5.5	600	●	●	●	●
SFV7D101K	S	60	85	90	110	165	10	1.25	6.5	500	●	●	●	●
SFV7D121K	S	75	100	108	132	200	10	1.25	7.8	420	●	●	●	●
SFV7D151K	S	95	125	135	165	250	10	1.25	9.7	330	●	●	●	●
SFV7D181K	S	115	150	162	198	300	10	1.25	11.7	280	●	●	●	●
SFV7D201K	S	130	170	180	220	340	10	1.25	13	250	●	●	●	●
SFV7D221K	S	140	180	198	242	360	10	1.25	14	230	●	●	●	●
SFV7D241K	S	150	200	216	264	395	10	1.25	15	210	●	●	●	●
SFV7D271K	S	175	225	243	297	455	10	1.25	18	185	●	●	●	●
SFV7D301K	S	190	250	270	330	500	10	1.25	20	165	●	●	●	●
SFV7D331K	S	210	275	297	363	550	10	1.25	23	150	●	●	●	●
SFV7D361K	S	230	300	324	396	595	10	1.25	25	140	●	●	●	●
SFV7D391K	S	250	320	351	429	650	10	1.25	25	130	●	●	●	●
SFV7D431K	S	275	350	387	473	710	10	1.25	28	115	●	●	●	●
SFV7D471K	S	300	385	423	517	775	10	1.25	30	105	●	●	●	●
SFV7D511K	S	320	415	459	561	845	10	1.25	30	100	●	●	●	●
SFV7D561K	S	350	460	504	616	925	10	1.25	30	90	●	●	●	●
SFV7D621K	S	385	505	558	682	1025	10	1.25	33	80	●	●	●	●
SFV7D681K	S	420	560	612	748	1120	10	1.25	33	75	●	●	●	●
SFV7D751K	S	460	615	675	825	1240	10	1.25	38	70	●	●	●	●
SFV7D821K	S	510	670	738	902	1355	10	1.25	42	65	●	●	●	●

●: Approved ○: Unauthorized ● RoHS & REACH Compliant

All Rights Reserved by Xiamen SET Electronics Co., Ltd. 2024-2026 V1.1

Specification

Model	Surge Level	Max. Continuous Operating Voltage		Varistor Voltage @1 mA DC		Clamping Voltage (Max.)		Max. Peak Current (1 time, 8/20 μs)	Max. Energy (10/1000 μs)	Typical Capacitance (For reference only) @1 kHz	Agency Information			
		VAC	VDC	Min.	Max.	V_C	I_P	K		(pF)	UL	cUL	TUV	CQC
		(V)	(V)	(V)	(V)	(V)	(A)	(kA)	(J)					
SFV7D220K	K	14	18	20	24	43	2.5	0.5	1.3	2300	●	●	●	●
SFV7D270K	K	17	22	24	31	53	2.5	0.5	1.6	1800	●	●	●	●
SFV7D330K	K	20	26	30	36	65	2.5	0.5	2.0	1500	●	●	●	●
SFV7D390K	K	25	31	35	43	77	2.5	0.5	2.4	1300	●	●	●	●
SFV7D470K	K	30	38	42	52	93	2.5	0.5	2.8	1100	●	●	●	●
SFV7D560K	K	35	45	50	62	110	2.5	0.5	3.4	890	●	●	●	●
SFV7D680K	K	40	56	61	75	135	2.5	0.5	4.1	740	●	●	●	●
SFV7D820K	K	50	65	74	90	135	10	1.75	7.0	600	●	●	●	●
SFV7D101K	K	60	85	90	110	165	10	1.75	8.5	500	●	●	●	●
SFV7D121K	K	75	100	108	132	200	10	1.75	10	420	●	●	●	●
SFV7D151K	K	95	125	135	165	250	10	1.75	13	330	●	●	●	●
SFV7D181K	K	115	150	162	198	300	10	1.75	15	280	●	●	●	●
SFV7D201K	K	130	170	180	220	340	10	1.75	17.5	250	●	●	●	●
SFV7D221K	K	140	180	198	242	360	10	1.75	19	230	●	●	●	●
SFV7D241K	K	150	200	216	264	395	10	1.75	21	210	●	●	●	●
SFV7D271K	K	175	225	243	297	455	10	1.75	24	185	●	●	●	●
SFV7D301K	K	190	250	270	330	500	10	1.75	26	165	●	●	●	●
SFV7D331K	K	210	275	297	363	550	10	1.75	28	150	●	●	●	●
SFV7D361K	K	230	300	324	396	595	10	1.75	32	140	●	●	●	●
SFV7D391K	K	250	320	351	429	650	10	1.75	35	130	●	●	●	●
SFV7D431K	K	275	350	387	473	710	10	1.75	40	115	●	●	●	●
SFV7D471K	K	300	385	423	517	775	10	1.75	42	105	●	●	●	●
SFV7D511K	K	320	415	459	561	845	10	1.75	45	100	●	●	●	●
SFV7D561K	K	350	460	504	616	925	10	1.75	49	90	●	●	●	●
SFV7D621K	K	385	505	558	682	1025	10	1.75	55	80	●	●	●	●
SFV7D681K	K	420	560	612	748	1120	10	1.75	60	75	●	●	●	●
SFV7D751K	K	460	615	675	825	1240	10	1.75	66	70	●	●	●	●
SFV7D821K	K	510	670	738	902	1355	10	1.75	71	65	●	●	●	●

●: Approved ○: Unauthorized ● RoHS & REACH Compliant

All Rights Reserved by Xiamen SET Electronics Co., Ltd. 2024-2026 V1.1

Performance Curve (For reference only)

- Max. Peak Current Derating Curves

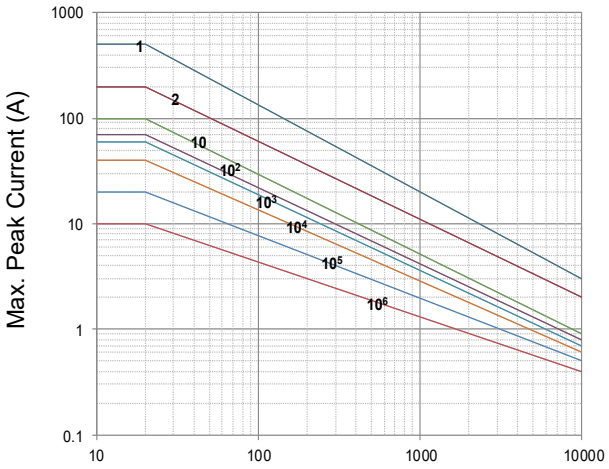

Impulse Duration (μs)

SFV7D220K to SFV7D680K

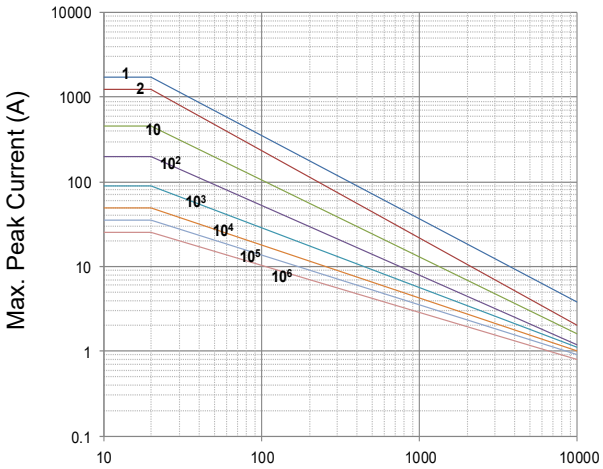

Impulse Duration (μs)

SFV7D820K to SFV7D821K

Note: 1, 2, 10, 10^2, 10^3, 10^4, 10^5, 10^6 Stand for Repetitions.

- Voltage-Current Characteristic Curves

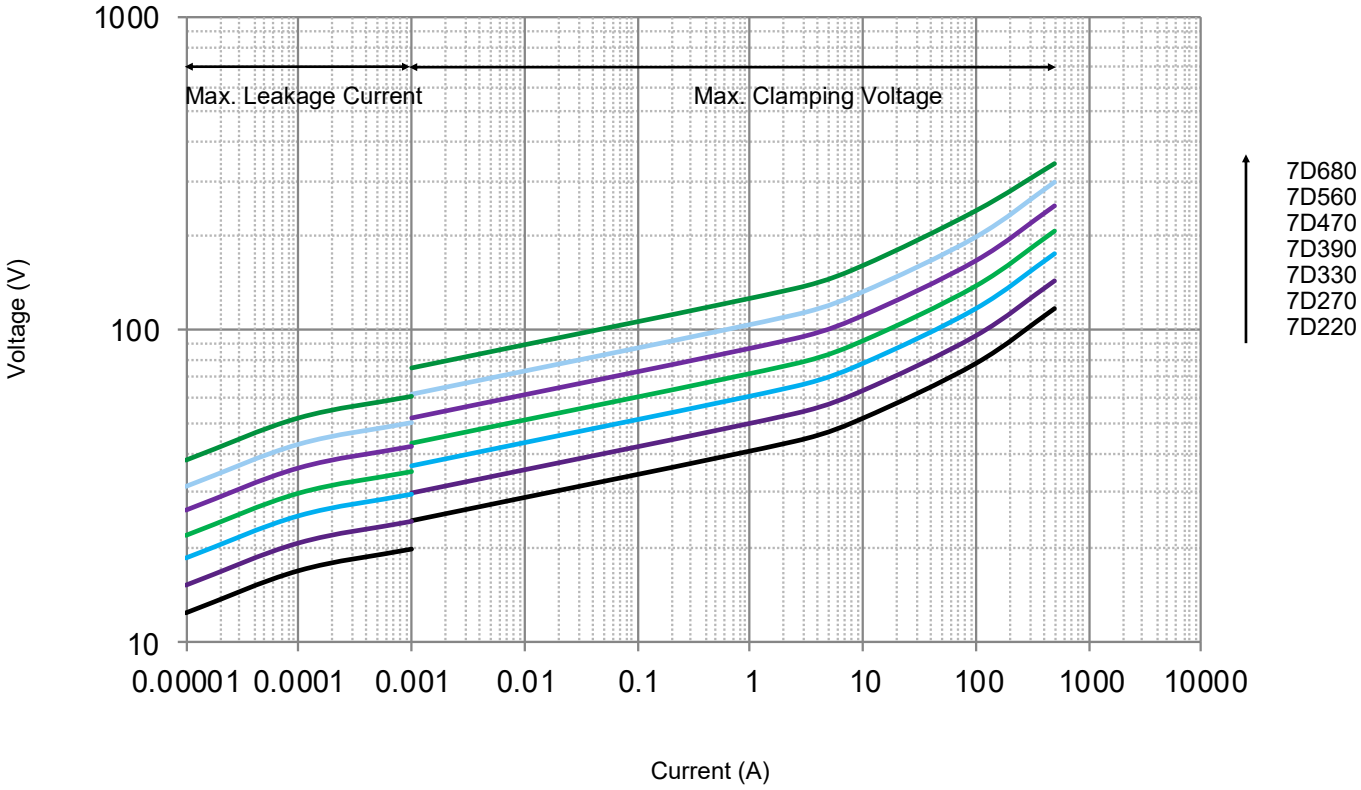

All Rights Reserved by Xiamen SET Electronics Co., Ltd. 2024-2026 V1.1

- Voltage-Current Characteristic Curves

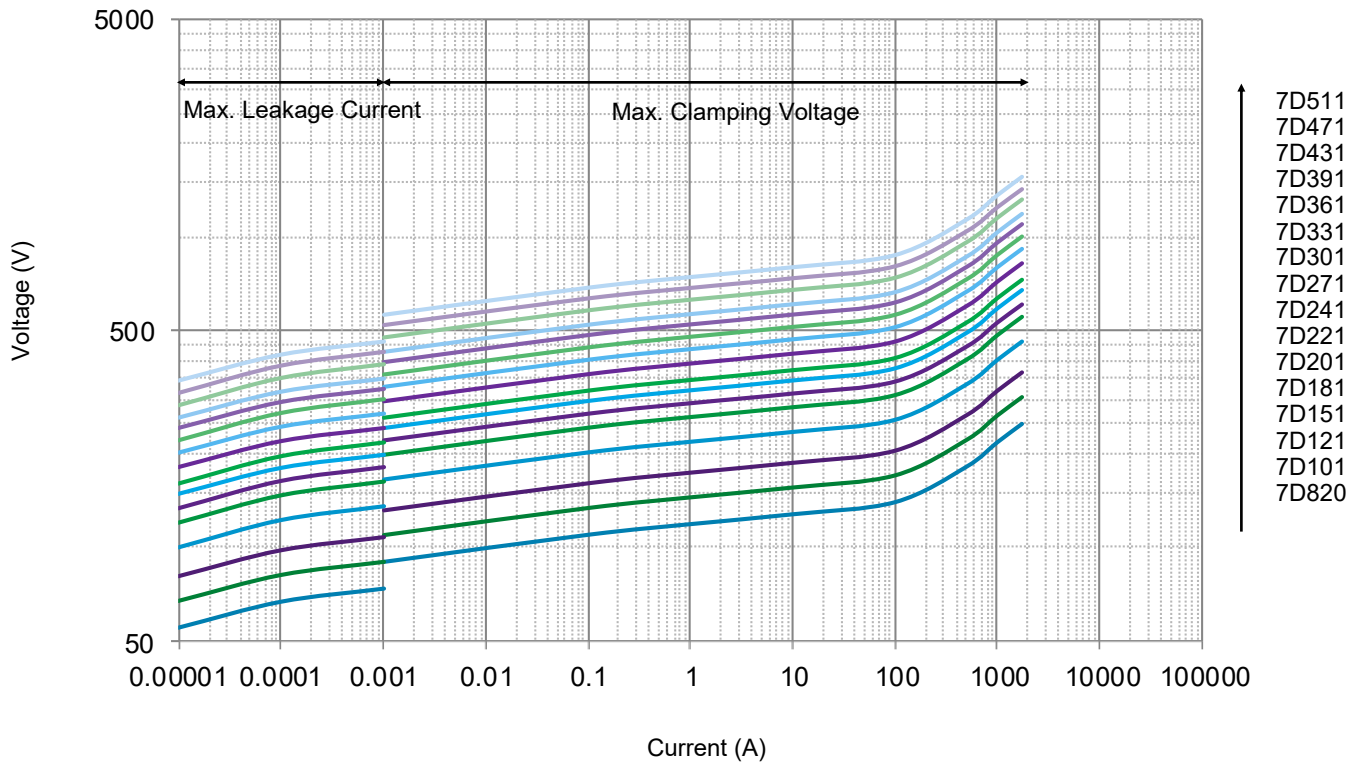

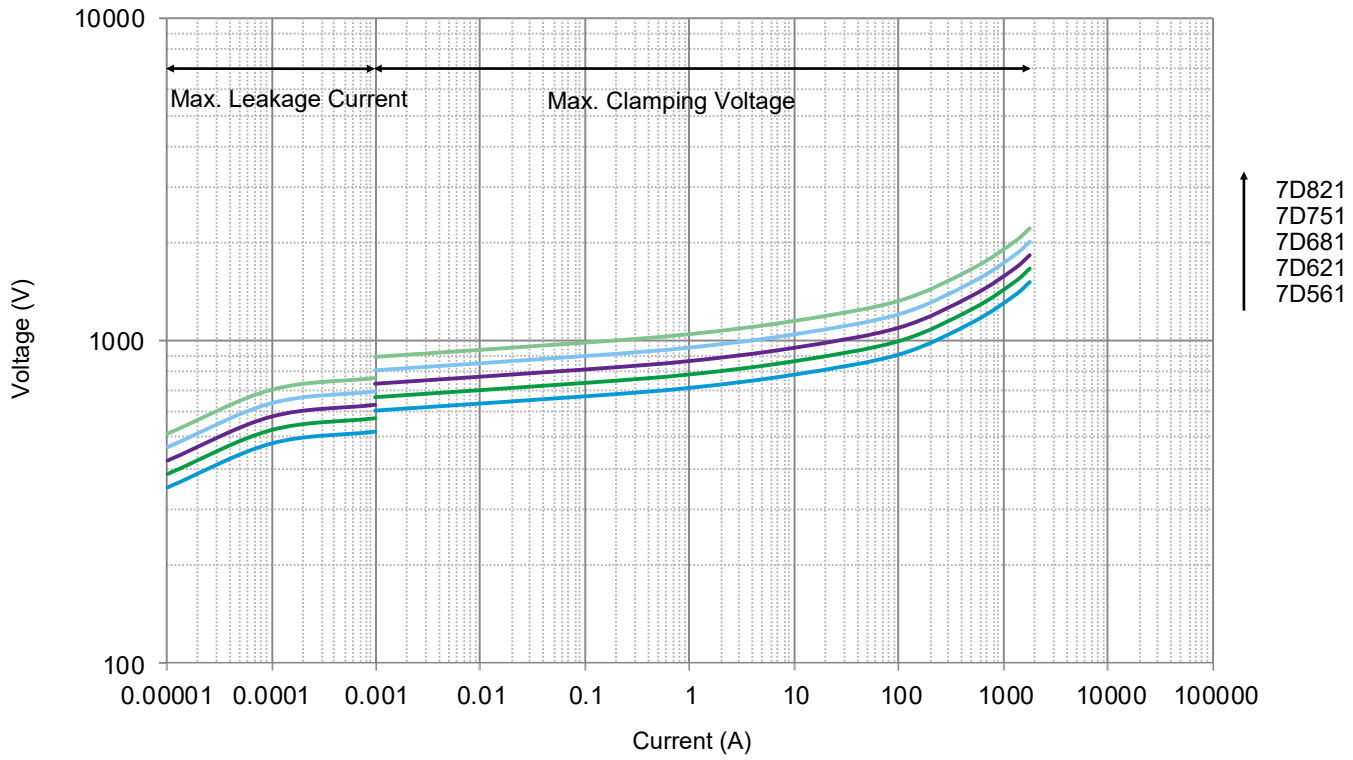

All Rights Reserved by Xiamen SET Electronics Co., Ltd. 2024-2026 V1.1

Packaging Information

- Bulk Packaging (Code: BUL)
- Bulk Packaging Quantity & Weight.

Series	Nominal Varistor Voltage	PE Bag	Box	Carton	G. W / Carton (365 × 265 × 245)
	(V)	(PCS)	(PCS)	(PCS)	(kg)±10%
SFV7D Series	220 ~ 471	1000	2000	12000	5 ~ 11
	511 ~ 821	800	1600	9600	8 ~ 13

Note:
Other lead length packaging information, please contact SETsafe | SETfuse.

All Dimensions in mm

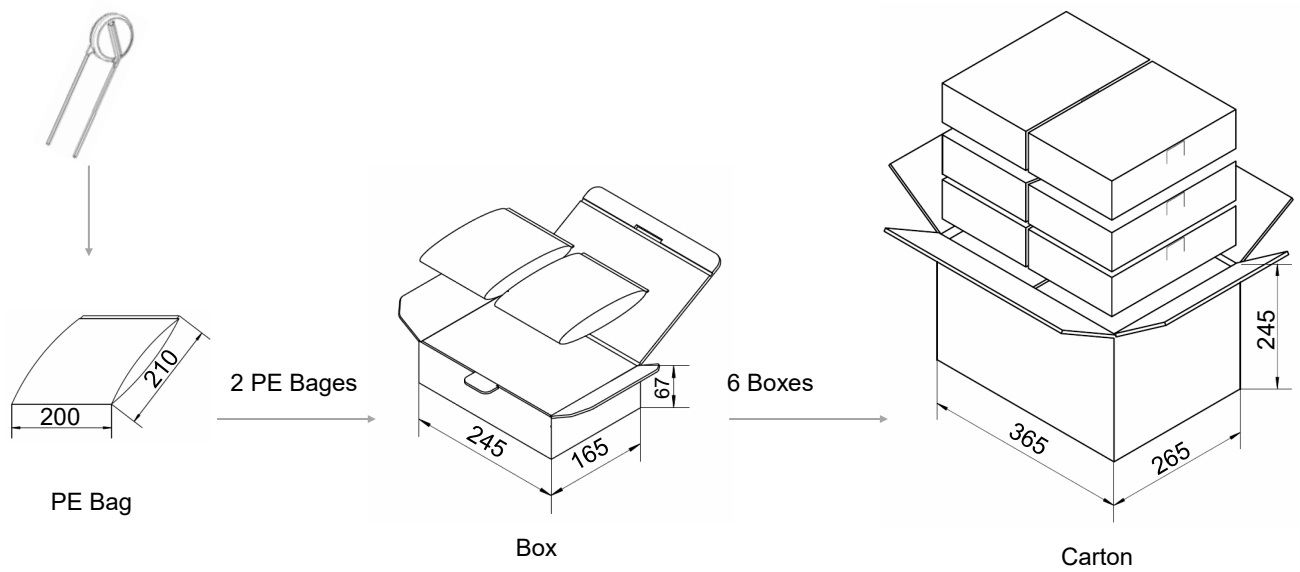

All Rights Reserved by Xiamen SET Electronics Co., Ltd. 2024-2026 V1.1

Packaging Information

- Tape Packaging (Code: 0AB)

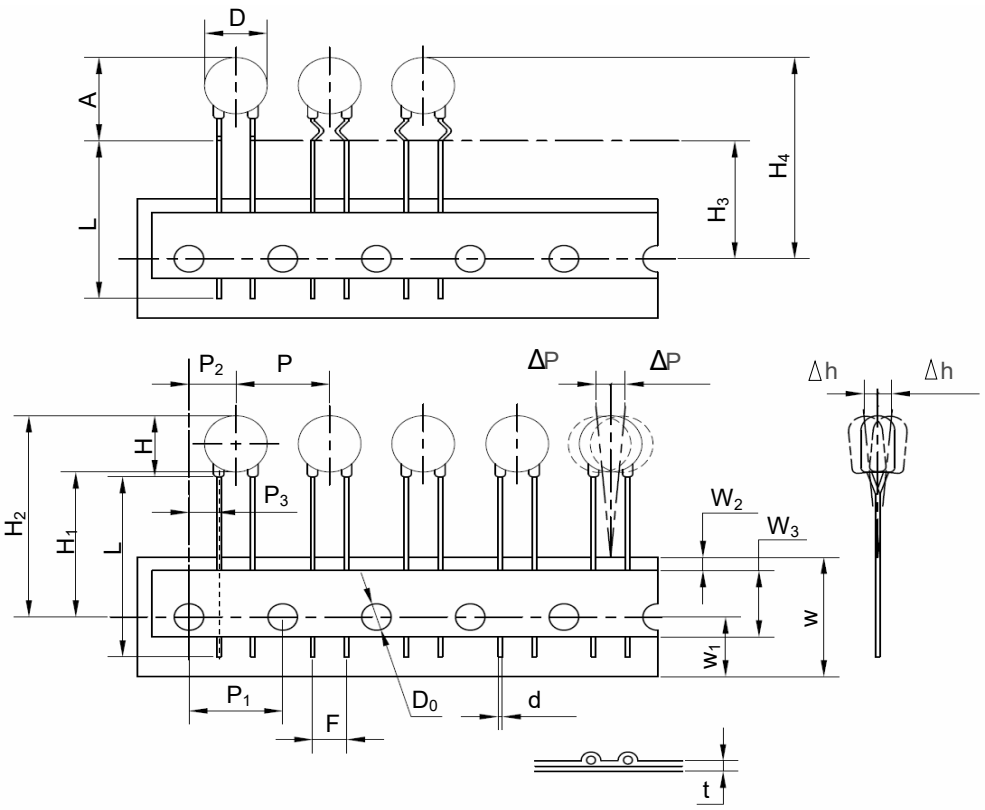

Dimensions (mm)	
P	12.7±1.0
P_1	12.7±0.3
P_2	6.35±1.30
P_3	3.85±1.00
ΔP(max.)	1.0
W	18.0±2.0
W_1	9.0±1.0
W_2(max.)	3.0
W_3	10.0±2.0
H(max.)	12.0
H_1	18.0
H_2(max.)	$32.0^{+2.0}_{-0}$
H_3	18.0
H_4(max.)	$33.0^{+2.0}_{-0}$
Δh(max.)	2.0
t (max.)	0.6
D(max.)	9.0
D_0	4.0±0.2
d	0.60±0.05
A(max.)	12.5
F	5.0±1.0
L(min.)	/

- Tape Packaging Quantity & Weight.

Series	Nominal Varistor Voltage	Box	Carton	G. W / Carton (365 × 265 × 415)
7D	(V)	(PCS)	(PCS)	(kg)±10%
	751 ~ 821	700	4900	6 ~ 7
	511 ~ 681	800	5600	5 ~ 6
	331 ~ 471	1000	7000	4 ~ 6
	820 ~ 301	1200	8400	4 ~ 6

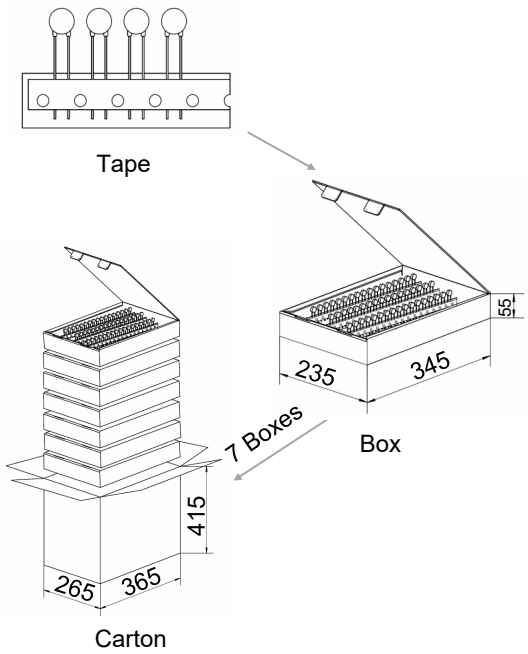

All Rights Reserved by Xiamen SET Electronics Co., Ltd. 2024-2026 V1.1

Packaging Information

- Reel Packaging (Code:0AR)

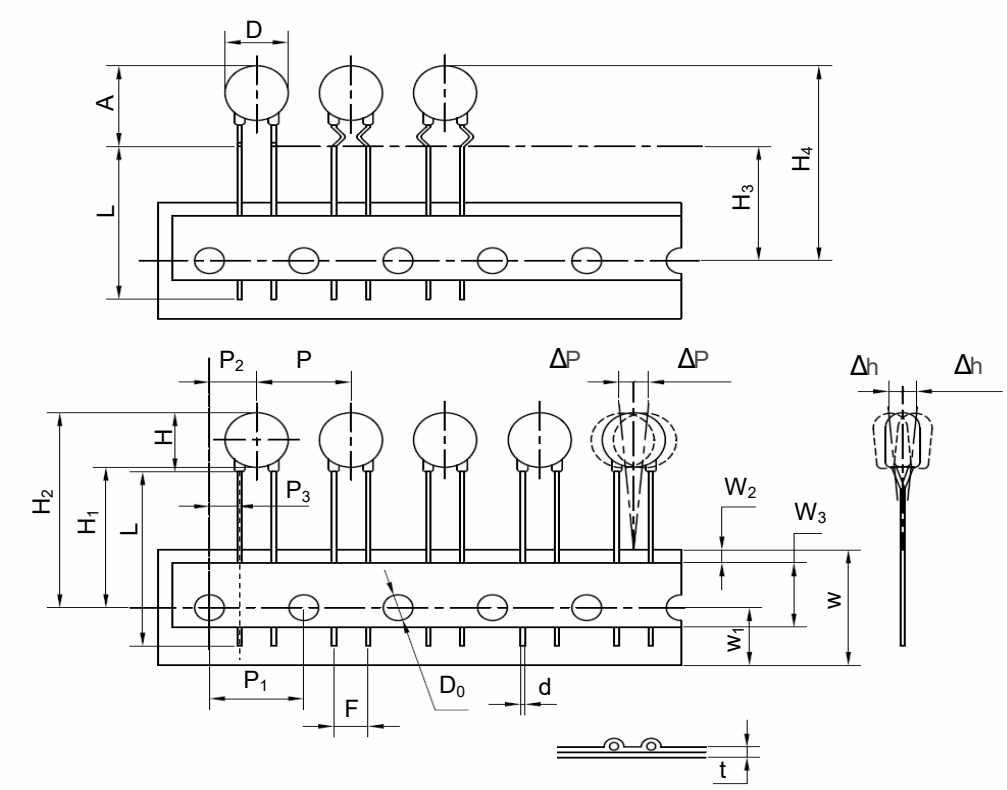

Dimensions (mm)	
P	12.7±1.0
P_1	12.7±0.3
P_2	6.35±1.30
P_3	3.85±1.00
ΔP(max.)	1.0
W	18.0±1.0
W_1	9.0±1.0
W_2(max.)	3.0
W_3	10.0±2.0
H(max.)	12.0
H_1	18.0
H_2(max.)	$32.0^{+2.0}_{-0}$
H_3	18.0
H_4(max.)	$33.0^{+2.0}_{-0}$
Δh(max.)	2.0
t (max.)	0.6
D(max.)	9.0
D_0	4.0±0.2
d	0.60±0.05
A(max.)	12.5
F	5.0±1.0
L(min.)	/

- Reel Packaging Quantity & Weight.

Series	Nominal Varistor Voltage	Box	Carton	G. W / Carton (375 × 335 × 385)
	(V)	(PCS)	(PCS)	(kg)±10%
7D	820 ~ 391	1500	7500	3 ~ 6
	431 ~ 821	1000	5000	4 ~ 7

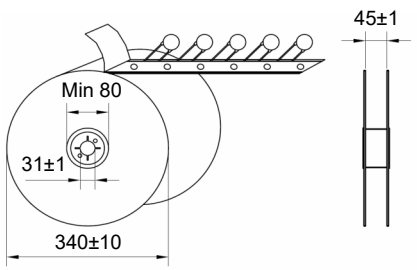

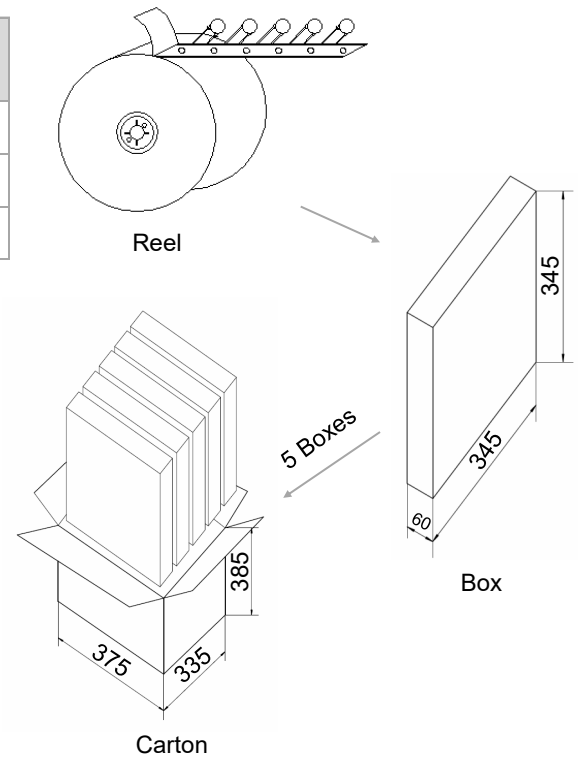

All Rights Reserved by Xiamen SET Electronics Co., Ltd. 2024-2026 V1.1

Dimensions (mm)

Model	L (Min.)	H (Max.)	T (Max.)	D (Max.)	d	F	F_1	A (Max.)
SFV10D220K	20	15.5	4.5	12.5	0.80±0.05	7.5±0.6	1.1 ~ 2.5	17.5
SFV10D270K	20	15.5	4.8	12.5	0.80±0.05	7.5±0.6	1.2 ~ 2.7	17.5
SFV10D330K	20	15.5	5.1	12.5	0.80±0.05	7.5±0.6	1.3 ~ 2.9	17.5
SFV10D390K	20	15.5	5.4	12.5	0.80±0.05	7.5±0.6	1.4 ~ 3.1	17.5
SFV10D470K	20	15.5	4.6	12.5	0.80±0.05	7.5±0.6	1.2 ~ 2.7	17.5
SFV10D560K	20	15.5	4.8	12.5	0.80±0.05	7.5±0.6	1.3 ~ 2.9	17.5
SFV10D680K	20	15.5	5.1	12.5	0.80±0.05	7.5±0.6	1.5 ~ 3.2	17.5
SFV10D820K	20	15.5	4.4	12.5	0.80±0.05	7.5±0.6	1.2 ~ 2.6	17.5
SFV10D101K	20	15.5	4.6	12.5	0.80±0.05	7.5±0.6	1.3 ~ 2.8	17.5
SFV10D121K	20	15.5	4.8	12.5	0.80±0.05	7.5±0.6	1.4 ~ 3.0	17.5
SFV10D151K	20	15.5	5.1	12.5	0.80±0.05	7.5±0.6	1.6 ~ 3.3	17.5
SFV10D181K	20	15.5	4.4	12.5	0.80±0.05	7.5±0.6	1.0 ~ 2.6	17.5
SFV10D201K	20	15.5	4.6	12.5	0.80±0.05	7.5±0.6	1.1 ~ 2.7	17.5
SFV10D221K	20	15.5	4.7	12.5	0.80±0.05	7.5±0.6	1.2 - 2.8	17.5
SFV10D241K	20	15.5	4.8	12.5	0.80±0.05	7.5±0.6	1.3 ~ 2.9	17.5
SFV10D271K	20	15.5	4.9	12.5	0.80±0.05	7.5±0.6	1.4 ~ 3.1	17.5
SFV10D301K	20	15.5	5.1	12.5	0.80±0.05	7.5±0.6	1.5 ~ 3.2	17.5
SFV10D331K	20	15.5	5.3	12.5	0.80±0.05	7.5±0.6	1.6 ~ 3.3	17.5
SFV10D361K	20	15.5	5.4	12.5	0.80±0.05	7.5±0.6	1.7 ~ 3.5	17.5
SFV10D391K	20	15.5	5.6	12.5	0.80±0.05	7.5±0.6	1.8 ~ 3.6	17.5
SFV10D431K	20	15.5	5.8	12.5	0.80±0.05	7.5±0.6	1.8 ~ 3.8	17.5
SFV10D471K	20	15.5	6.1	12.5	0.80±0.05	7.5±0.6	2.0 ~ 4.0	17.5
SFV10D511K	20	15.5	6.3	12.5	0.80±0.05	7.5±0.6	2.2 ~ 4.2	17.5
SFV10D561K	20	15.5	6.6	12.5	0.80±0.05	7.5±0.6	2.4 ~ 4.4	17.5
SFV10D621K	20	15.5	6.9	12.5	0.80±0.05	7.5±0.6	2.7 ~ 4.7	17.5
SFV10D681K	20	15.5	7.2	12.5	0.80±0.05	7.5±0.6	3.0 ~ 5.0	17.5
SFV10D751K	20	15.5	7.6	12.5	0.80±0.05	7.5±0.6	3.3 ~ 5.3	17.5
SFV10D821K	20	15.5	8.0	12.5	0.80±0.05	7.5±0.6	3.6 ~ 5.6	17.5
SFV10D911K	20	15.5	8.5	12.5	0.80±0.05	7.5±0.6	4.0 ~ 6.0	17.5
SFV10D102K	20	15.5	9.0	12.5	0.80±0.05	7.5±0.6	4.5 ~ 6.5	17.5
SFV10D112K	20	15.5	9.6	12.5	0.80±0.05	7.5±0.6	4.9 ~ 6.9	17.5
SFV10D122K	20	15.5	10.1	12.5	0.80±0.05	7.5±0.6	5.4 ~ 7.4	17.5

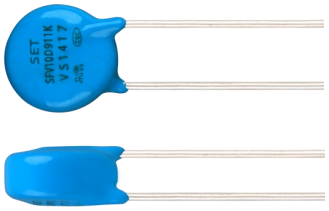

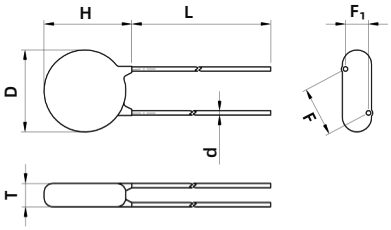

Straight Lead (A)

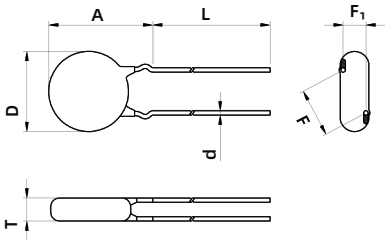

Outward Crimp (C)

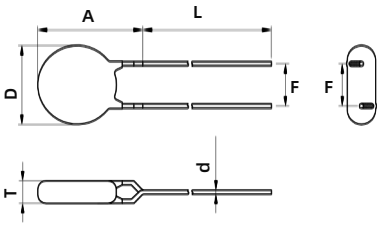

Inline Crimp (D)

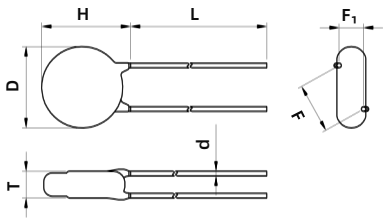

Little Straight Lead (I)

Note:
The above data is for reference only.

All Rights Reserved by Xiamen SET Electronics Co., Ltd. 2024-2026 V1.1

Specification

Model	Surge Level	Max. Continuous Operating Voltage		Varistor Voltage @1 mA DC		Clamping Voltage (Max.)		Max. Peak Current (1 time, 8/20 μs)	Max. Energy (10/1000 μs)	Typical Capacitance (For reference only) @1 kHz	Agency Information			
		VAC	VDC	Min.	Max.	V_C	I_P	S		(pF)	UL	cUL	TUV	CQC
		(V)	(V)	(V)	(V)	(V)	(A)	(kA)	(J)					
SFV10D220K	S	14	18	20	24	43	5	0.5	2.5	4500	●	●	●	●
SFV10D270K	S	17	22	24	31	53	5	0.5	3.0	3700	●	●	●	●
SFV10D330K	S	20	26	30	36	65	5	0.5	4.0	3000	●	●	●	●
SFV10D390K	S	25	31	35	43	77	5	0.5	4.6	2400	●	●	●	●
SFV10D470K	S	30	38	42	52	93	5	0.5	5.5	2100	●	●	●	●
SFV10D560K	S	35	45	50	62	110	5	0.5	7.0	1800	●	●	●	●
SFV10D680K	S	40	56	61	75	135	5	0.5	8.2	1500	●	●	●	●
SFV10D820K	S	50	65	74	90	135	25	2.5	12	1200	●	●	●	●
SFV10D101K	S	60	85	90	110	165	25	2.5	15	1000	●	●	●	●
SFV10D121K	S	75	100	108	132	200	25	2.5	18	830	●	●	●	●
SFV10D151K	S	95	125	135	165	250	25	2.5	22	670	●	●	●	●
SFV10D181K	S	115	150	162	198	300	25	2.5	27	560	●	●	●	●
SFV10D201K	S	130	170	180	220	340	25	2.5	30	500	●	●	●	●
SFV10D221K	S	140	180	198	242	360	25	2.5	32	450	●	●	●	●
SFV10D241K	S	150	200	216	264	395	25	2.5	35	420	●	●	●	●
SFV10D271K	S	175	225	243	297	455	25	2.5	40	370	●	●	●	●
SFV10D301K	S	190	250	270	330	500	25	2.5	40	330	●	●	●	●
SFV10D331K	S	210	275	297	363	550	25	2.5	43	300	●	●	●	●
SFV10D361K	S	230	300	324	396	595	25	2.5	47	280	●	●	●	●
SFV10D391K	S	250	320	351	429	650	25	2.5	60	260	●	●	●	●
SFV10D431K	S	275	350	387	473	710	25	2.5	65	230	●	●	●	●
SFV10D471K	S	300	385	423	517	775	25	2.5	70	210	●	●	●	●
SFV10D511K	S	320	415	459	561	845	25	2.5	70	200	●	●	●	●
SFV10D561K	S	350	460	504	616	925	25	2.5	70	180	●	●	●	●
SFV10D621K	S	385	505	558	682	1025	25	2.5	70	160	●	●	●	●
SFV10D681K	S	420	560	612	748	1120	25	2.5	70	150	●	●	●	●
SFV10D751K	S	460	615	675	825	1240	25	2.5	75	130	●	●	○	●
SFV10D821K	S	510	670	738	902	1355	25	2.5	85	120	●	●	○	●
SFV10D911K	S	550	745	819	1001	1500	25	2.5	93	110	●	●	○	●
SFV10D102K	S	625	825	900	1100	1650	25	2.5	102	100	●	●	○	●
SFV10D112K	S	680	895	990	1210	1815	25	2.5	115	90	●	●	○	●
SFV10D122K	S	750	990	1080	1320	1980	25	2.5	125	55	●	●	○	●

●: Approved ○: Unauthorized ● RoHS & REACH Compliant

All Rights Reserved by Xiamen SET Electronics Co., Ltd. 2024-2026 V1.1

Specification

Model	Surge Level	Max. Continuous Operating Voltage		Varistor Voltage @1 mA DC		Clamping Voltage (Max.)		Max. Peak Current (1 time, 8/20 μs)	Max. Energy (10/1000 μs)	Typical Capacitance (For reference only) @1 kHz	Agency Information			
		VAC	VDC	Min.	Max.	V_C	I_P	K		(pF)	UL	cUL	TUV	CQC
		(V)	(V)	(V)	(V)	(V)	(A)	(kA)	(J)					
SFV10D220K	K	14	18	20	24	43	5	1.0	3.2	4500	●	●	●	●
SFV10D270K	K	17	22	24	31	53	5	1.0	3.9	3700	●	●	●	●
SFV10D330K	K	20	26	30	36	65	5	1.0	4.8	3000	●	●	●	●
SFV10D390K	K	25	31	35	43	77	5	1.0	5.6	2400	●	●	●	●
SFV10D470K	K	30	38	42	52	93	5	1.0	6.8	2100	●	●	●	●
SFV10D560K	K	35	45	50	62	110	5	1.0	8.1	1800	●	●	●	●
SFV10D680K	K	40	56	61	75	135	5	1.0	9.8	1500	●	●	●	●
SFV10D820K	K	50	65	74	90	135	25	3.5	14	1200	●	●	●	●
SFV10D101K	K	60	85	90	110	165	25	3.5	17	1000	●	●	●	●
SFV10D121K	K	75	100	108	132	200	25	3.5	20	830	●	●	●	●
SFV10D151K	K	95	125	135	165	250	25	3.5	25	670	●	●	●	●
SFV10D181K	K	115	150	162	198	300	25	3.5	30	560	●	●	●	●
SFV10D201K	K	130	170	180	220	340	25	3.5	35	500	●	●	●	●
SFV10D221K	K	140	180	198	242	360	25	3.5	39	450	●	●	●	●
SFV10D241K	K	150	200	216	264	395	25	3.5	42	420	●	●	●	●
SFV10D271K	K	175	225	243	297	455	25	3.5	49	370	●	●	●	●
SFV10D301K	K	190	250	270	330	500	25	3.5	54	330	●	●	●	●
SFV10D331K	K	210	275	297	363	550	25	3.5	58	300	●	●	●	●
SFV10D361K	K	230	300	324	396	595	25	3.5	65	280	●	●	●	●
SFV10D391K	K	250	320	351	429	650	25	3.5	70	260	●	●	●	●
SFV10D431K	K	275	350	387	473	710	25	3.5	80	230	●	●	●	●
SFV10D471K	K	300	385	423	517	775	25	3.5	85	210	●	●	●	●
SFV10D511K	K	320	415	459	561	845	25	3.5	90	200	●	●	●	●
SFV10D561K	K	350	460	504	616	925	25	3.5	92	180	●	●	●	●
SFV10D621K	K	385	505	558	682	1025	25	3.5	95	160	●	●	●	●
SFV10D681K	K	420	560	612	748	1120	25	3.5	98	150	●	●	●	●
SFV10D751K	K	460	615	675	825	1240	25	3.5	100	130	●	●	○	●
SFV10D821K	K	510	670	738	902	1355	25	3.5	110	120	●	●	○	●
SFV10D911K	K	550	745	819	1001	1500	25	3.5	130	110	●	●	○	●
SFV10D102K	K	625	825	900	1100	1650	25	3.5	140	100	●	●	○	●
SFV10D112K	K	680	895	990	1210	1815	25	3.5	155	90	●	●	○	●
SFV10D122K	K	750	990	1080	1320	1980	25	3.5	170	55	●	●	○	●

●: Approved ○: Unauthorized ● RoHS & REACH Compliant

All Rights Reserved by Xiamen SET Electronics Co., Ltd. 2024-2026 V1.1

Specification

Model	Surge Level	Max. Continuous Operating Voltage		Varistor Voltage @1 mA DC		Clamping Voltage (Max.)		Pulse Impact Performance (40 times) (1.2/50 μs & 8/20 μs)	Max. Energy (10/1000 μs)	Typical Capacitance (For reference only) @1 kHz	Agency Information			
		VAC	VDC	Min.	Max.	V_C	I_P	Q		(pF)	UL	cUL	TUV	CQC
		(V)	(V)	(V)	(V)	(V)	(A)	(kV)	(J)					
SFV10D201K	Q	130	170	180	220	340	25	4.5	35	500	●	●	●	●
SFV10D221K	Q	140	180	198	242	360	25	4.5	39	450	●	●	●	●
SFV10D241K	Q	150	200	216	264	395	25	4.5	42	420	●	●	●	●
SFV10D271K	Q	175	225	243	297	455	25	4.5	49	370	●	●	●	●
SFV10D301K	Q	190	250	270	330	500	25	4.5	54	330	●	●	●	●
SFV10D331K	Q	210	275	297	363	550	25	4.5	58	300	●	●	●	●
SFV10D361K	Q	230	300	324	396	595	25	4.5	65	280	●	●	●	●
SFV10D391K	Q	250	320	351	429	650	25	4.5	70	260	●	●	●	●
SFV10D431K	Q	275	350	387	473	710	25	4.5	80	230	●	●	●	●
SFV10D471K	Q	300	385	423	517	775	25	4.5	85	210	●	●	●	●
SFV10D511K	Q	320	415	459	561	845	25	4.5	90	200	●	●	●	●
SFV10D561K	Q	350	460	504	616	925	25	4.5	92	180	●	●	●	●
SFV10D621K	Q	385	505	558	682	1025	25	4.5	95	160	●	●	●	●
SFV10D681K	Q	420	560	612	748	1120	25	4.5	98	150	●	●	●	●

●: Approved ○: Unauthorized ● RoHS & REACH Compliant

All Rights Reserved by Xiamen SET Electronics Co., Ltd. 2024-2026 V1.1

Performance Curve (For reference only)

- Max. Peak Current Derating Curves

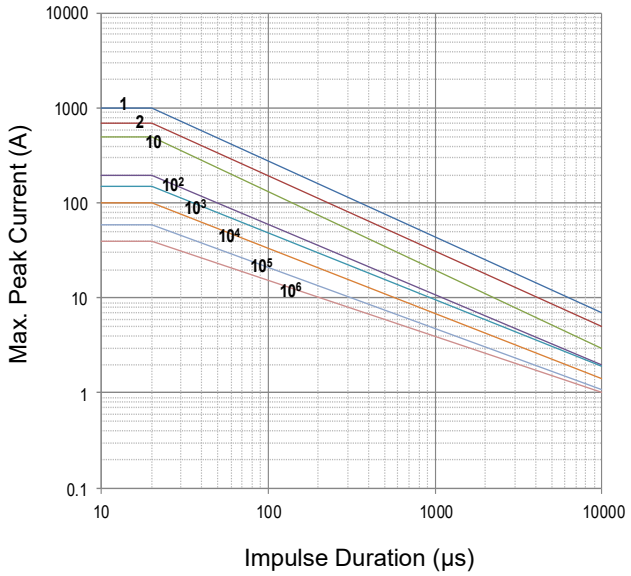

SFV10D220K to SFV10D680K

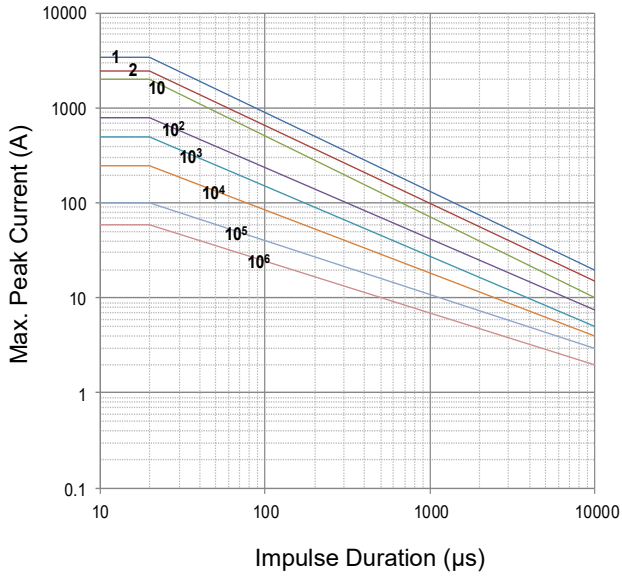

SFV10D820K to SFV10D122K

Note: 1, 2, 10, 10^2, 10^3, 10^4, 10^5, 10^6 Stand for Repetitions.

- Voltage-Current Characteristic Curves

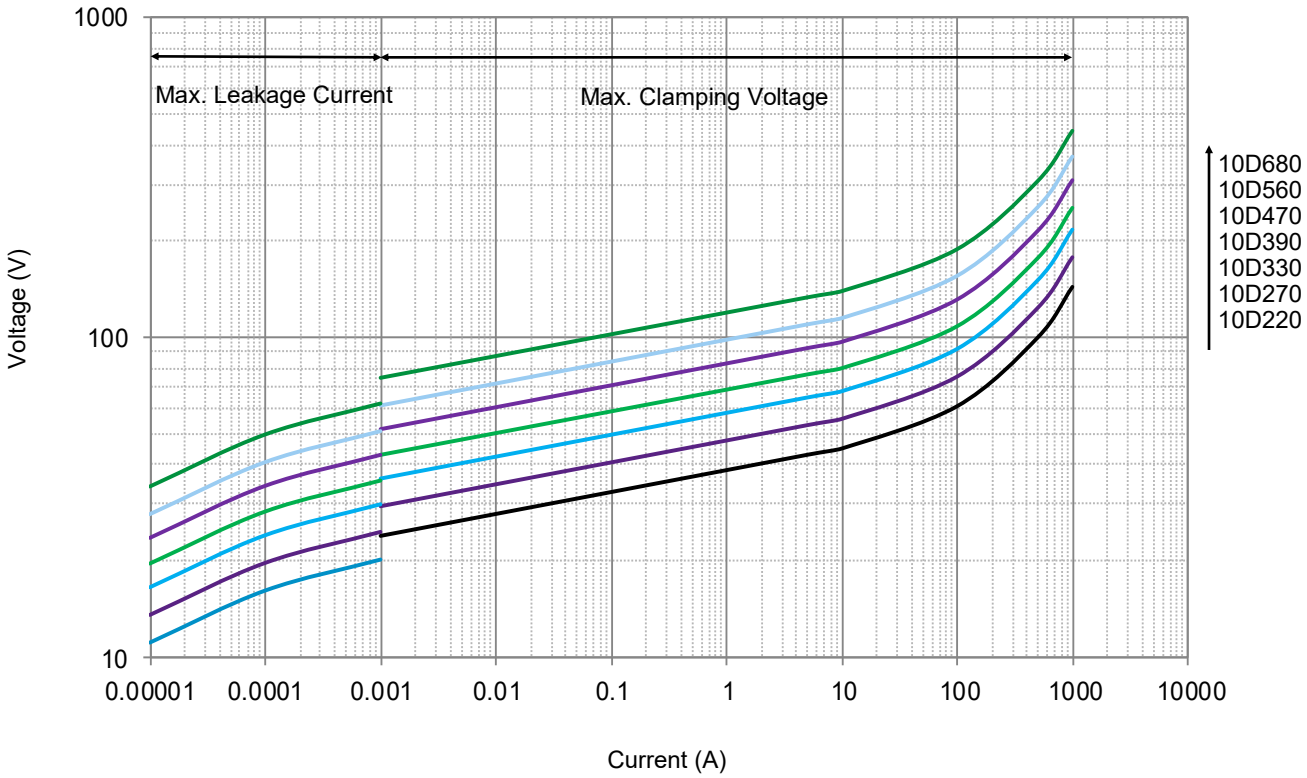

All Rights Reserved by Xiamen SET Electronics Co., Ltd. 2024-2026 V1.1

- Voltage-Current Characteristic Curves

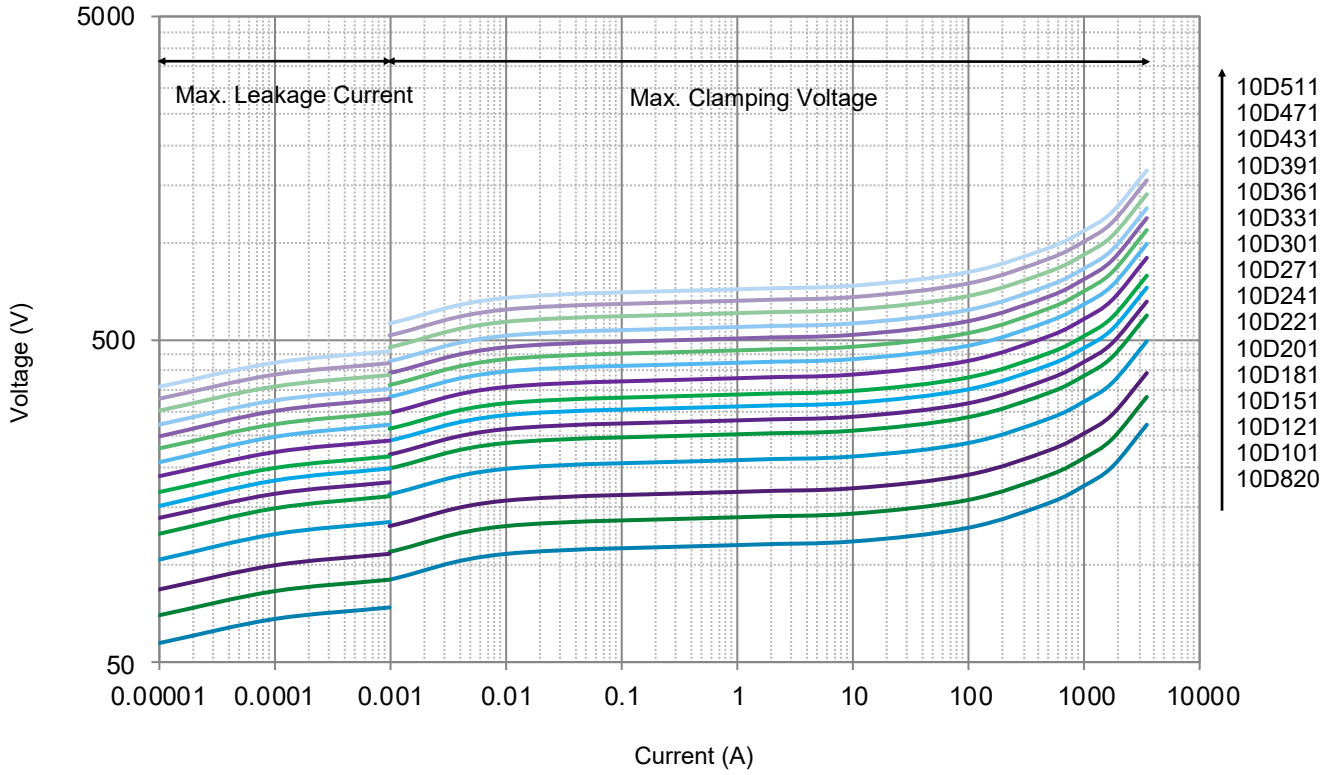

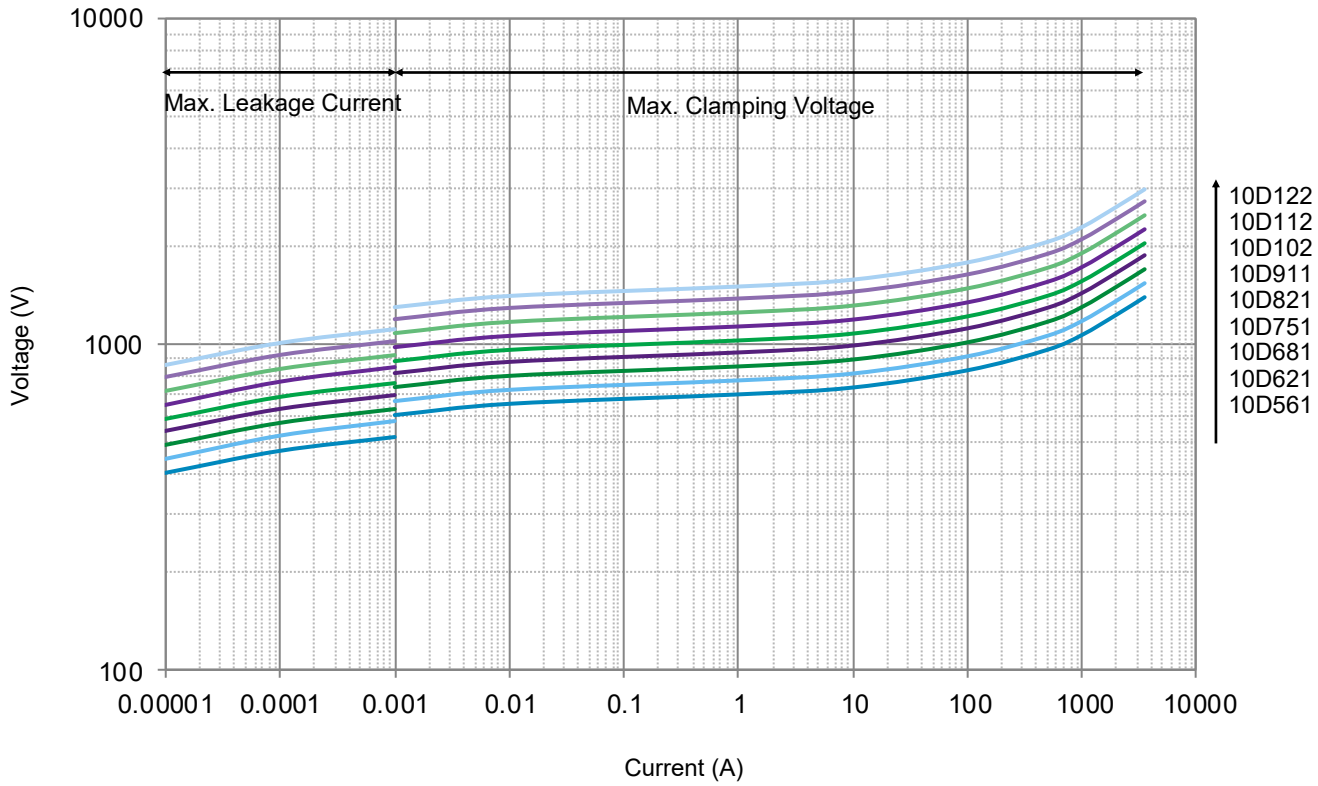

All Rights Reserved by Xiamen SET Electronics Co., Ltd. 2024-2026 V1.1

Packaging Information

- Bulk Packaging (Code: BUL)
- Bulk Packaging Quantity & Weight.

Series	Nominal Varistor Voltage	PE Bag	Box	Carton	G. W / Carton (365 × 265 × 245)
	(V)	(PCS)	(PCS)	(PCS)	(kg)±10%
SFV10D Series	220 ~ 821	500	1000	6000	5 ~ 16
	911 ~ 122	400	800	4800	14 ~ 18

Note:
Other lead length packaging information, please contact SETsafe | SETfuse.

All Dimensions in mm

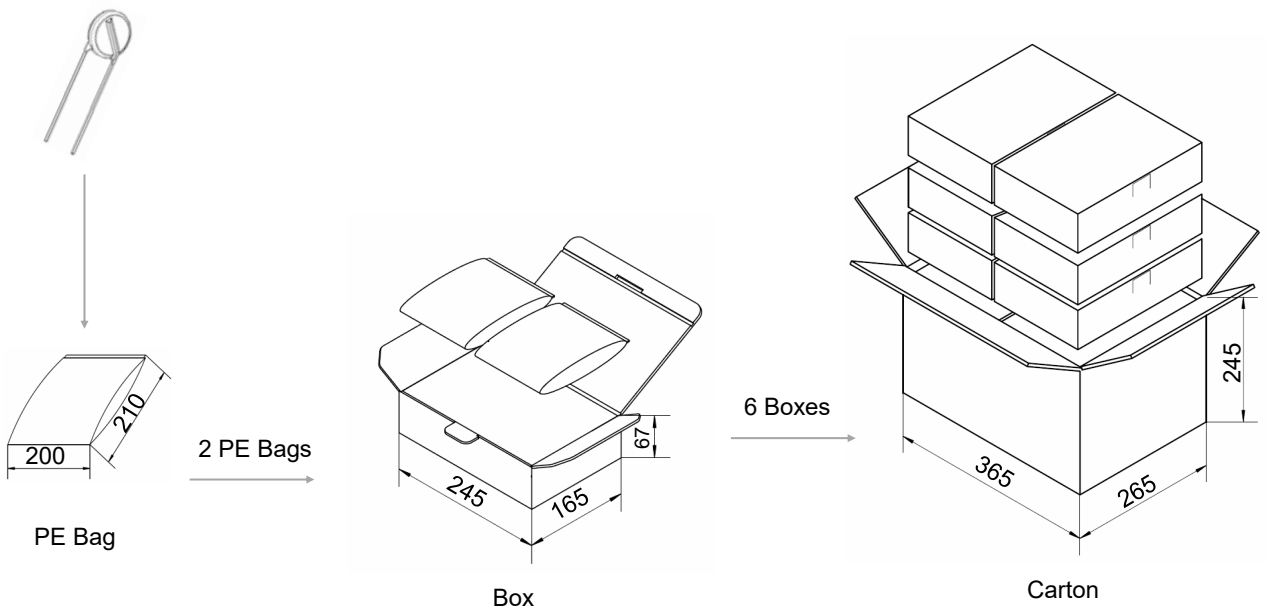

All Rights Reserved by Xiamen SET Electronics Co., Ltd. 2024-2026 V1.1

Packaging Information

- Tape Packaging (Code: 0AB)

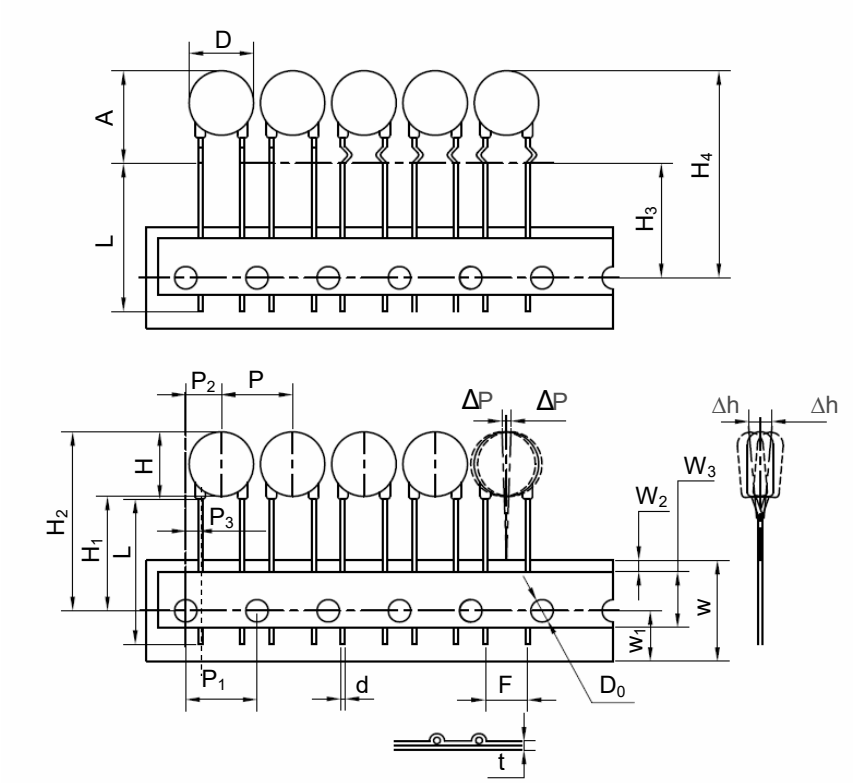

Dimensions (mm)	
P	12.7±1.0
P_1	12.7±0.3
P_2	6.35±1.30
P_3	2.6±0.7
ΔP(max.)	1.0
W	18.0±1.0
W_1	9.0±1.0
W_2(max.)	3.0
W_3	10.0±2.0
H(max.)	15.5
H_1	18.0
H_2(max.)	$36.0^{+2.0}_{-0}$
H_3	18.0
H_4(max.)	$38.0^{+2.0}_{-0}$
Δh(max.)	2.0
t (max.)	0.6
D(max.)	12.5
D_0	4.0±0.2
d	0.80±0.05
A(max.)	17.5
F	7.5±1.0
L(min.)	/

- Tape Packaging Quantity & Weight.

Series	Nominal Varistor Voltage	Box	Carton	G. W / Carton (365 × 265 × 415)
	(V)	(PCS)	(PCS)	(kg)±10%
10D	112 ~ 122	550	3850	12 ~ 13
	911 ~ 102	600	4200	11 ~ 13
	751 ~ 821	700	4900	11 ~ 13
	471 ~ 681	800	5600	9 ~ 13
	391 ~ 431	1000	7000	10 ~ 11
	331 ~ 361	1100	7700	10 ~ 11
	680			
	271 ~ 301	1200	8400	10 ~ 11
	151			
	560			
	180 ~ 241	1300	9100	9 ~ 11
	820 ~ 121			8 ~ 10
	220 ~ 470			7 ~ 11

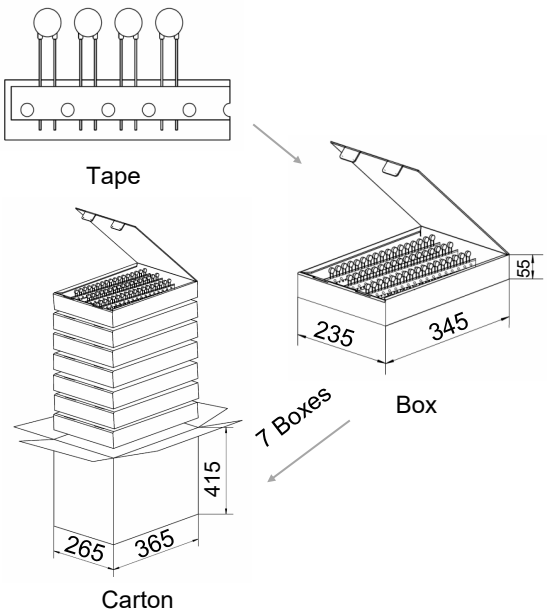

All Rights Reserved by Xiamen SET Electronics Co., Ltd. 2024-2026 V1.1

Packaging Information

- Tape Packaging (Code: 1AB)

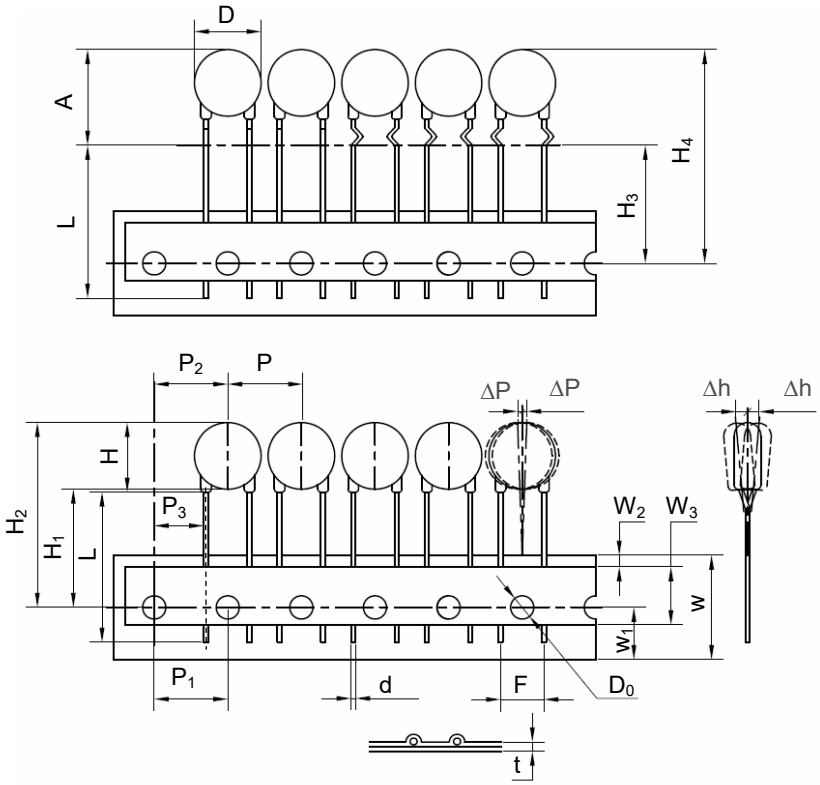

Dimensions (mm)	
P	12.7±1.0
P_1	12.7±0.3
P_2	12.7±1.30
P_3	8.95±0.7
ΔP(max.)	1.0
W	18.0±1.0
W_1	9.0±1.0
W_2(max.)	3.0
W_3	10.0±2.0
H(max.)	15.5
H_1	18.0
H_2(max.)	$36.0^{+2.0}_{-0}$
H_3	18.0
H_4(max.)	$38.0^{+2.0}_{-0}$
Δh(max.)	2.0
t (max.)	0.6
D(max.)	12.5
D_0	4.0±0.2
d	0.80±0.05
A(max.)	17.5
F	7.5±1.0
L(min.)	/

- Tape Packaging Quantity & Weight.

Series	Nominal Varistor Voltage	Box	Carton	G. W / Carton (365 × 265 × 415)
	(V)	(PCS)	(PCS)	(kg)±10%
10D	112 ~ 122	550	3850	12 ~ 13
	911 ~ 102	600	4200	11 ~ 13
	751 ~ 821	700	4900	11 ~ 13
	471 ~ 681	800	5600	9 ~ 13
	391 ~ 431	1000	7000	10 ~ 11
	331 ~ 361	1100	7700	10 ~ 11
	680			
	271 ~ 301	1200	8400	10 ~ 11
	151			
	560			
	180 ~ 241	1300	9100	9 ~ 11
	820 ~ 121			8 ~ 10
	220 ~ 470			7 ~ 11

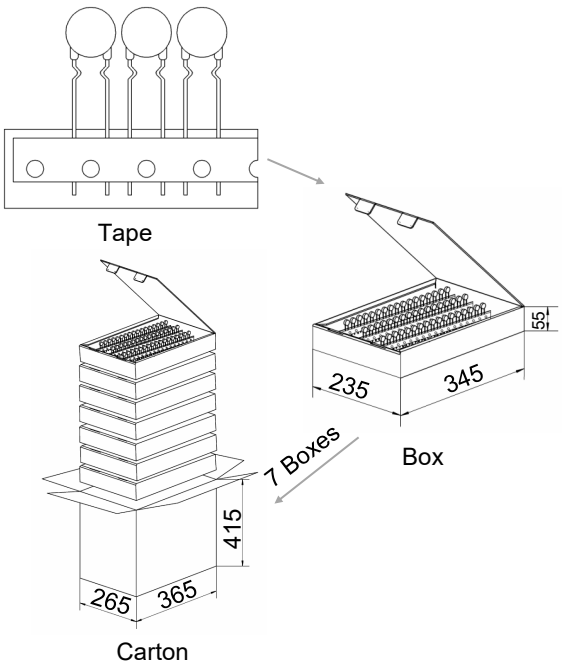

All Rights Reserved by Xiamen SET Electronics Co., Ltd. 2024-2026 V1.1

Packaging Information

- Tape Packaging (Code: 0EB)

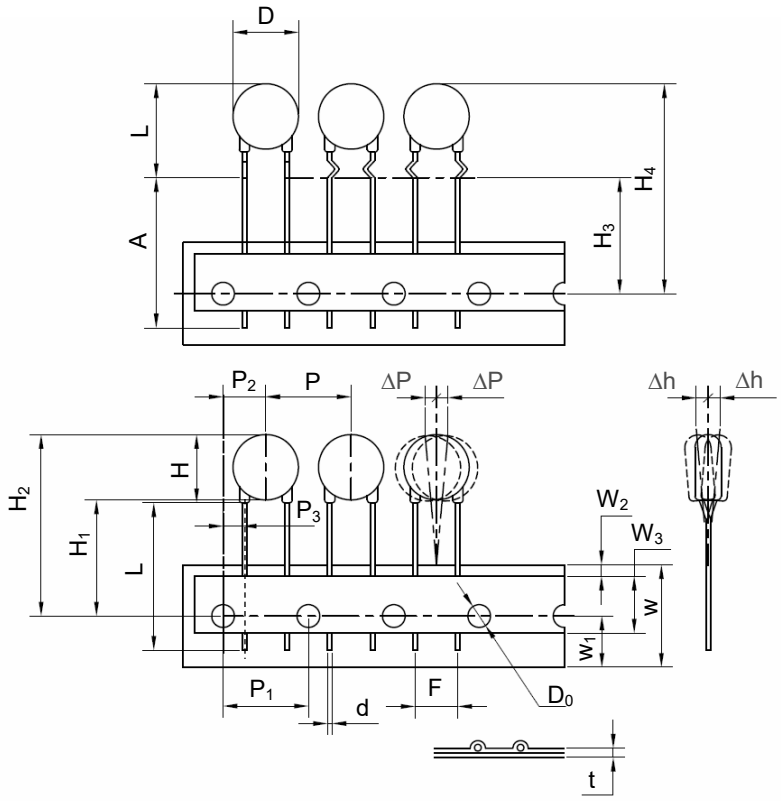

Dimensions (mm)	
P	15.0±1.0
P_1	15.0±0.3
P_2	7.5±1.3
P_3	3.75±1.0
ΔP(max.)	1.0
W	18.0±1.0
W_1	9.0±1.0
W_2(max.)	3.0
W_3	10.0±2.0
H(max.)	15.5
H_1	18.0
H_2(max.)	$36.0^{+2.0}_{-0}$
H_3	18.0
H_4(max.)	$38.0^{+2.0}_{-0}$
Δh(max.)	2.0
t (max.)	0.6
D(max.)	12.5
D_0	4.0±0.2
d	0.80±0.05
A(max.)	17.5
F	7.5±1.0
L(min.)	/

- Tape Packaging Quantity & Weight.

Series	Nominal Varistor Voltage	Box	Carton	G. W / Carton (365 × 265 × 415)
	(V)	(PCS)	(PCS)	(kg)±10%
10D	911 ~ 122	500	3500	9 ~ 12
	751 ~ 821	600	4200	10 ~ 11
	621 ~ 681	700	4900	10 ~ 11
	431 ~ 561	800	5600	8 ~ 11
	271 ~ 391	1000	7000	8 ~ 10
	151			9
	560 ~ 680			9 ~ 10
	201 ~ 241	1100	7700	8 ~ 9
	121			
	390 ~ 470			
	181	1200	8400	7 ~ 8
	820 ~ 101			
	330			
	220 ~ 270	1300	9100	7 ~ 8

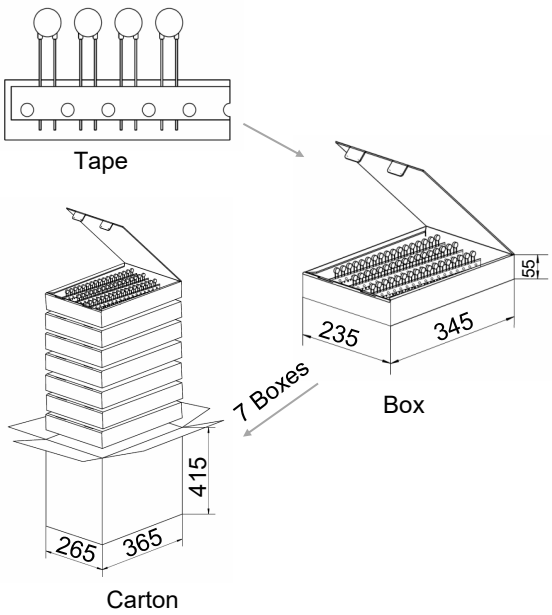

All Rights Reserved by Xiamen SET Electronics Co., Ltd. 2024-2026 V1.1

Packaging Information

- Reel Packaging (Code:1AR)

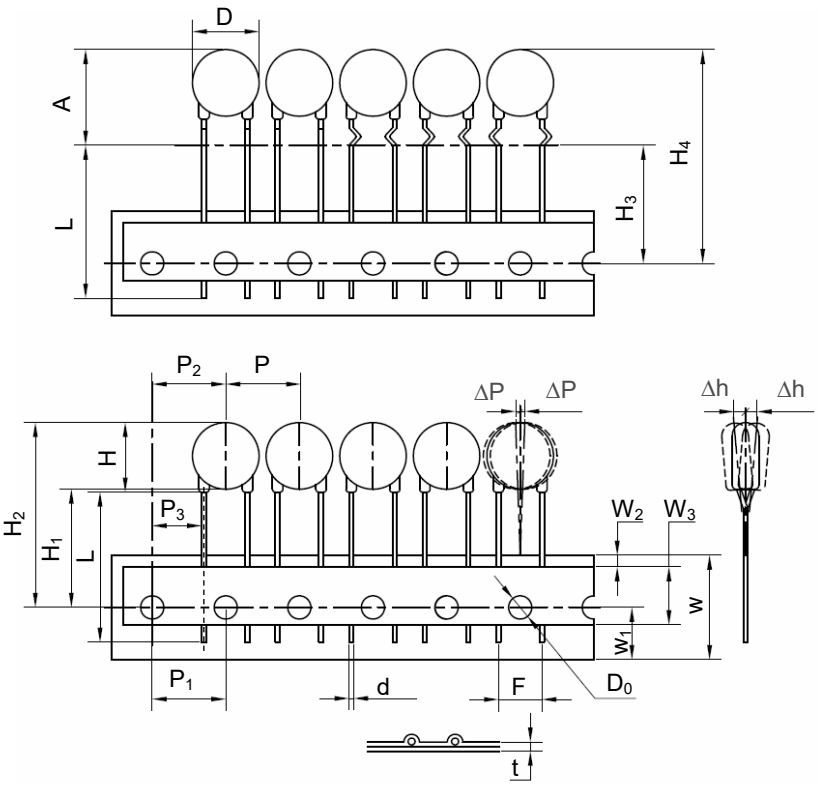

Dimensions (mm)	
P	12.7±1.0
P_1	12.7±0.3
P_2	12.7±1.30
P_3	8.95±0.7
ΔP(max.)	1.0
W	18.0±1.0
W_1	9.0±1.0
W_2(max.)	3.0
W_3	10.0±2.0
H(max.)	15.5
H_1	18.0
H_2(max.)	$36.0^{+2.0}_{-0}$
H_3	18.0
H_4(max.)	$38.0^{+2.0}_{-0}$
Δh(max.)	2.0
t (max.)	0.6
D(max.)	12.5
D_0	4.0±0.2
d	0.80±0.05
A(max.)	17.5
F	7.5±1.0
L(min.)	/

- Reel Packaging Quantity & Weight.

Series	Nominal Varistor Voltage	Box	Carton	G. W / Carto (375 × 335 × 385)
10D	(V)	(PCS)	(PCS)	(kg)±10%
	220 ~ 391	1500	7500	6 ~ 11
	431 ~ 561	1000	5000	8 ~ 10
	621 ~ 821	800	4000	8 ~ 11
	911 ~ 122	500	2500	7 ~ 9

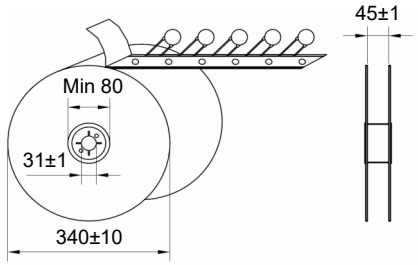

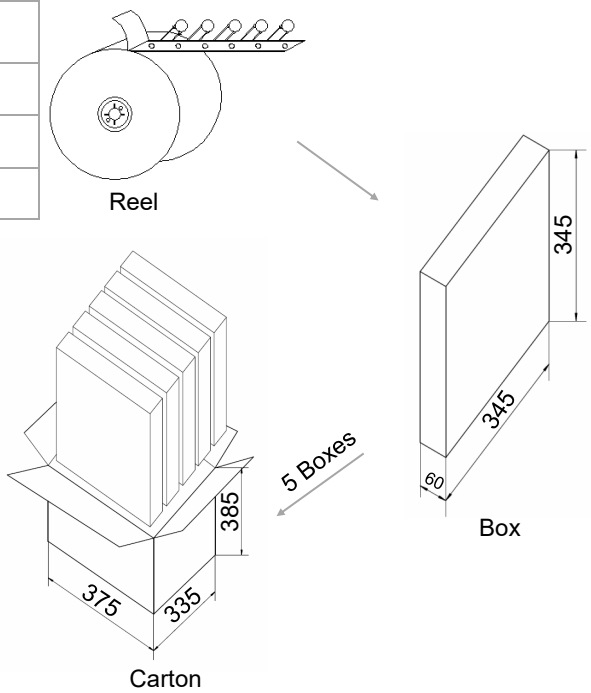

All Rights Reserved by Xiamen SET Electronics Co., Ltd. 2024-2026 V1.1

Dimensions (mm)

Model	L (Min.)	H (Max.)	T (Max.)	D (Max.)	d	F	F_1	A (Max.)
SFV14D220K	20	18.5	4.7	16.5	0.80±0.05	7.5±0.6	1.1 ~ 2.5	21.5
SFV14D270K	20	18.5	5.0	16.5	0.80±0.05	7.5±0.6	1.2 ~ 2.7	21.5
SFV14D330K	20	18.5	5.3	16.5	0.80±0.05	7.5±0.6	1.3 ~ 2.9	21.5
SFV14D390K	20	18.5	5.6	16.5	0.80±0.05	7.5±0.6	1.4 ~ 3.1	21.5
SFV14D470K	20	18.5	4.8	16.5	0.80±0.05	7.5±0.6	1.2 ~ 2.7	21.5
SFV14D560K	20	18.5	5.0	16.5	0.80±0.05	7.5±0.6	1.3 ~ 2.9	21.5
SFV14D680K	20	18.5	5.3	16.5	0.80±0.05	7.5±0.6	1.5 ~ 3.2	21.5
SFV14D820K	20	18.5	4.4	16.5	0.80±0.05	7.5±0.6	1.2 ~ 2.6	21.5
SFV14D101K	20	18.5	4.6	16.5	0.80±0.05	7.5±0.6	1.3 ~ 2.8	21.5
SFV14D121K	20	18.5	4.8	16.5	0.80±0.05	7.5±0.6	1.4 ~ 3.0	21.5
SFV14D151K	20	18.5	5.1	16.5	0.80±0.05	7.5±0.6	1.6 ~ 3.3	21.5
SFV14D181K	20	18.5	4.3	16.5	0.80±0.05	7.5±0.6	1.0 ~ 2.6	21.5
SFV14D201K	20	18.5	4.4	16.5	0.80±0.05	7.5±0.6	1.1 ~ 2.7	21.5
SFV14D221K	20	18.5	4.5	16.5	0.80±0.05	7.5±0.6	1.2 ~ 2.8	21.5
SFV14D241K	20	18.5	4.6	16.5	0.80±0.05	7.5±0.6	1.3 ~ 2.9	21.5
SFV14D271K	20	18.5	4.8	16.5	0.80±0.05	7.5±0.6	1.4 ~ 3.1	21.5
SFV14D301K	20	18.5	4.9	16.5	0.80±0.05	7.5±0.6	1.5 ~ 3.2	21.5
SFV14D331K	20	18.5	5.1	16.5	0.80±0.05	7.5±0.6	1.6 ~ 3.3	21.5
SFV14D361K	20	18.5	5.2	16.5	0.80±0.05	7.5±0.6	1.7 ~ 3.5	21.5
SFV14D391K	20	18.5	5.4	16.5	0.80±0.05	7.5±0.6	1.8 ~ 3.6	21.5
SFV14D431K	20	18.5	5.6	16.5	0.80±0.05	7.5±0.6	1.8 ~ 3.8	21.5
SFV14D471K	20	18.5	5.8	16.5	0.80±0.05	7.5±0.6	2.0 ~ 4.0	21.5
SFV14D511K	20	18.5	6.0	16.5	0.80±0.05	7.5±0.6	2.2 ~ 4.2	21.5
SFV14D561K	20	18.5	6.2	16.5	0.80±0.05	7.5±0.6	2.4 ~ 4.4	21.5
SFV14D621K	20	18.5	6.1	16.5	0.80±0.05	7.5±0.6	2.7 ~ 4.7	21.5
SFV14D681K	20	18.5	6.8	16.5	0.80±0.05	7.5±0.6	3.0 ~ 5.0	21.5
SFV14D751K	20	18.5	7.2	16.5	0.80±0.05	7.5±0.6	3.3 ~ 5.3	21.5
SFV14D821K	20	18.5	7.6	16.5	0.80±0.05	7.5±0.6	3.6 ~ 5.6	21.5
SFV14D911K	20	18.5	8.0	16.5	0.80±0.05	7.5±0.6	4.0 ~ 6.0	21.5
SFV14D102K	20	18.5	8.4	16.5	0.80±0.05	7.5±0.6	4.5 ~ 6.5	21.5
SFV14D112K	20	18.5	8.9	16.5	0.80±0.05	7.5±0.6	4.9 ~ 6.9	21.5
SFV14D122K	20	18.5	9.4	16.5	0.80±0.05	7.5±0.6	5.4 ~ 7.4	21.5

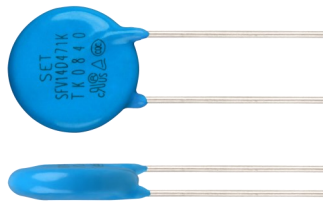

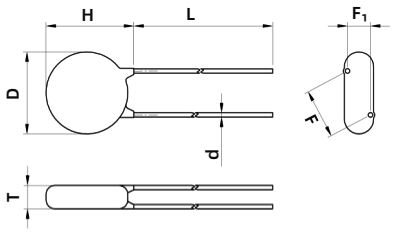

Straight Lead (A)

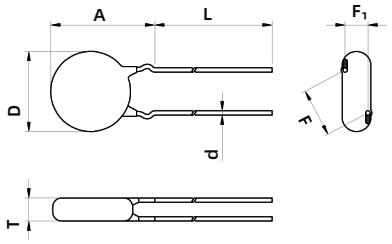

Outward Crimp (C)

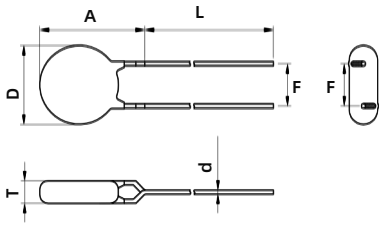

Inline Crimp (D)

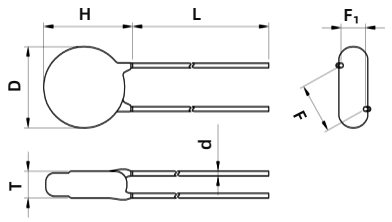

Little Straight Lead (I)

Note:
The above data is for reference only.

All Rights Reserved by Xiamen SET Electronics Co., Ltd. 2024-2026 V1.1

Specification

Model	Surge Level	Max. Continuous Operating Voltage		Varistor Voltage @1 mA DC		Clamping Voltage (Max.)		Max. Peak Current (1 time, 8/20 μs)	Max. Energy (10/1000 μs)	Typical Capacitance (For reference only) @1 kHz	Agency Information			
		VAC	VDC	Min.	Max.	V_C	I_P	S		(pF)	UL	cUL	TUV	CQC
		(V)	(V)	(V)	(V)	(V)	(A)	(kA)	(J)					
SFV14D220K	S	14	18	20	24	43	10	1.0	5.0	9100	●	●	●	●
SFV14D270K	S	17	22	24	31	53	10	1.0	6.0	7400	●	●	●	●
SFV14D330K	S	20	26	30	36	65	10	1.0	7.5	6100	●	●	●	●
SFV14D390K	S	25	31	35	43	77	10	1.0	8.6	5100	●	●	●	●
SFV14D470K	S	30	38	42	52	93	10	1.0	10	4300	●	●	●	●
SFV14D560K	S	35	45	50	62	110	10	1.0	11	3600	●	●	●	●
SFV14D680K	S	40	56	61	75	135	10	1.0	14	2900	●	●	●	●
SFV14D820K	S	50	65	74	90	135	50	4.5	22	2400	●	●	●	●
SFV14D101K	S	60	85	90	110	165	50	4.5	28	2000	●	●	●	●
SFV14D121K	S	75	100	108	132	200	50	4.5	32	1700	●	●	●	●
SFV14D151K	S	95	125	135	165	250	50	4.5	40	1300	●	●	●	●
SFV14D181K	S	115	150	162	198	300	50	4.5	50	1100	●	●	●	●
SFV14D201K	S	130	170	180	220	340	50	4.5	57	1000	●	●	●	●
SFV14D221K	S	140	180	198	242	360	50	4.5	60	900	●	●	●	●
SFV14D241K	S	150	200	216	264	395	50	4.5	63	830	●	●	●	●
SFV14D271K	S	175	225	243	297	455	50	4.5	70	740	●	●	●	●
SFV14D301K	S	190	250	270	330	500	50	4.5	77	670	●	●	●	●
SFV14D331K	S	210	275	297	363	550	50	4.5	85	610	●	●	●	●
SFV14D361K	S	230	300	324	396	595	50	4.5	93	560	●	●	●	●
SFV14D391K	S	250	320	351	429	650	50	4.5	100	510	●	●	●	●
SFV14D431K	S	275	350	387	473	710	50	4.5	115	460	●	●	●	●
SFV14D471K	S	300	385	423	517	775	50	4.5	125	430	●	●	●	●
SFV14D511K	S	320	415	459	561	845	50	4.5	125	390	●	●	●	●
SFV14D561K	S	350	460	504	616	925	50	4.5	125	360	●	●	●	●
SFV14D621K	S	385	505	558	682	1025	50	4.5	125	320	●	●	●	●
SFV14D681K	S	420	560	612	748	1120	50	4.5	130	290	●	●	●	●
SFV14D751K	S	460	615	675	825	1240	50	4.5	143	270	●	●	●	●
SFV14D821K	S	510	670	738	902	1355	50	4.5	157	240	●	●	●	●
SFV14D911K	S	550	745	819	1001	1500	50	4.5	175	220	●	●	○	●
SFV14D102K	S	625	825	900	1100	1650	50	4.5	190	200	●	●	○	●
SFV14D112K	S	680	895	990	1210	1815	50	4.5	213	180	●	●	○	●
SFV14D122K	S	750	990	1080	1320	1980	50	4.5	213	150	●	●	○	●

●: Approved ○: Unauthorized ● RoHS & REACH Compliant

All Rights Reserved by Xiamen SET Electronics Co., Ltd. 2024-2026 V1.1

Specification

Model	Surge Level	Max. Continuous Operating Voltage		Varistor Voltage @1 mA DC		Clamping Voltage (Max.)		Max. Peak Current (1 time, 8/20 μs)	Max. Energy (10/1000 μs)	Typical Capacitance (For reference only) @1 kHz	Agency Information			
		VAC	VDC	Min.	Max.	V_C	I_P	K		(pF)				
		(V)	(V)	(V)	(V)	(V)	(A)	(kA)	(J)		UL	cUL	TUV	CQC
SFV14D220K	K	14	18	20	24	43	10	2	6.3	9100	●	●	●	●
SFV14D270K	K	17	22	24	31	53	10	2	7.8	7400	●	●	●	●
SFV14D330K	K	20	26	30	36	65	10	2	9.5	6100	●	●	●	●
SFV14D390K	K	25	31	35	43	77	10	2	11	5100	●	●	●	●
SFV14D470K	K	30	38	42	52	93	10	2	14	4300	●	●	●	●
SFV14D560K	K	35	45	50	62	110	10	2	16	3600	●	●	●	●
SFV14D680K	K	40	56	61	75	135	10	2	20	2900	●	●	●	●
SFV14D820K	K	50	65	74	90	135	50	6	28	2400	●	●	●	●
SFV14D101K	K	60	85	90	110	165	50	6	35	2000	●	●	●	●
SFV14D121K	K	75	100	108	132	200	50	6	42	1700	●	●	●	●
SFV14D151K	K	95	125	135	165	250	50	6	53	1300	●	●	●	●
SFV14D181K	K	115	150	162	198	300	50	6	60	1100	●	●	●	●
SFV14D201K	K	130	170	180	220	340	50	6	70	1000	●	●	●	●
SFV14D221K	K	140	180	198	242	360	50	6	78	900	●	●	●	●
SFV14D241K	K	150	200	216	264	395	50	6	84	830	●	●	●	●
SFV14D271K	K	175	225	243	297	455	50	6	99	740	●	●	●	●
SFV14D301K	K	190	250	270	330	500	50	6	108	670	●	●	●	●
SFV14D331K	K	210	275	297	363	550	50	6	115	610	●	●	●	●
SFV14D361K	K	230	300	324	396	595	50	6	130	560	●	●	●	●
SFV14D391K	K	250	320	351	429	650	50	6	140	510	●	●	●	●
SFV14D431K	K	275	350	387	473	710	50	6	155	460	●	●	●	●
SFV14D471K	K	300	385	423	517	775	50	6	175	430	●	●	●	●
SFV14D511K	K	320	415	459	561	845	50	6	180	390	●	●	●	●
SFV14D561K	K	350	460	504	616	925	50	6	185	360	●	●	●	●
SFV14D621K	K	385	505	558	682	1025	50	6	190	320	●	●	●	●
SFV14D681K	K	420	560	612	748	1120	50	6	200	290	●	●	●	●
SFV14D751K	K	460	615	675	825	1240	50	6	210	270	●	●	●	●
SFV14D821K	K	510	670	738	902	1355	50	6	235	240	●	●	●	●
SFV14D911K	K	550	745	819	1001	1500	50	6	255	220	●	●	○	●
SFV14D102K	K	625	825	900	1100	1650	50	6	270	200	●	●	○	●
SFV14D112K	K	680	895	990	1210	1815	50	6	280	180	●	●	○	●
SFV14D122K	K	750	990	1080	1320	1980	50	6	310	150	●	●	○	●

●: Approved ○: Unauthorized ● RoHS & REACH Compliant

All Rights Reserved by Xiamen SET Electronics Co., Ltd. 2024-2026 V1.1

Specification

Model	Surge Level	Max. Continuous Operating Voltage		Varistor Voltage @1 mA DC		Clamping Voltage (Max.)		Max. Peak Current (1 time, 8/20 μs)	Max. Energy (8/20 μs)	Typical Capacitance (For reference only) @1 kHz	Agency Information			
		VAC	VDC	Min.	Max.	V_C	I_P	H		(pF)	UL	cUL	TUV	CQC
		(V)	(V)	(V)	(V)	(V)	(A)	(kA)	(J)					
SFV14D201K	H	130	170	180	220	340	50	8	150	1000	●	●	●	●
SFV14D221K	H	140	180	198	242	360	50	8	160	900	●	●	●	●
SFV14D241K	H	150	200	216	264	395	50	8	180	830	●	●	●	●
SFV14D271K	H	175	225	243	297	455	50	8	200	740	●	●	●	●
SFV14D301K	H	190	250	270	330	500	50	8	220	670	●	●	●	●
SFV14D331K	H	210	275	297	363	550	50	8	245	610	●	●	●	●
SFV14D361K	H	230	300	324	396	595	50	8	260	560	●	●	●	●
SFV14D391K	H	250	320	351	429	650	50	8	290	510	●	●	●	●
SFV14D431K	H	275	350	387	473	710	50	8	320	460	●	●	●	●
SFV14D471K	H	300	385	423	517	775	50	8	350	430	●	●	●	●
SFV14D511K	H	320	415	459	561	845	50	8	380	390	●	●	●	●
SFV14D561K	H	350	460	504	616	925	50	8	400	360	●	●	●	●
SFV14D621K	H	385	505	558	682	1025	50	8	400	320	●	●	●	●
SFV14D681K	H	420	560	612	748	1120	50	8	400	290	●	●	●	●

●: Approved ○: Unauthorized ● RoHS & REACH Compliant

All Rights Reserved by Xiamen SET Electronics Co., Ltd. 2024-2026 V1.1

Specification

Model	Surge Level	Max. Continuous Operating Voltage		Varistor Voltage @1 mA DC		Clamping Voltage (Max.)		Pulse Impact Performance (40 times) (1.2/50 μs & 8/20 μs)	Max. Energy (10/1000 μs)	Typical Capacitance (For reference only) @1 kHz	Agency Information			
		VAC	VDC	Min.	Max.	V_C	I_P	Q		(pF)	UL	cUL	TUV	CQC
		(V)	(V)	(V)	(V)	(V)	(A)	(kV)	(J)					
SFV14D201K	Q	130	170	180	220	340	50	6.6	70	1000	●	●	●	●
SFV14D221K	Q	14	180	198	242	360	50	6.6	78	900	●	●	●	●
SFV14D241K	Q	150	200	216	264	395	50	6.6	84	830	●	●	●	●
SFV14D271K	Q	175	225	243	297	455	50	6.6	99	740	●	●	●	●
SFV14D301K	Q	190	250	270	330	500	50	6.6	108	670	●	●	●	●
SFV14D331K	Q	210	275	297	363	550	50	6.6	115	610	●	●	●	●
SFV14D361K	Q	230	300	324	396	595	50	6.6	130	560	●	●	●	●
SFV14D391K	Q	250	320	351	429	650	50	6.6	140	510	●	●	●	●
SFV14D431K	Q	275	350	387	473	710	50	6.6	155	460	●	●	●	●
SFV14D471K	Q	300	385	423	517	775	50	6.6	175	430	●	●	●	●
SFV14D511K	Q	320	415	459	561	845	50	6.6	180	390	●	●	●	●
SFV14D561K	Q	350	460	504	616	925	50	6.6	185	360	●	●	●	●
SFV14D621K	Q	385	505	558	682	1025	50	6.6	190	320	●	●	●	●
SFV14D681K	Q	420	560	612	748	1120	50	6.6	200	290	●	●	●	●

●: Approved ○: Unauthorized ● RoHS & REACH Compliant

All Rights Reserved by Xiamen SET Electronics Co., Ltd. 2024-2026 V1.1

Performance Curve (For reference only)

- Max. Peak Current Derating Curves

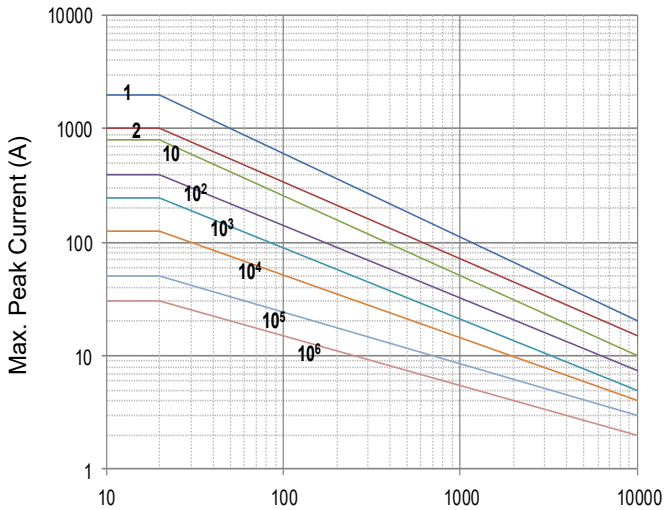

Impulse Duration (μs)
SFV14D220K to SFV14D680K

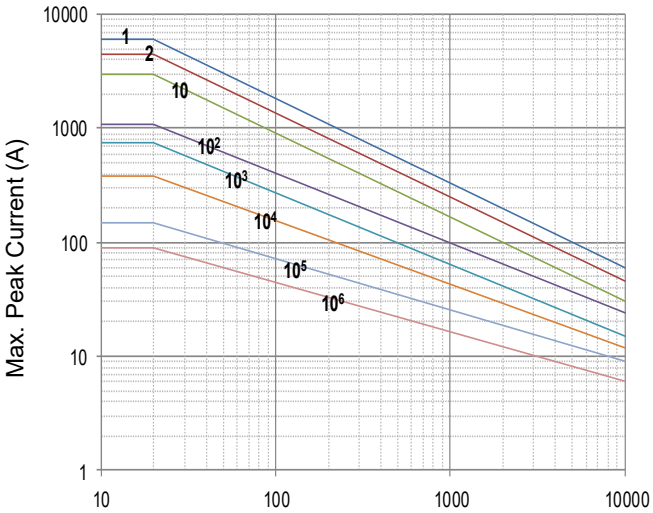

Impulse Duration (μs)
SFV14D820K to SFV14D122K

Note: 1, 2, 10, 10^2, 10^3, 10^4, 10^5, 10^6 Stand for Repetitions.

- Voltage-Current Characteristic Curves

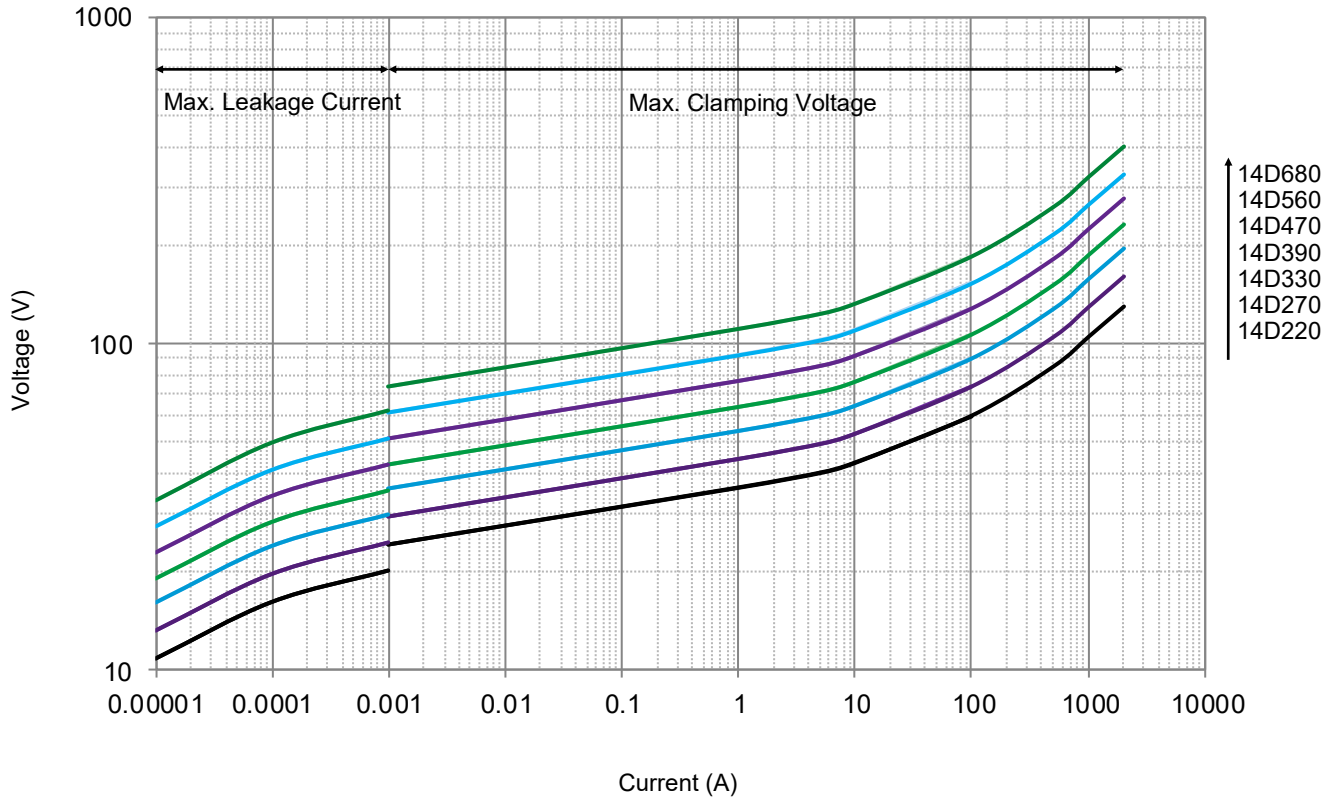

All Rights Reserved by Xiamen SET Electronics Co., Ltd. 2024-2026 V1.1

- Voltage-Current Characteristic Curves

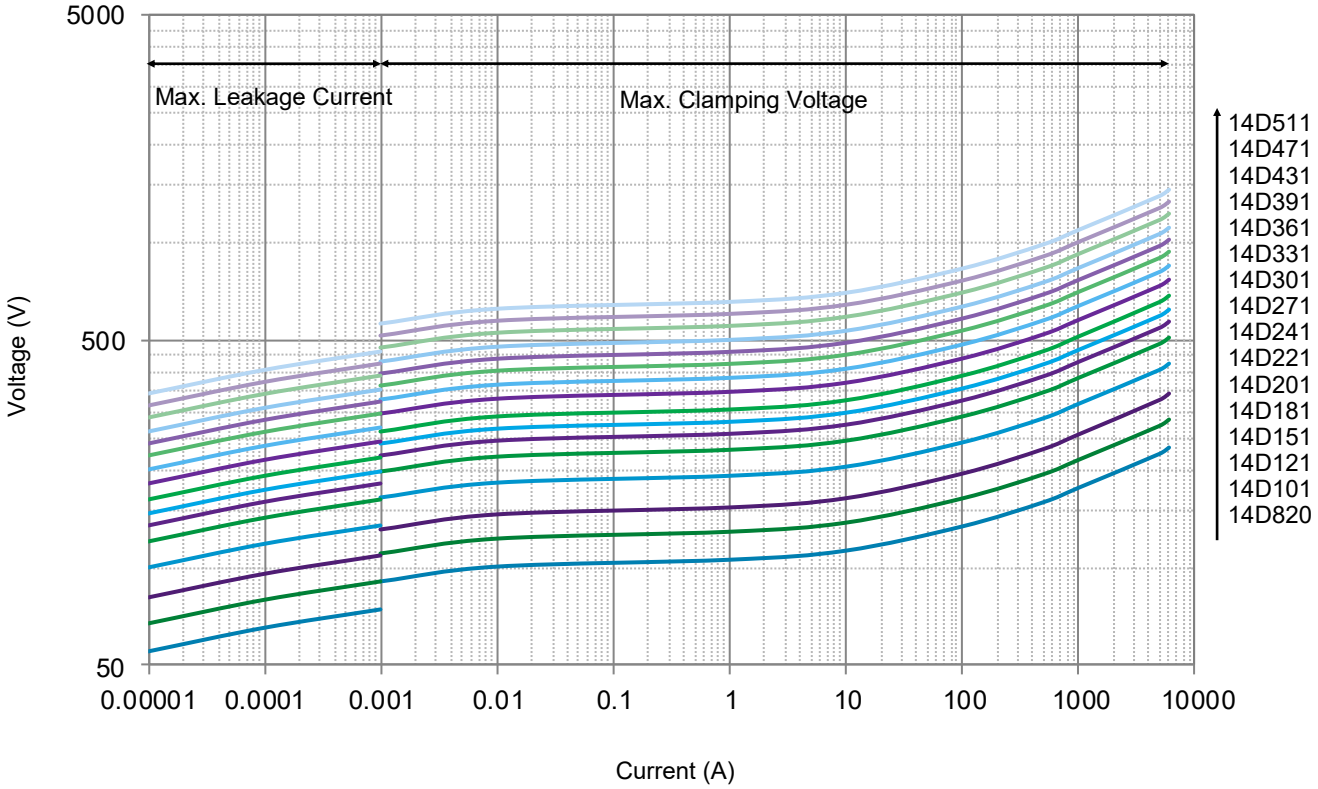

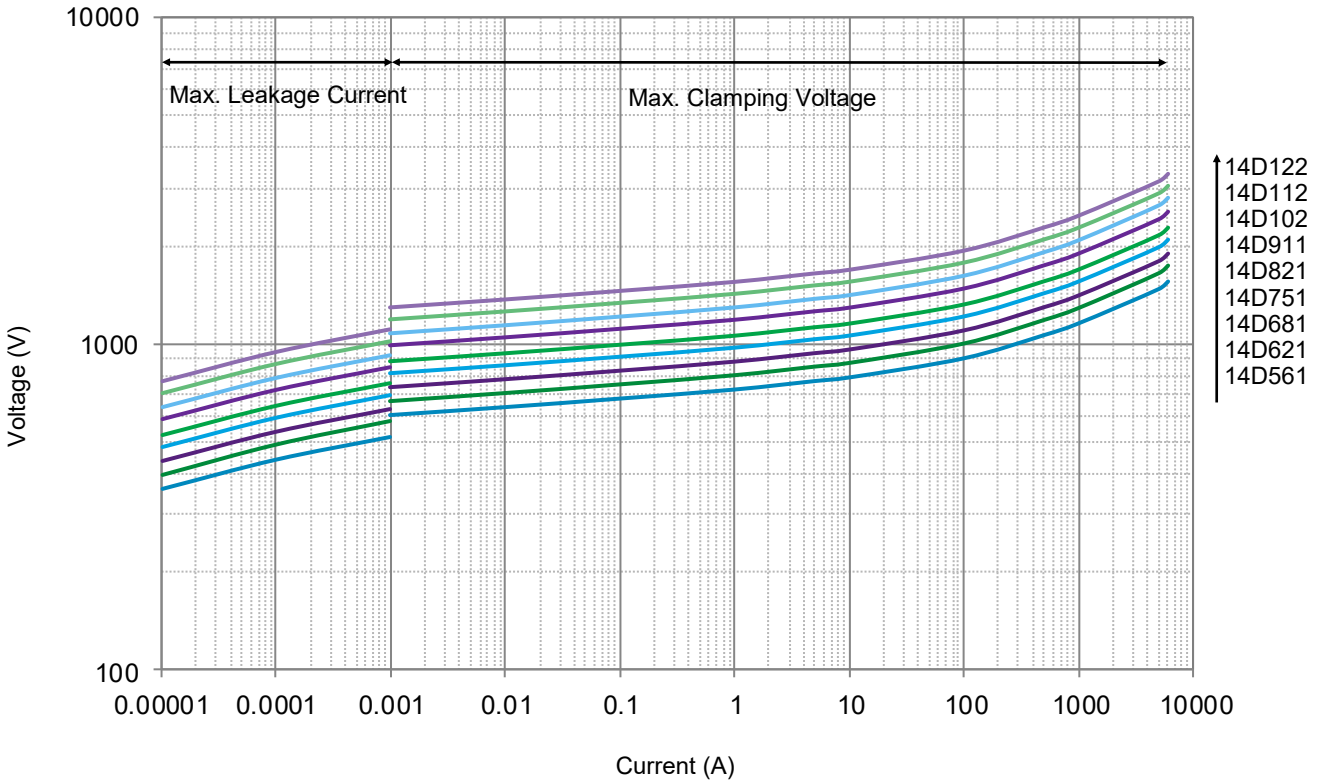

All Rights Reserved by Xiamen SET Electronics Co., Ltd. 2024-2026 V1.1

Packaging Information

- Bulk Packaging (Code: BUL)
- Bulk Packaging Quantity & Weight.

Series	Nominal Varistor Voltage	PE Bag	Box	Carton	G. W / Carton (365 × 265 × 245)
SFV14D Series	(V)	(PCS)	(PCS)	(PCS)	(kg)±10%
	220 ~ 361	500	1000	6000	8 ~ 15
	391 ~ 621	400	800	4800	13 ~ 18
	681 ~ 122	250	500	3000	12 ~ 20

Note:
Other lead length packaging information, please contact SETsafe | SETfuse.

All Dimensions in mm

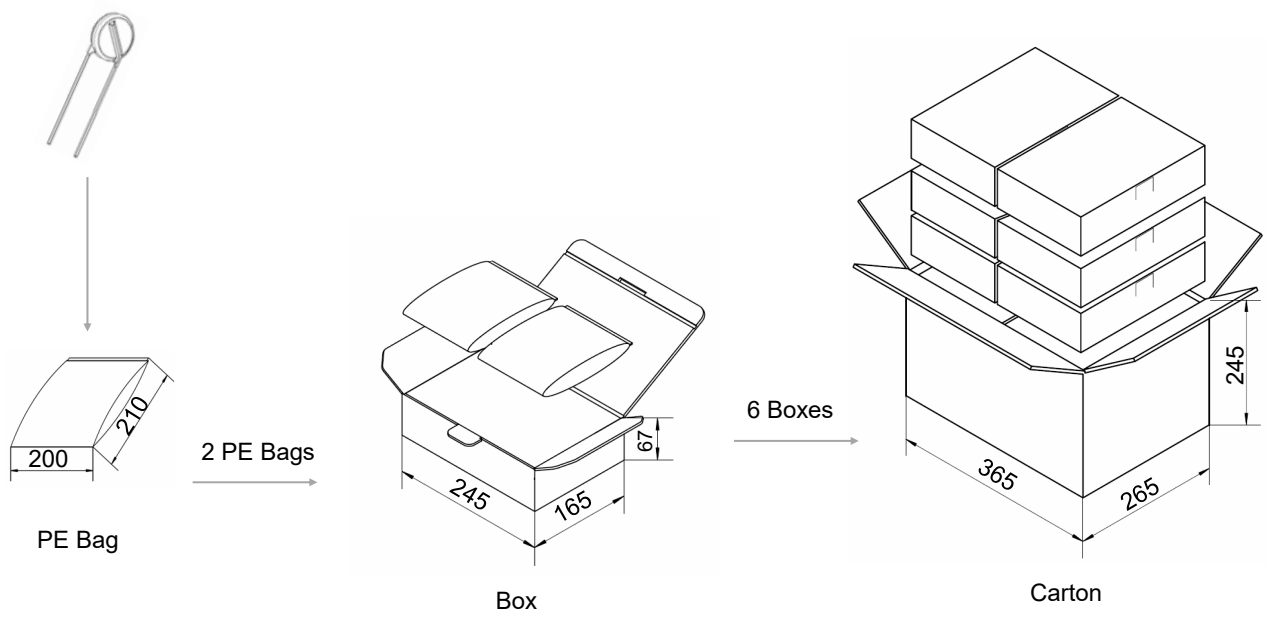

All Rights Reserved by Xiamen SET Electronics Co., Ltd. 2024-2026 V1.1

Packaging Information

- Tape Packaging (Code: 0AB)

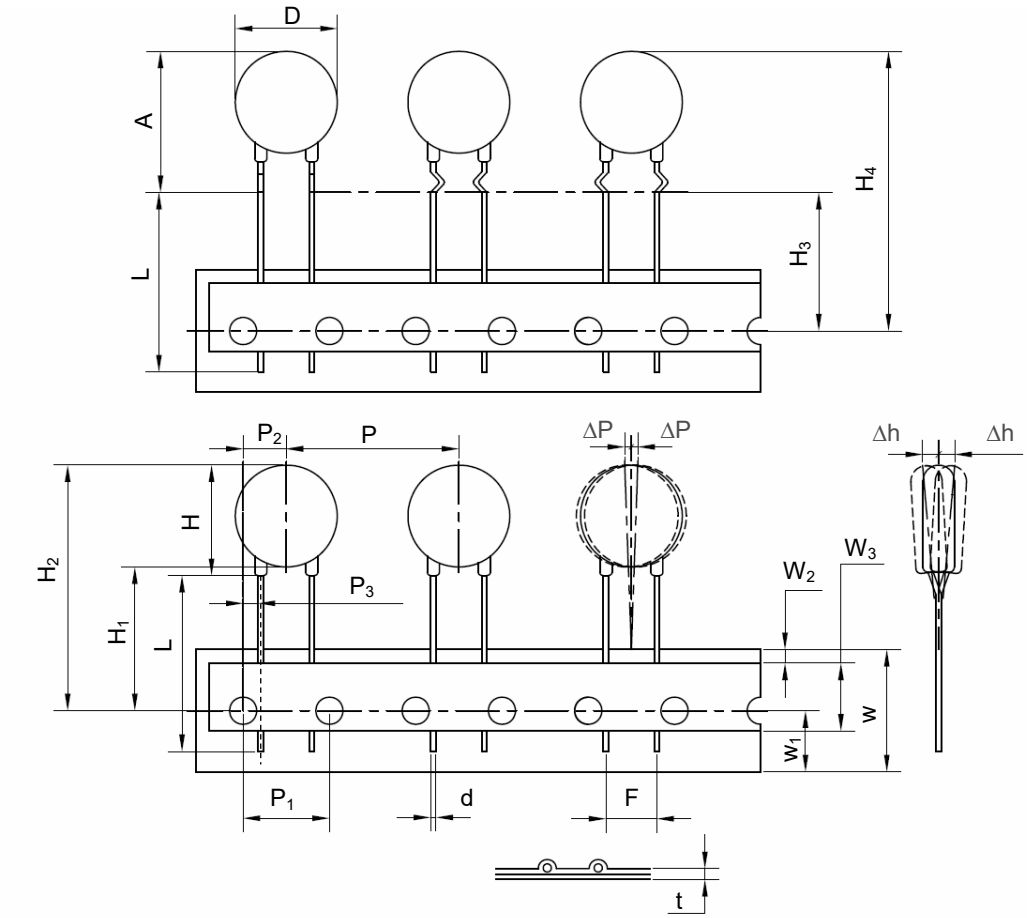

Dimensions (mm)	
P	25.4±1.0
P_1	12.7±0.3
P_2	6.35±1.3
P_3	2.6±0.7
ΔP(max.)	1.0
W	18.0±1.0
W_1	9.0±1.0
W_2(max.)	3.0
W_3	10.0±2.0
H(max.)	18.5
H_1	18.0
H_2(max.)	$40.0^{+2.0}_{-0}$
H_3	18.0
H_4(max.)	$42.0^{+2.0}_{-0}$
Δh(max.)	2.0
t (max.)	0.6
D(max.)	16.5
D_0	4.0±0.2
d	0.80±0.05
A(max.)	21.5
F	7.5±1.0
L(min.)	/

- Tape Packaging Quantity & Weight.

Series	Nominal Varistor Voltage	Box	Carton	G. W / Carton (365 × 265 × 415)
	(V)	(PCS)	(PCS)	(kg)±10%
14D	112 ~ 122	250	1750	10 ~ 12
	681 ~ 102	300	2100	9 ~ 12
	471 ~ 621	400	2800	9 ~ 11
	301 ~ 431	500	3500	8 ~ 10
	680			9
	390 ~ 560	600	4200	7 ~ 9
	820 ~ 271			6 ~ 9
	220 ~ 330	700	4900	6 ~ 8

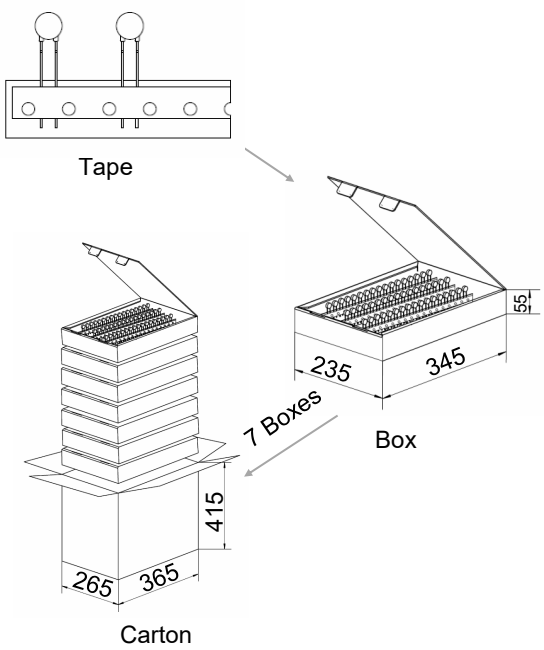

All Rights Reserved by Xiamen SET Electronics Co., Ltd. 2024-2026 V1.1

Packaging Information

- Tape Packaging (Code: 1AB)

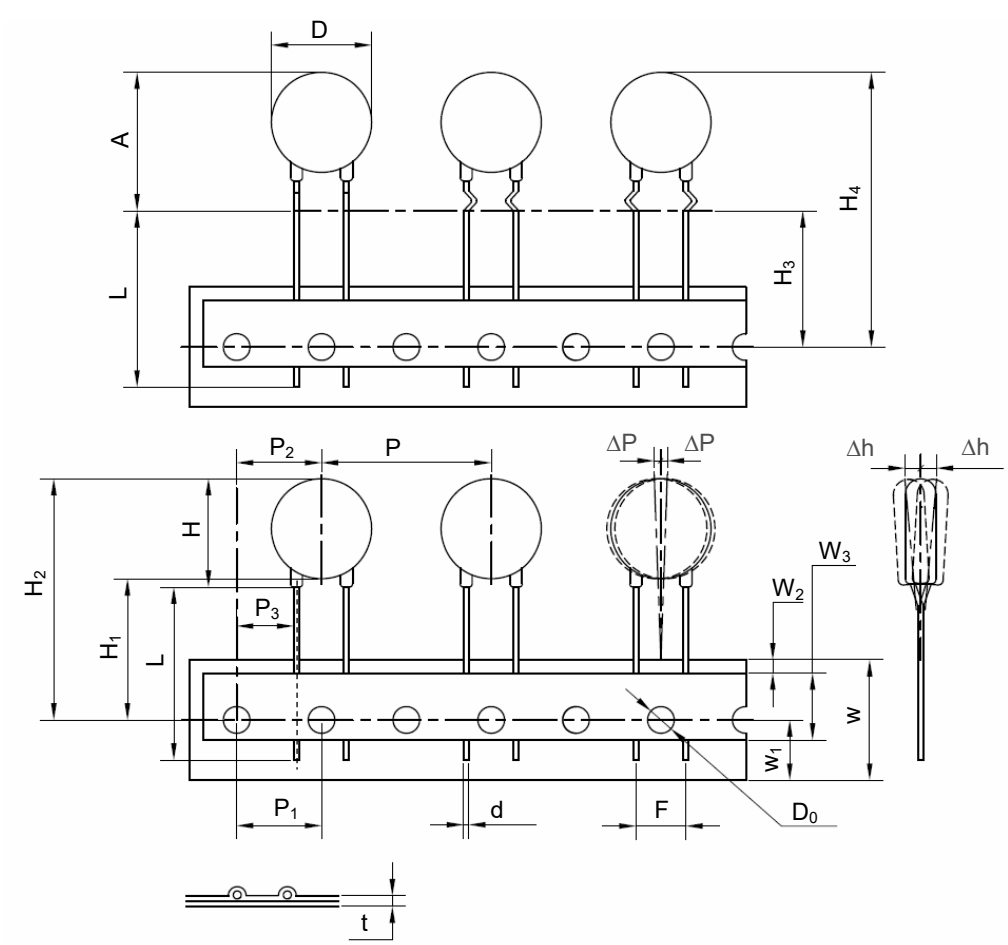

Dimensions (mm)	
P	25.4±1.0
P_1	12.7±0.3
P_2	12.7±1.3
P_3	8.95±0.7
ΔP(max.)	1.0
W	18.0±1.0
W_1	9.0±1.0
W_2(max.)	3.0
W_3	10.0±2.0
H(max.)	18.5
H_1	18.0
H_2(max.)	$40.0^{+2.0}_{-0}$
H_3	18.0
H_4(max.)	$42.0^{+2.0}_{-0}$
Δh(max.)	2.0
t (max.)	0.6
D(max.)	16.5
D_0	4.0±0.2
d	0.80±0.05
A(max.)	21.5
F	7.5±1.0
L(min.)	/

- Tape Packaging Quantity & Weight.

Series	Nominal Varistor Voltage	Box	Carton	G. W / Carton (365 × 265 × 415)
	(V)	(PCS)	(PCS)	(kg)±10%
14D	112 ~ 122	250	1750	10 ~ 12
	681 ~ 102	300	2100	9 ~ 12
	471 ~ 621	400	2800	9 ~ 11
	301 ~ 431	500	3500	8 ~ 10
	680			9
	390 ~ 560	600	4200	7 ~ 9
	820 ~ 271			6 ~ 9
	220 ~ 330	700	4900	6 ~ 8

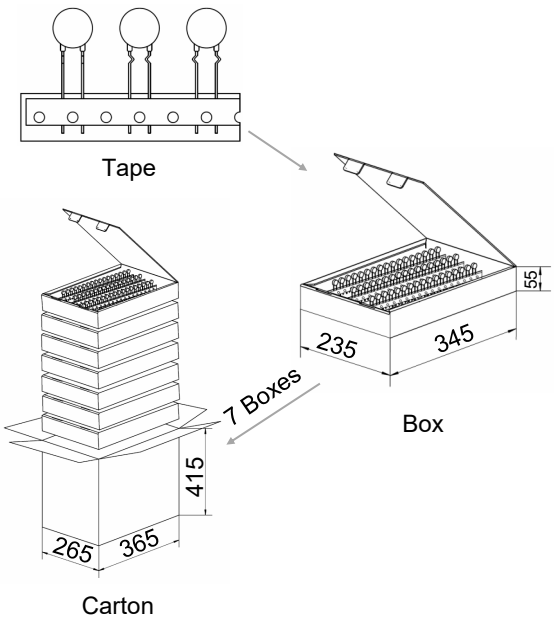

All Rights Reserved by Xiamen SET Electronics Co., Ltd. 2024-2026 V1.1

Packaging Information

- Tape Packaging (Code: 0EB)

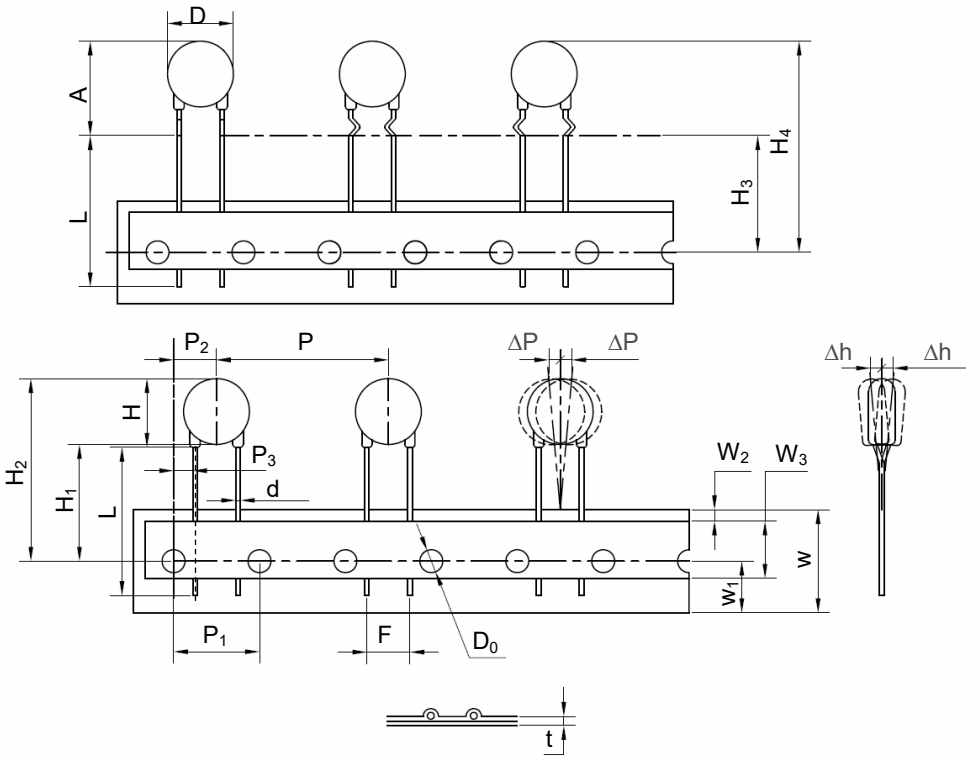

Dimensions (mm)	
P	30.0±1.0
P_1	15.0±0.3
P_2	7.5±1.3
P_3	3.75±1.0
ΔP(max.)	1.0
W	18.0±1.0
W_1	9.0±1.0
W_2(max.)	3.0
W_3	10.0±2.0
H(max.)	18.5
H_1	18.0
H_2(max.)	$40.0^{+2.0}_{-0}$
H_3	18.0
H_4(max.)	$42.0^{+2.0}_{-0}$
Δh(max.)	2.0
t (max.)	0.6
D(max.)	16.5
D_0	4.0±0.2
d	0.80±0.05
A(max.)	21.5
F	7.5±1.0
L(min.)	/

- Tape Packaging Quantity & Weight.

Series	Nominal Varistor Voltage	Box	Carton	G. W / Carton (365 × 265 × 415)
14D	(V)	(PCS)	(PCS)	(kg)±10%
	112 ~ 122	200	1400	8 ~ 9
	821 ~ 102	250	1750	8 ~ 9
	681 ~ 751	300	2100	8 ~ 9
	511 ~ 621	350	2450	8 ~ 9
	391 ~ 471	400	2800	7 ~ 9
	301 ~ 361	450	3150	7 ~ 9
	680			9
	241 ~ 271	500	3500	6 ~ 7
	151			7
	470 ~ 560			6 ~ 8
	181 ~ 221	550	3850	6 ~ 7
	101 ~ 121			
	330 ~ 390			
	820	600	4200	6
	220 ~ 270			5 ~ 6

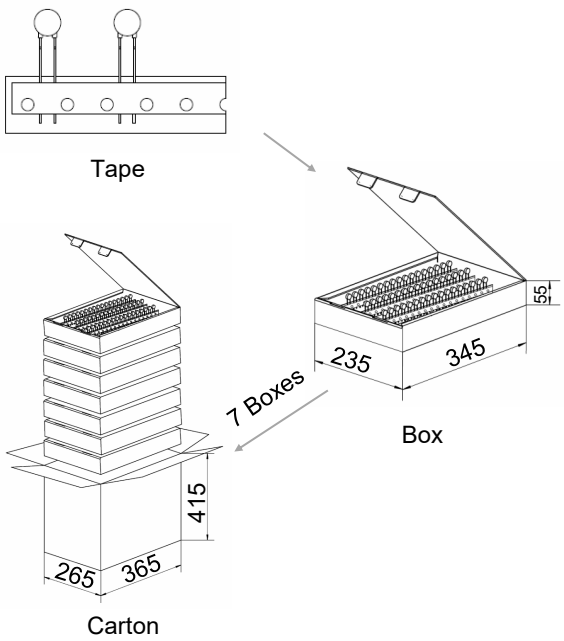

All Rights Reserved by Xiamen SET Electronics Co., Ltd. 2024-2026 V1.1

Packaging Information

- Tape Packaging (Code: 1EB)

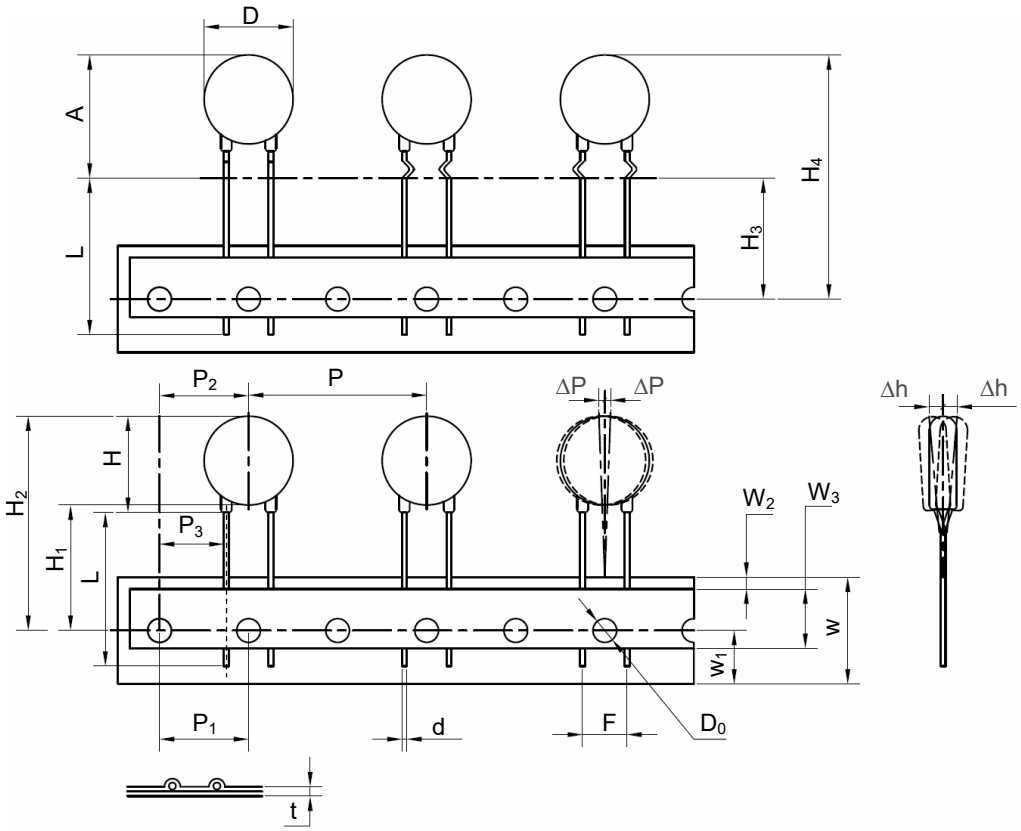

Dimensions (mm)	
P	30.0±1.0
P_1	15.0±0.3
P_2	15.0±1.3
P_3	11.25±1.0
ΔP(max.)	1.0
W	18.0±1.0
W_1	9.0±1.0
W_2(max.)	3.0
W_3	10.0±1.0
H(max.)	18.5
H_1	18.0
H_2(max.)	$40.0^{+2.0}_{-0}$
H_3	18.0
H_4(max.)	$42.0^{+2.0}_{-0}$
Δh(max.)	2.0
t (max.)	0.55
D(max.)	16.5
D_0	4.0±0.2
d	0.80±0.05
A(max.)	21.5
F	7.5±1.0
L(min.)	/

- Tape Packaging Quantity & Weight.

Series	Nominal Varistor Voltage	Box	Carton	G. W / Carton (365 × 265 × 415)
	(V)	(PCS)	(PCS)	(kg)±10%
14D	112 ~ 122	200	1400	8 ~ 9
	821 ~ 102	250	1750	8 ~ 9
	681 ~ 751	300	2100	8 ~ 9
	511 ~ 621	350	2450	8 ~ 9
	391 ~ 471	400	2800	7 ~ 9
	301 ~ 361	450	3150	7 ~ 9
	680			9
	241 ~ 271	500	3500	6 ~ 7
	151			7
	470 ~ 560			6 ~ 8
	181 ~ 221	550	3850	6 ~ 7
	101 ~ 121			
	330 ~ 390			
	820	600	4200	6
	220 ~ 270			5 ~ 6

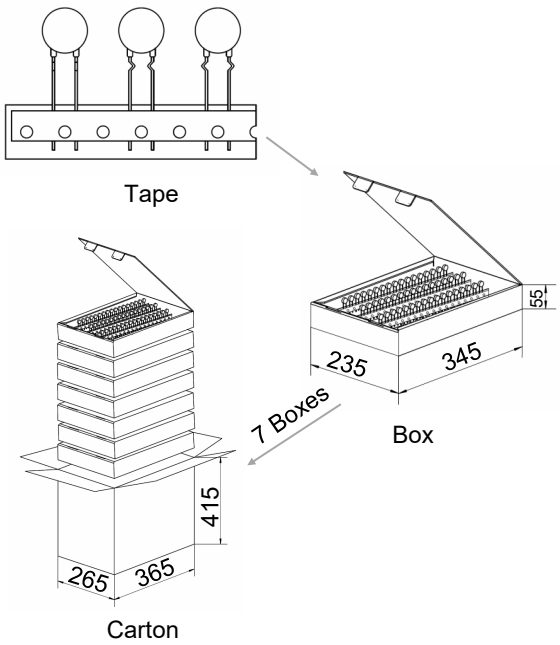

All Rights Reserved by Xiamen SET Electronics Co., Ltd. 2024-2026 V1.1

Packaging Information

- Reel Packaging (Code:1AR)

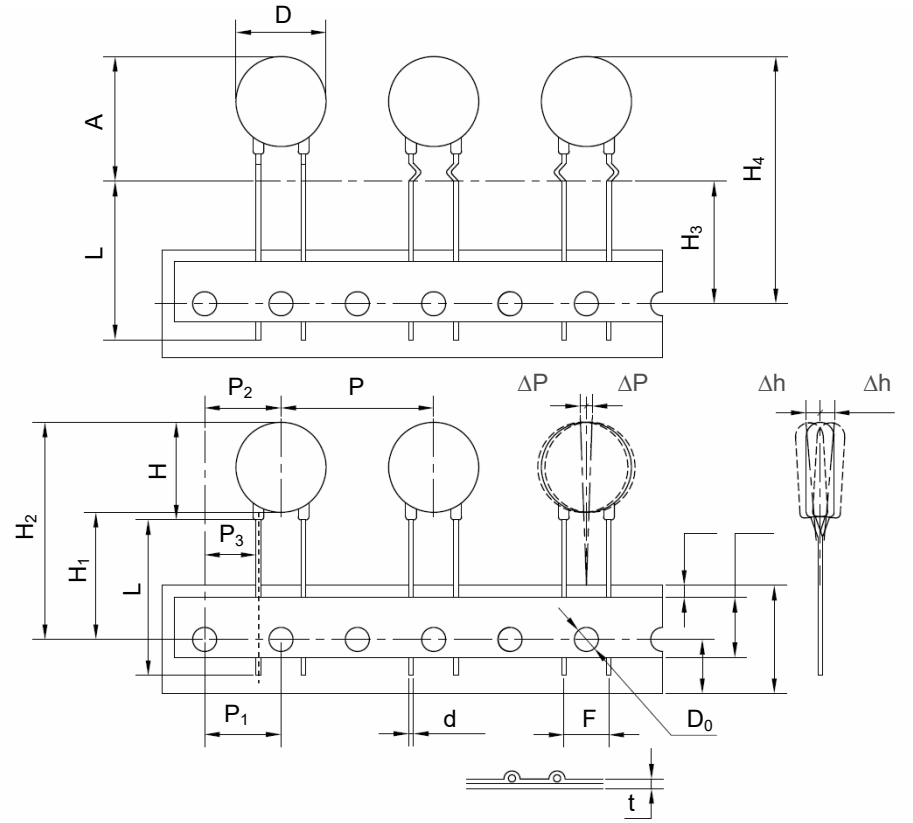

Dimensions (mm)	
P	25.4±1.0
P_1	12.7±0.3
P_2	12.7±1.3
P_3	8.95±0.7
ΔP(max.)	1.0
W	18.0±1.0
W_1	9.0±1.0
W_2(max.)	3.0
W_3	10.0±2.0
H(max.)	18.5
H_1	18.0
H_2(max.)	$40.0^{+2.0}_{-0}$
H_3	18.0
H_4(max.)	$42.0^{+2.0}_{-0}$
Δh(max.)	2.0
t (max.)	0.6
D(max.)	16.5
D_0	4.0±0.2
d	0.80±0.05
A(max.)	21.5
F	7.5±1.0
L(min.)	/

- Reel Packaging Quantity & Weight.

Series	Nominal Varistor Voltage	Box	Carton	G. W / Carton (375 × 335 × 385)
14D	(V)	(PCS)	(PCS)	(kg)±10%
	220 ~ 301	650	3250	4 ~ 8
	331 ~ 681	400	2000	4 ~ 8
	751 ~ 122	250	1250	5 ~ 8

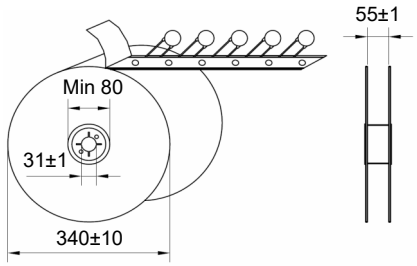

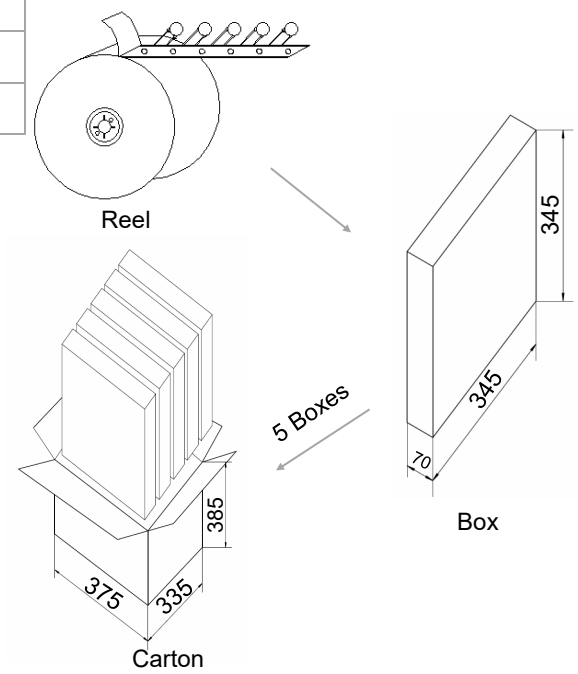

All Rights Reserved by Xiamen SET Electronics Co., Ltd. 2024-2026 V1.1

Dimensions (mm)

Model	L (Min.)	H (Max.)	T (Max.)	D (Max.)	d	F	F_1	A (Max.)
SFV20D220K	20	25.5	5.3	23	1.00±0.05	10.0±0.5	1.3 ~ 2.7	27.5
SFV20D270K	20	25.5	5.6	23	1.00±0.05	10.0±0.5	1.4 ~ 2.9	27.5
SFV20D330K	20	25.5	5.9	23	1.00±0.05	10.0±0.5	1.5 ~ 3.1	27.5
SFV20D390K	20	25.5	6.2	23	1.00±0.05	10.0±0.5	1.6 ~ 3.3	27.5
SFV20D470K	20	25.5	5.4	23	1.00±0.05	10.0±0.5	1.4 ~ 2.9	27.5
SFV20D560K	20	25.5	5.6	23	1.00±0.05	10.0±0.5	1.5 ~ 3.1	27.5
SFV20D680K	20	25.5	5.9	23	1.00±0.05	10.0±0.5	1.6 ~ 3.4	27.5
SFV20D820K	20	25.5	4.8	23	1.00±0.05	10.0±0.5	1.4 ~ 2.8	27.5
SFV20D101K	20	25.5	5.0	23	1.00±0.05	10.0±0.5	1.5 ~ 3.0	27.5
SFV20D121K	20	25.5	5.2	23	1.00±0.05	10.0±0.5	1.6 ~ 3.2	27.5
SFV20D151K	20	25.5	5.5	23	1.00±0.05	10.0±0.5	1.7 ~ 3.5	27.5
SFV20D181K	20	25.5	4.7	23	1.00±0.05	10.0±0.5	1.0 ~ 2.9	27.5
SFV20D201K	20	25.5	4.8	23	1.00±0.05	10.0±0.5	1.0 ~ 3.0	27.5
SFV20D221K	20	25.5	4.9	23	1.00±0.05	10.0±0.5	1.0 ~ 3.0	27.5
SFV20D241K	20	25.5	5.0	23	1.00±0.05	10.0±0.5	1.1 ~ 3.1	27.5
SFV20D271K	20	25.5	5.2	23	1.00±0.05	10.0±0.5	1.3 ~ 3.3	27.5
SFV20D301K	20	25.5	5.3	23	1.00±0.05	10.0±0.5	1.4 ~ 3.4	27.5
SFV20D331K	20	25.5	5.5	23	1.00±0.05	10.0±0.5	1.6 ~ 3.6	27.5
SFV20D361K	20	25.5	5.6	23	1.00±0.05	10.0±0.5	1.7 ~ 3.7	27.5
SFV20D391K	20	25.5	5.8	23	1.00±0.05	10.0±0.5	1.9 ~ 3.9	27.5
SFV20D431K	20	25.5	6.0	23	1.00±0.05	10.0±0.5	2.0 ~ 4.0	27.5
SFV20D471K	20	25.5	6.2	23	1.00±0.05	10.0±0.5	2.2 ~ 4.2	27.5
SFV20D511K	20	25.5	6.4	23	1.00±0.05	10.0±0.5	2.4 ~ 4.4	27.5
SFV20D561K	20	25.5	6.6	23	1.00±0.05	10.0±0.5	2.7 ~ 4.7	27.5
SFV20D621K	20	25.5	6.9	23	1.00±0.05	10.0±0.5	3.0 ~ 5.0	27.5
SFV20D681K	20	25.5	7.2	23	1.00±0.05	10.0±0.5	3.2 ~ 5.2	27.5
SFV20D751K	20	25.5	7.6	23	1.00±0.05	10.0±0.5	3.6 ~ 5.6	27.5
SFV20D821K	20	25.5	7.9	23	1.00±0.05	10.0±0.5	3.9 ~ 5.9	27.5
SFV20D911K	20	25.5	8.4	23	1.00±0.05	10.0±0.5	4.3 ~ 6.3	27.5
SFV20D102K	20	25.5	8.8	23	1.00±0.05	10.0±0.5	4.8 ~ 6.8	27.5
SFV20D112K	20	25.5	9.3	23	1.00±0.05	10.0±0.5	5.2 ~ 7.2	27.5
SFV20D122K	20	25.5	9.8	23	1.00±0.05	10.0±0.5	5.7 ~ 7.7	27.5

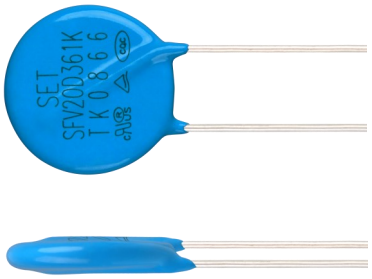

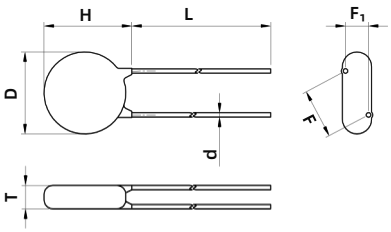

Straight Lead (A)

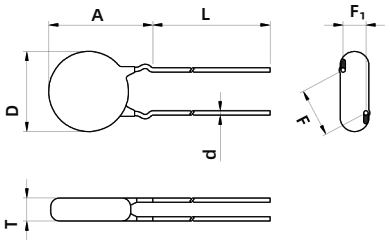

Outward Crimp (C)

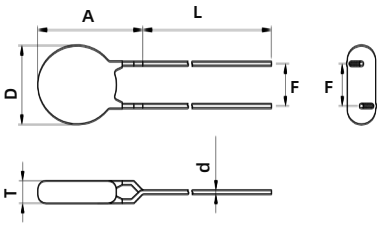

Inline Crimp (D)

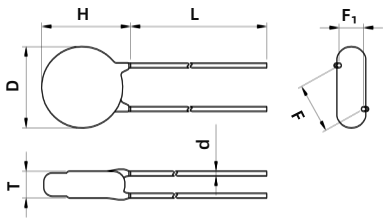

Little Straight Lead (I)

Note:
The above data is for reference only.

All Rights Reserved by Xiamen SET Electronics Co., Ltd. 2024-2026 V1.1

Specification

Model	Surge Level	Max. Continuous Operating Voltage		Varistor Voltage @1 mA DC		Clamping Voltage (Max.)		Max. Peak Current (1 time, 8/20 μs)	Max. Energy (10/1000 μs)	Typical Capacitance (For reference only) @1 kHz	Agency Information			
		VAC	VDC	Min.	Max.	V_C	I_P	S		(pF)	UL	cUL	TUV	CQC
		(V)	(V)	(V)	(V)	(V)	(A)	(kA)	(J)					
SFV20D220K	S	14	18	20	24	43	20	2.0	14	18500	●	●	●	●
SFV20D270K	S	17	22	24	31	53	20	2.0	16	13000	●	●	●	●
SFV20D330K	S	20	26	30	36	65	20	2.0	23	11500	●	●	●	●
SFV20D390K	S	25	31	35	43	77	20	2.0	26	8500	●	●	●	●
SFV20D470K	S	30	38	42	52	93	20	2.0	30	8000	●	●	●	●
SFV20D560K	S	35	45	50	62	110	20	2.0	41	7000	●	●	●	●
SFV20D680K	S	40	56	61	75	135	20	2.0	46	6200	●	●	●	●
SFV20D820K	S	50	65	74	90	135	100	6.5	38	4900	●	●	●	●
SFV20D101K	S	60	85	90	110	165	100	6.5	45	4000	●	●	●	●
SFV20D121K	S	75	100	108	132	200	100	6.5	55	3400	●	●	●	●
SFV20D151K	S	95	125	135	165	250	100	6.5	70	2700	●	●	●	●
SFV20D181K	S	115	150	162	198	300	100	6.5	85	2200	●	●	●	●
SFV20D201K	S	130	170	180	220	340	100	6.5	95	2000	●	●	●	●
SFV20D221K	S	140	180	198	242	360	100	6.5	100	1800	●	●	●	●
SFV20D241K	S	150	200	216	264	395	100	6.5	108	1650	●	●	●	●
SFV20D271K	S	175	225	243	297	455	100	6.5	127	1500	●	●	●	●
SFV20D301K	S	190	250	270	330	500	100	6.5	136	1300	●	●	●	●
SFV20D331K	S	210	275	297	363	550	100	6.5	150	1200	●	●	●	●
SFV20D361K	S	230	300	324	396	595	100	6.5	163	1100	●	●	●	●
SFV20D391K	S	250	320	351	429	650	100	6.5	180	1000	●	●	●	●
SFV20D431K	S	275	350	387	473	710	100	6.5	190	930	●	●	●	●
SFV20D471K	S	300	385	423	517	775	100	6.5	220	850	●	●	●	●
SFV20D511K	S	320	415	459	561	845	100	6.5	220	780	●	●	●	●
SFV20D561K	S	350	460	504	616	925	100	6.5	220	710	●	●	●	●
SFV20D621K	S	385	505	558	682	1025	100	6.5	220	650	●	●	●	●
SFV20D681K	S	420	560	612	748	1120	100	6.5	230	600	●	●	●	●
SFV20D751K	S	460	615	675	825	1240	100	6.5	255	530	●	●	●	●
SFV20D821K	S	510	670	738	902	1355	100	6.5	282	500	●	●	●	●
SFV20D911K	S	550	745	819	1001	1500	100	6.5	310	440	●	●	●	●
SFV20D102K	S	625	825	900	1100	1650	100	6.5	342	400	●	●	●	●
SFV20D112K	S	680	895	990	1210	1815	100	6.5	383	360	●	●	●	●
SFV20D122K	S	750	990	1080	1320	1980	100	6.5	408	320	●	●	●	●

●: Approved ○: Unauthorized ● RoHS & REACH Compliant

All Rights Reserved by Xiamen SET Electronics Co., Ltd. 2024-2026 V1.1

Specification

Model	Surge Level	Max. Continuous Operating Voltage		Varistor Voltage @1 mA DC		Clamping Voltage (Max.)		Max. Peak Current (1 time, 8/20 μs)	Max. Energy (10/1000 μs)	Typical Capacitance (For reference only) @1 kHz	Agency Information			
		VAC	VDC	Min.	Max.	V_C	I_P	K		(pF)	UL	cUL	TUV	CQC
		(V)	(V)	(V)	(V)	(V)	(A)	(kA)	(J)					
SFV20D220K	K	14	18	20	24	43	20	3	16	18500	●	●	●	●
SFV20D270K	K	17	22	24	31	53	20	3	19	13000	●	●	●	●
SFV20D330K	K	20	26	30	36	65	20	3	24	11500	●	●	●	●
SFV20D390K	K	25	31	35	43	77	20	3	28	8500	●	●	●	●
SFV20D470K	K	30	38	42	52	93	20	3	34	8000	●	●	●	●
SFV20D560K	K	35	45	50	62	110	20	3	41	7000	●	●	●	●
SFV20D680K	K	40	56	61	75	135	20	3	49	6200	●	●	●	●
SFV20D820K	K	50	65	74	90	135	100	10	56	4900	●	●	●	●
SFV20D101K	K	60	85	90	110	165	100	10	70	4000	●	●	●	●
SFV20D121K	K	75	100	108	132	200	100	10	85	3400	●	●	●	●
SFV20D151K	K	95	125	135	165	250	100	10	106	2700	●	●	●	●
SFV20D181K	K	115	150	162	198	300	100	10	130	2200	●	●	●	●
SFV20D201K	K	130	170	180	220	340	100	10	140	2000	●	●	●	●
SFV20D221K	K	140	180	198	242	360	100	10	155	1800	●	●	●	●
SFV20D241K	K	150	200	216	264	395	100	10	168	1650	●	●	●	●
SFV20D271K	K	175	225	243	297	455	100	10	190	1500	●	●	●	●
SFV20D301K	K	190	250	270	330	500	100	10	210	1300	●	●	●	●
SFV20D331K	K	210	275	297	363	550	100	10	228	1200	●	●	●	●
SFV20D361K	K	230	300	324	396	595	100	10	255	1100	●	●	●	●
SFV20D391K	K	250	320	351	429	650	100	10	275	1000	●	●	●	●
SFV20D431K	K	275	350	387	473	710	100	10	305	930	●	●	●	●
SFV20D471K	K	300	385	423	517	775	100	10	350	850	●	●	●	●
SFV20D511K	K	320	415	459	561	845	100	10	360	780	●	●	●	●
SFV20D561K	K	350	460	504	616	925	100	10	380	710	●	●	●	●
SFV20D621K	K	385	505	558	682	1025	100	10	390	650	●	●	●	●
SFV20D681K	K	420	560	612	748	1120	100	10	400	600	●	●	●	●
SFV20D751K	K	460	615	675	825	1240	100	10	420	530	●	●	●	●
SFV20D821K	K	510	670	738	902	1355	100	10	460	500	●	●	●	●
SFV20D911K	K	550	745	819	1001	1500	100	10	510	440	●	●	●	●
SFV20D102K	K	625	825	900	1100	1650	100	10	565	400	●	●	●	●
SFV20D112K	K	680	895	990	1210	1815	100	10	620	360	●	●	●	●
SFV20D122K	K	750	990	1080	1320	1980	100	10	660	320	●	●	●	●

●: Approved ○: Unauthorized ● RoHS & REACH Compliant

All Rights Reserved by Xiamen SET Electronics Co., Ltd. 2024-2026 V1.1

Specification

Model	Surge Level	Max. Continuous Operating Voltage		Varistor Voltage @1 mA DC		Clamping Voltage (Max.)		Max. Peak Current (1 time, 8/20 μs)	Max. Energy (8/20 μs)	Typical Capacitance (For reference only) @1 kHz	Agency Information			
		VAC	VDC	Min.	Max.	V_C	I_P	H		(pF)				
		(V)	(V)	(V)	(V)	(V)	(A)	(kA)	(J)		UL	cUL	TUV	CQC
SFV20D201K	H	130	170	180	220	340	100	13	300	2000	●	●	●	●
SFV20D221K	H	140	180	198	242	360	100	13	320	1800	●	●	●	●
SFV20D241K	H	150	200	216	264	395	100	13	340	1650	●	●	●	●
SFV20D271K	H	175	225	243	297	455	100	13	380	1500	●	●	●	●
SFV20D301K	H	190	250	270	330	500	100	13	400	1300	●	●	●	●
SFV20D331K	H	210	275	297	363	550	100	13	440	1200	●	●	●	●
SFV20D361K	H	230	300	324	396	595	100	13	470	1100	●	●	●	●
SFV20D391K	H	250	320	351	429	650	100	13	510	1000	●	●	●	●
SFV20D431K	H	275	350	387	473	710	100	13	550	930	●	●	●	●
SFV20D471K	H	300	385	423	517	775	100	13	600	850	●	●	●	●
SFV20D511K	H	320	415	459	561	845	100	13	650	780	●	●	●	●
SFV20D561K	H	350	460	504	616	925	100	13	700	710	●	●	●	●
SFV20D621K	H	385	505	558	682	1025	100	13	700	650	●	●	●	●
SFV20D681K	H	420	560	612	748	1120	100	13	800	600	●	●	●	●

●: Approved ○: Unauthorized ● RoHS & REACH Compliant

All Rights Reserved by Xiamen SET Electronics Co., Ltd. 2024-2026 V1.1

Specification

Model	Surge Level	Max. Continuous Operating Voltage		Varistor Voltage @1 mA DC		Clamping Voltage (Max.)		Pulse Impact Performance (40 times) (1.2/50 μs & 8/20 μs)		Max. Energy (10/1000 μs)	Typical Capacitance (For reference only) @1 kHz	Agency Information			
		VAC	VDC	Min.	Max.	V_C	I_P	Q			(pF)				
		(V)	(V)	(V)	(V)	(V)	(A)	(kV)	(J)			UL	cUL	TUV	CQC
SFV20D201K	Q	130	170	180	220	340	100	10	140		2000	●	●	●	●
SFV20D221K	Q	140	180	198	242	360	100	10	155		1800	●	●	●	●
SFV20D241K	Q	150	200	216	264	395	100	10	168		1650	●	●	●	●
SFV20D271K	Q	175	225	243	297	455	100	10	190		1500	●	●	●	●
SFV20D301K	Q	190	250	270	330	500	100	10	210		1300	●	●	●	●
SFV20D331K	Q	210	275	297	363	550	100	10	228		1200	●	●	●	●
SFV20D361K	Q	230	300	324	396	595	100	10	255		1100	●	●	●	●
SFV20D391K	Q	250	320	351	429	650	100	10	275		1000	●	●	●	●
SFV20D431K	Q	275	350	387	473	710	100	10	305		930	●	●	●	●
SFV20D471K	Q	300	385	423	517	775	100	10	350		850	●	●	●	●
SFV20D511K	Q	320	415	459	561	845	100	10	360		780	●	●	●	●
SFV20D561K	Q	350	460	504	616	925	100	10	380		710	●	●	●	●
SFV20D621K	Q	385	505	558	682	1025	100	10	390		650	●	●	●	●
SFV20D681K	Q	420	560	612	748	1120	100	10	400		600	●	●	●	●

●: Approved ○: Unauthorized ● RoHS & REACH Compliant

All Rights Reserved by Xiamen SET Electronics Co., Ltd. 2024-2026 V1.1

- Voltage-Current Characteristic Curves

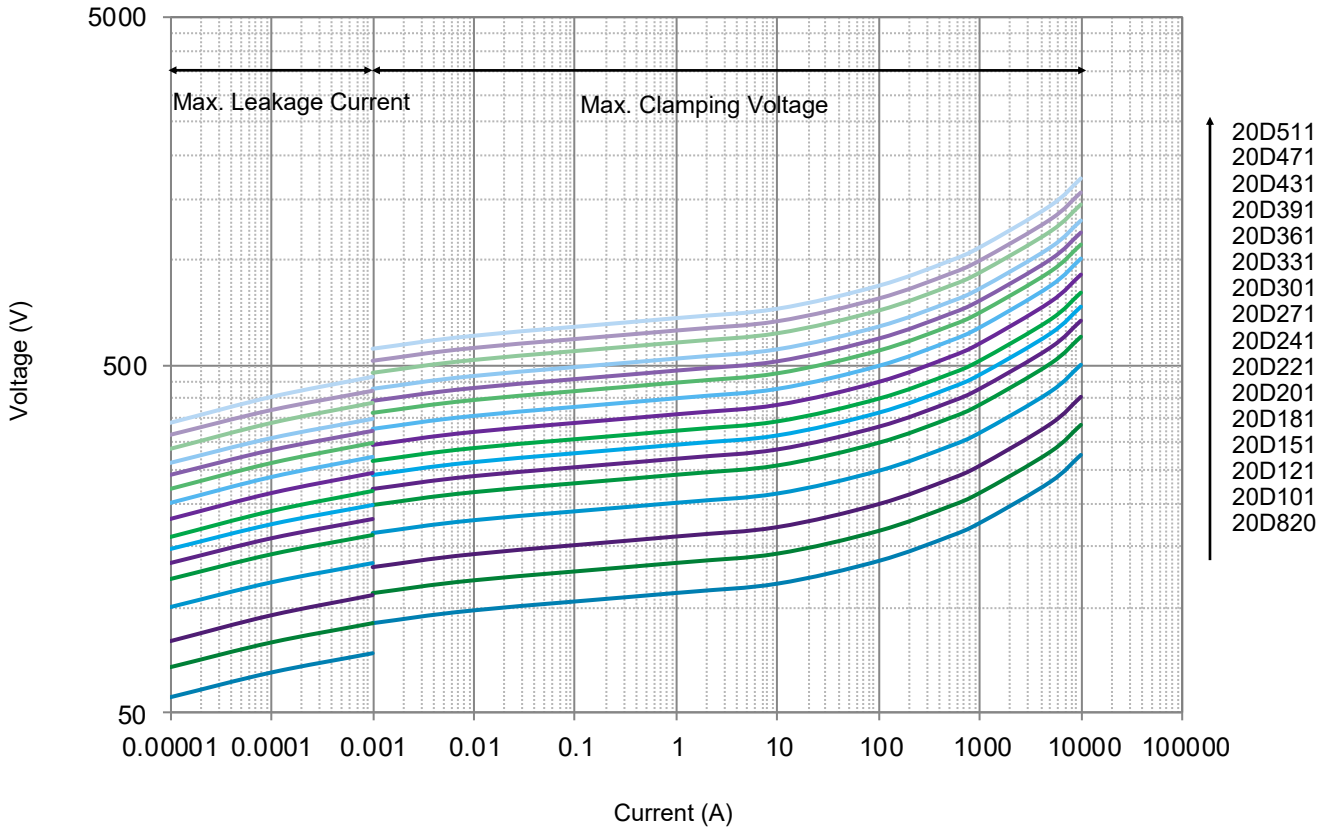

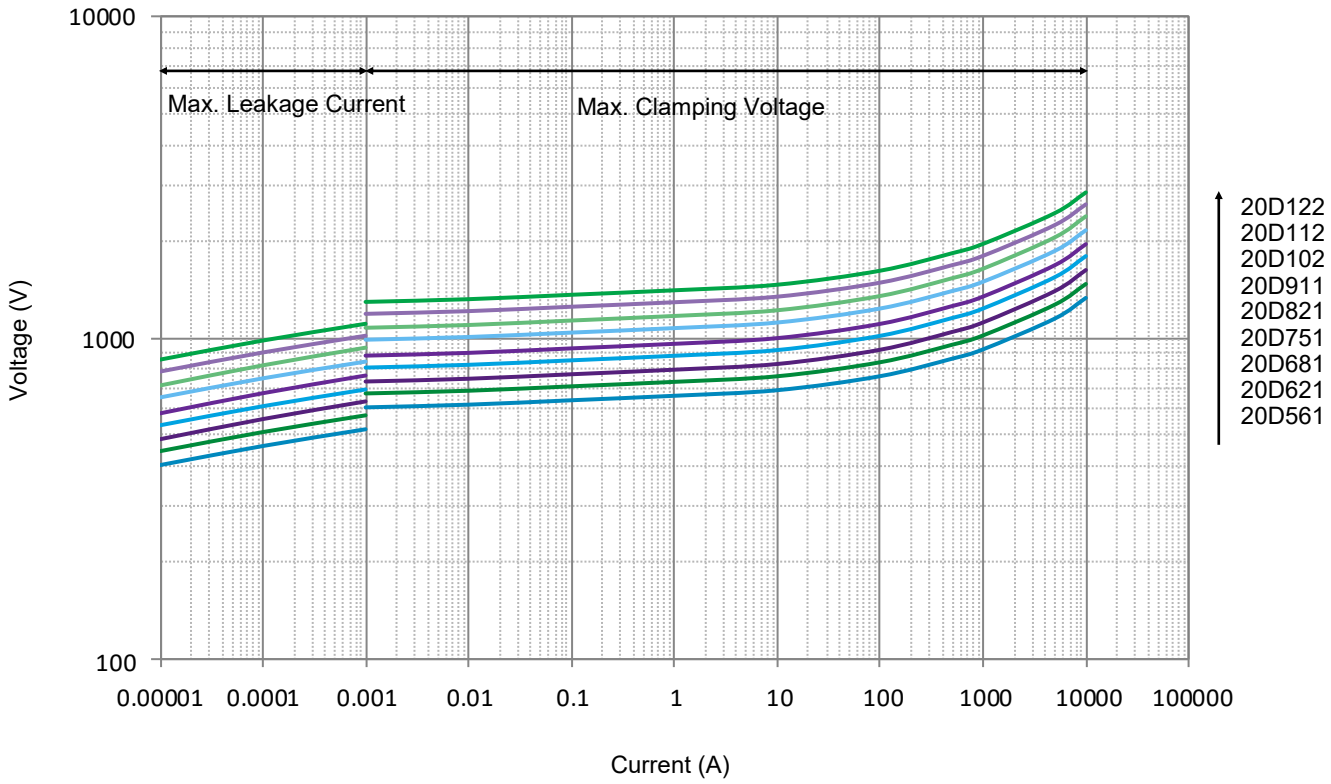

All Rights Reserved by Xiamen SET Electronics Co., Ltd. 2024-2026 V1.1

- 伏安特性曲线

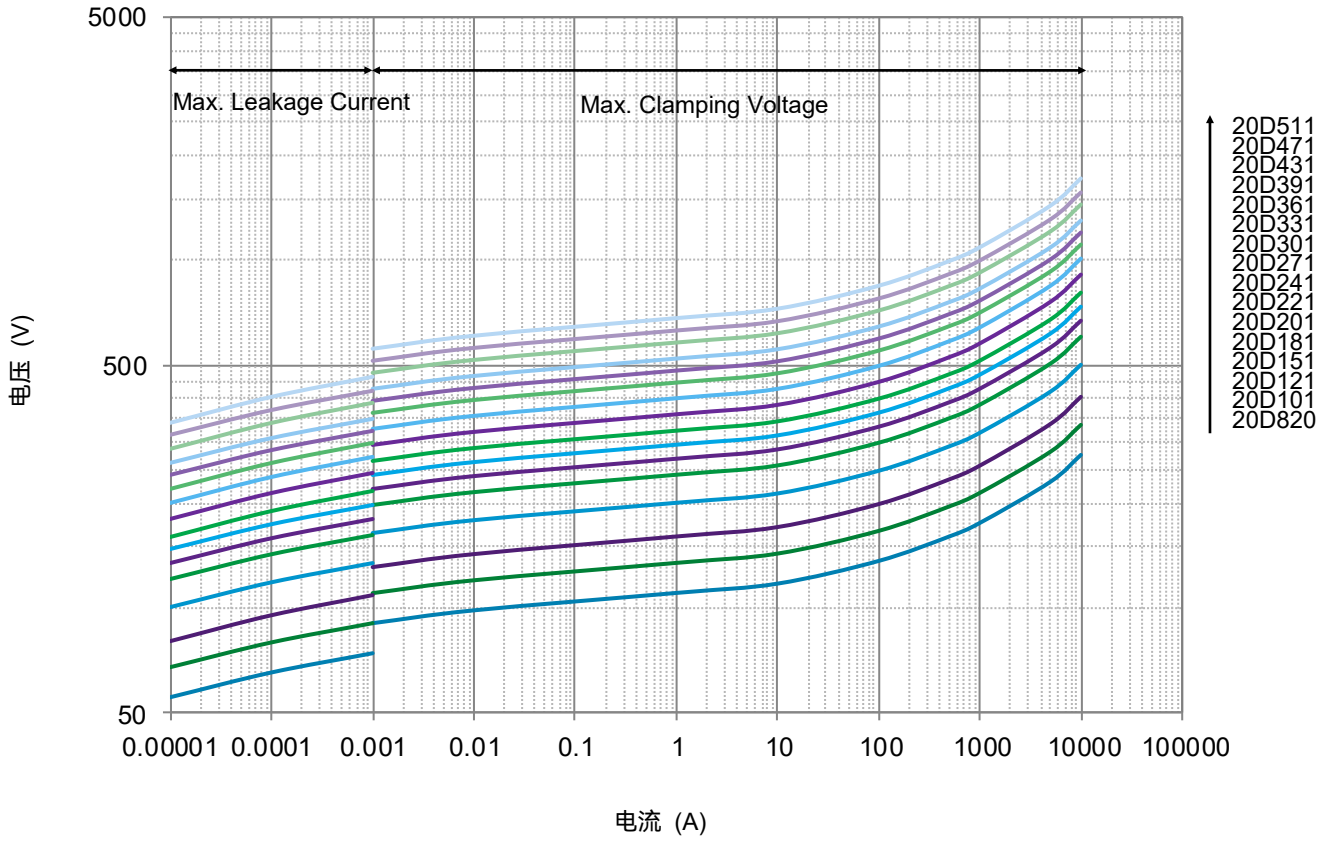

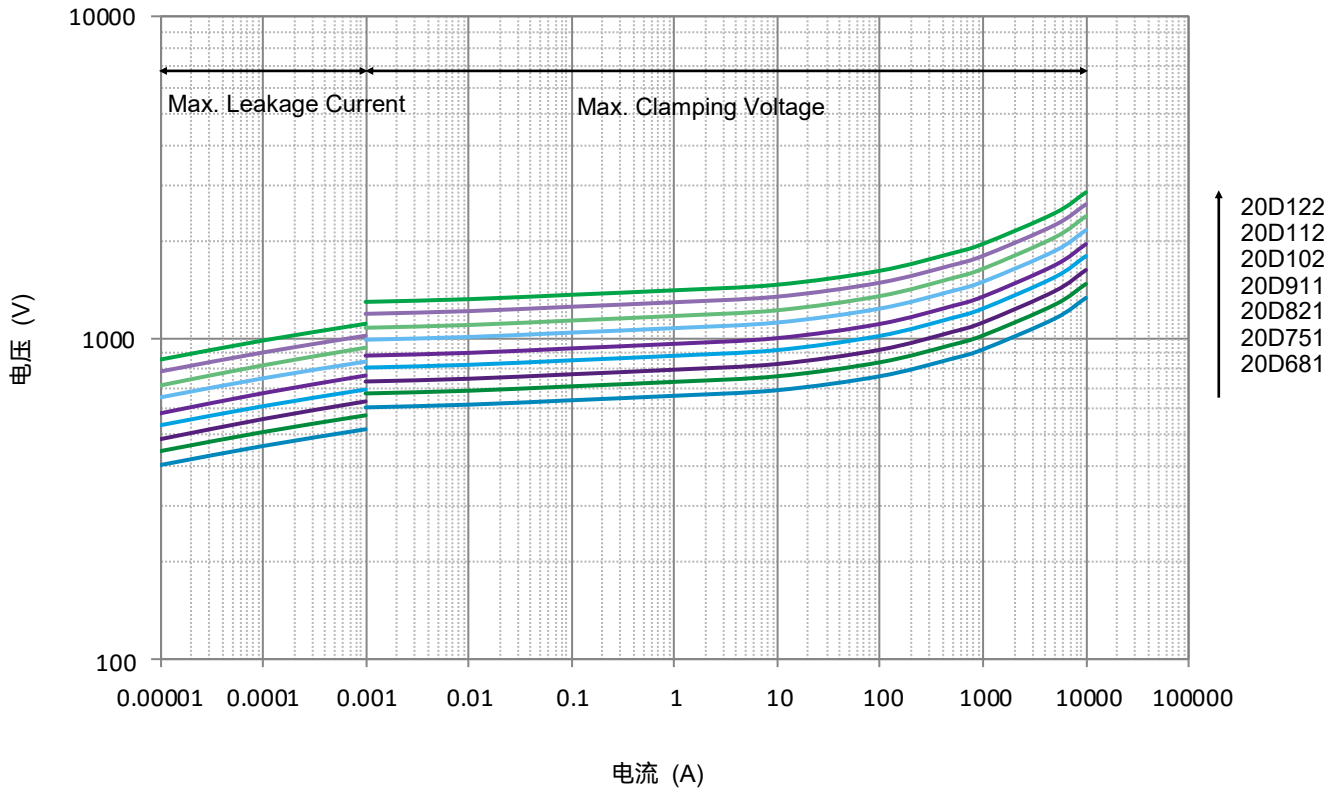

All Rights Reserved by Xiamen SET Electronics Co., Ltd. 2024-2026 V1.1

Packaging Information

- Bulk Packaging (Code: BUL)
- Bulk Packaging Quantity & Weight.

Series	Nominal Varistor Voltage	PE Bag	Box	Carton	G. W / Carton (365 × 265 × 245)
SFV20D Series	(V)	(PCS)	(PCS)	(PCS)	(kg)±10%
	220 ~ 471	250	500	3000	8 ~ 18
	511 ~ 821	200	400	2400	16 ~ 23
	911 ~ 122	100	200	1200	12 ~ 13

Note:
Other lead length packaging information, please contact SETsafe | SETfuse.

All Dimensions in mm

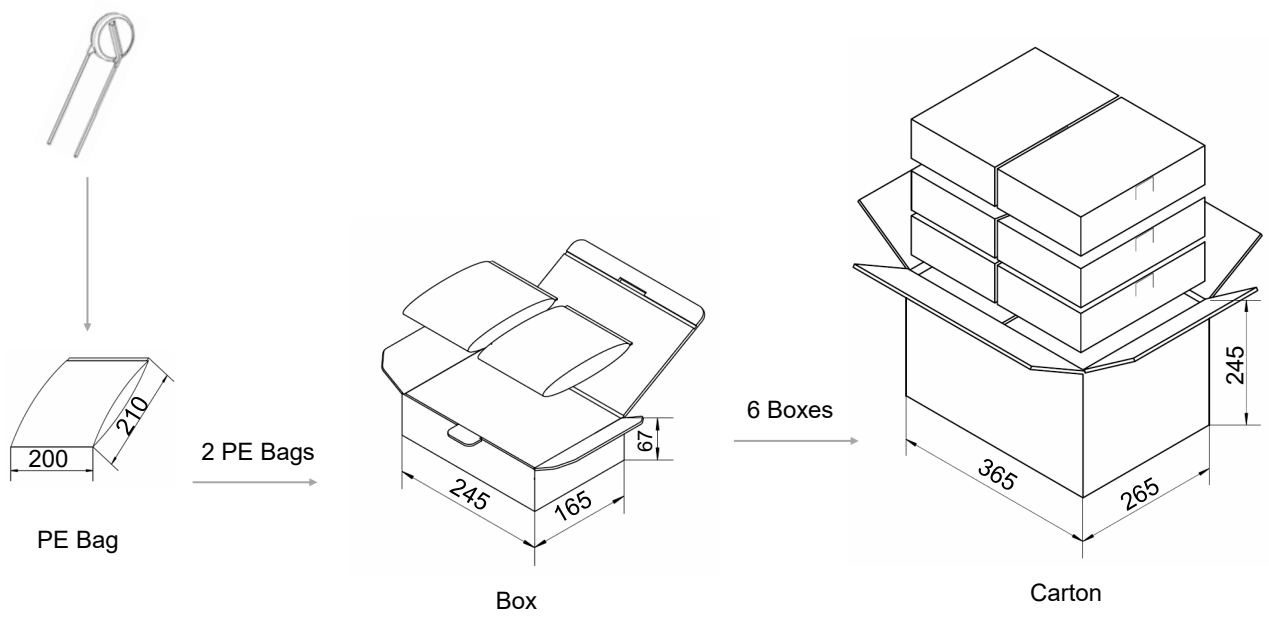

All Rights Reserved by Xiamen SET Electronics Co., Ltd. 2024-2026 V1.1

Packaging Information

- Tape Packaging (Code: 1AB)

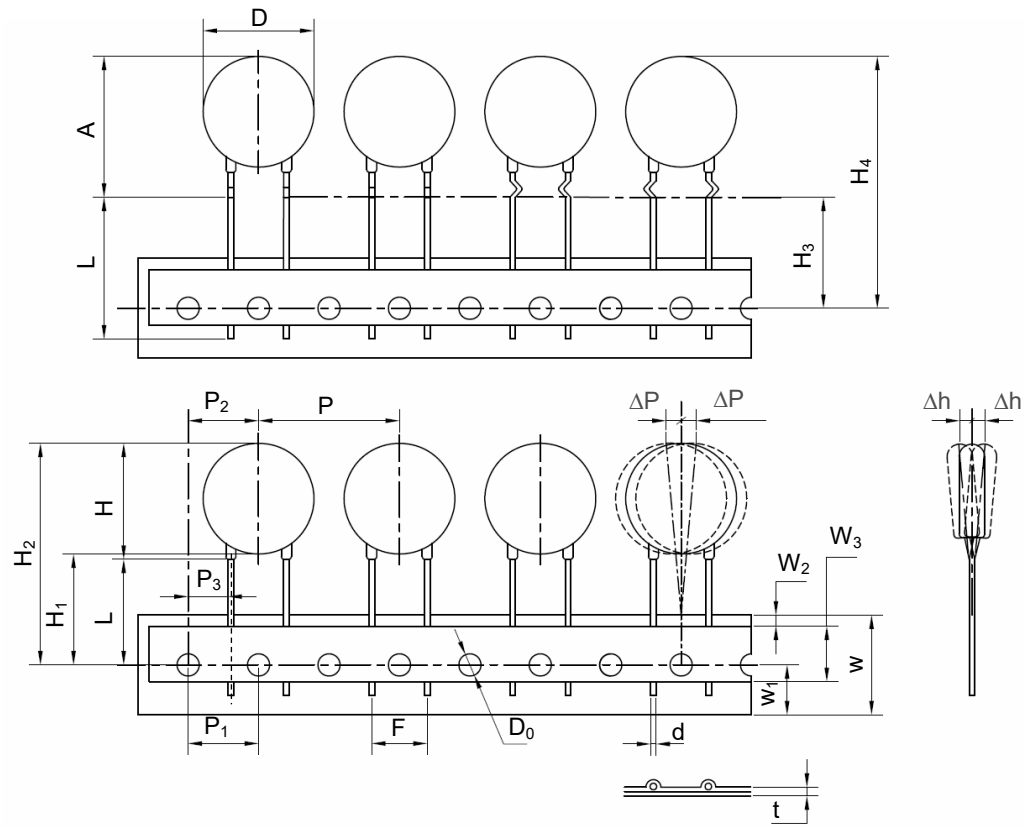

Dimensions (mm)	
P	25.4±1.0
P_1	12.7±0.3
P_2	12.7±1.3
P_3	7.7±0.7
ΔP(max.)	1.0
W	18.0±1.0
W_1	9.0±1.0
W_2(max.)	3.0
W_3	10.0±2.0
H(max.)	25.5
H_1	18.0
H_2(max.)	$45.0^{+2.0}_{-0}$
H_3	18.0
H_4(max.)	$48.0^{+2.0}_{-0}$
Δh(max.)	2.0
t (max.)	0.6
D(max.)	23.0
D_0	4.0±0.2
d	1.00±0.05
A(max.)	27.5
F	10.0±1.0
L(min.)	/

- Tape Packaging Quantity & Weight.

Series	Nominal Varistor Voltage	Box	Carton	G. W / Carton (365 × 265 × 415)
	(V)	(PCS)	(PCS)	(kg)±10%
20D	102 ~ 122	250	1500	18 ~ 22
	751 ~ 911	300	1800	17 ~ 20
	621 ~ 681	350	2100	17 ~ 18
	471 ~ 561	400	2400	16 ~ 17
	391~ 431	450	2700	15 ~ 16
	680			16
	301 ~ 361	500	3000	15 ~ 16
	560			15
	221 ~ 271	550	3300	13 ~ 15
	151			15
	390 ~ 470			13 ~ 15
	181 ~ 201	600	3600	13 ~ 14
	820 ~ 121			11 ~ 14
	220 ~ 330			11 ~ 14

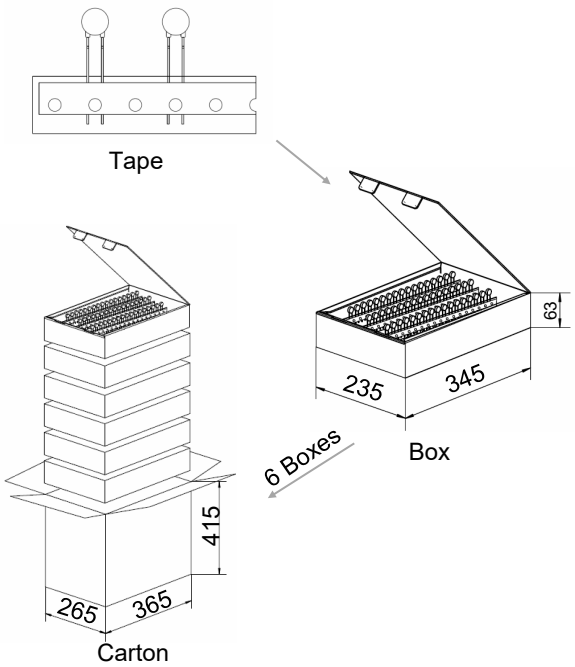

All Rights Reserved by Xiamen SET Electronics Co., Ltd. 2024-2026 V1.1

Packaging Information

- Tape Packaging (Code: 1EB)

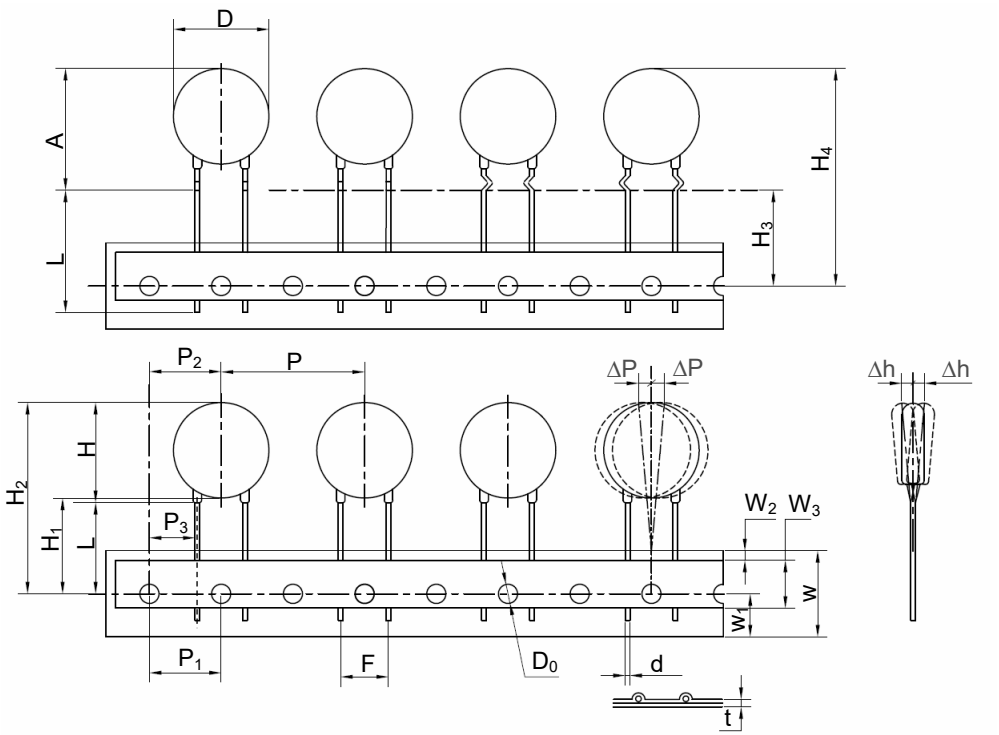

Dimensions (mm)	
P	30.0±1.0
P_1	15.0±0.3
P_2	15.0±1.3
P_3	10.0±1.0
ΔP(max.)	1.0
W	18.0±1.0
W_1	9.0±1.0
W_2(max.)	3.0
W_3	10.0±2.0
H(max.)	25.5
H_1	18.0
H_2(max.)	$45.0^{+2.0}_{-0}$
H_3	18.0
H_4(max.)	$48.0^{+2.0}_{-0}$
Δh(max.)	2.0
t (max.)	0.6
D(max.)	23.0
D_0	4.0±0.2
d	1.00±0.05
A(max.)	27.5
F	10.0±0.5
L(min.)	/

- Tape Packaging Quantity & Weight.

Series	Nominal Varistor Voltage	Box	Carton	G. W / Carton (365 × 265 × 415)
20D	(V)	(PCS)	(PCS)	(kg)±10%
	102 ~ 122	200	1200	14 ~ 16
	751 ~ 911	250	1500	14 ~ 16
	561 ~ 681	300	1800	13 ~ 15
	431 ~ 511	350	2100	13 ~ 14
	331 ~ 391	400	2400	12 ~ 14
	560 ~ 680			12 ~ 13
	241 ~ 301	450	2700	11 ~ 13
	390 ~ 470			11 ~ 12
	181 ~ 221	500	3000	10 ~ 12
	820 ~ 121			10 ~ 11
	220 ~ 330			9 ~ 11

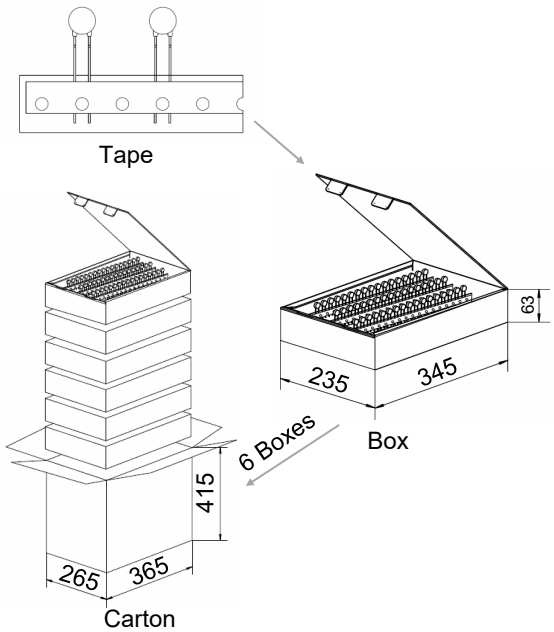

All Rights Reserved by Xiamen SET Electronics Co., Ltd. 2024-2026 V1.1

Dimensions (mm)

Model	L (Min.)	H (Max.)	T (Max.)	D (Max.)	d	F	F_1	A (Max.)
SFV25D220K	20	32	5.5	28	1.20±0.05	10.0±1.0	1.3 ~ 2.9	35
SFV25D270K	20	32	5.8	28	1.20±0.05	10.0±1.0	1.4 ~ 3.1	35
SFV25D330K	20	32	6.1	28	1.20±0.05	10.0±1.0	1.5 ~ 3.3	35
SFV25D390K	20	32	6.4	28	1.20±0.05	10.0±1.0	1.6 ~ 3.5	35
SFV25D470K	20	32	5.6	28	1.20±0.05	10.0±1.0	1.4 ~ 3.1	35
SFV25D560K	20	32	5.8	28	1.20±0.05	10.0±1.0	1.5 ~ 3.3	35
SFV25D680K	20	32	6.1	28	1.20±0.05	10.0±1.0	1.6 ~ 3.6	35
SFV25D820K	20	32	5.4	28	1.20±0.05	10.0±1.0	1.4 ~ 3.0	35
SFV25D101K	20	32	5.6	28	1.20±0.05	10.0±1.0	1.5 ~ 3.2	35
SFV25D121K	20	32	5.8	28	1.20±0.05	10.0±1.0	1.6 ~ 3.4	35
SFV25D151K	20	32	6.1	28	1.20±0.05	10.0±1.0	1.7 ~ 3.7	35
SFV25D181K	20	32	5.4	28	1.20±0.05	10.0±1.0	1.4 ~ 3.3	35
SFV25D201K	20	32	5.5	28	1.20±0.05	10.0±1.0	1.5 ~ 3.4	35
SFV25D221K	20	32	5.6	28	1.20±0.05	10.0±1.0	1.6 ~ 3.5	35
SFV25D241K	20	32	5.7	28	1.20±0.05	10.0±1.0	1.7 ~ 3.6	35
SFV25D271K	20	32	5.9	28	1.20±0.05	10.0±1.0	1.8 ~ 3.8	35
SFV25D301K	20	32	5.7	28	1.20±0.05	10.0±1.0	1.6 ~ 3.6	35
SFV25D331K	20	32	5.9	28	1.20±0.05	10.0±1.0	1.8 ~ 3.8	35
SFV25D361K	20	32	6.5	28	1.20±0.05	10.0±1.0	1.9 ~ 3.9	35
SFV25D391K	20	32	6.0	28	1.20±0.05	10.0±1.0	2.1 ~ 4.1	35
SFV25D431K	20	32	6.2	28	1.20±0.05	10.0±1.0	2.2 ~ 4.2	35
SFV25D471K	20	32	6.4	28	1.20±0.05	10.0±1.0	2.4 ~ 4.4	35
SFV25D511K	20	32	6.6	28	1.20±0.05	10.0±1.0	2.6 ~ 4.6	35
SFV25D561K	20	32	6.8	28	1.20±0.05	10.0±1.0	2.9 ~ 4.9	35
SFV25D621K	20	32	7.0	28	1.20±0.05	10.0±1.0	3.2 ~ 5.2	35
SFV25D681K	20	32	8.5	28	1.20±0.05	10.0±1.0	3.4 ~ 5.4	35
SFV25D751K	20	32	8.9	28	1.20±0.05	10.0±1.0	3.8 ~ 5.8	35
SFV25D821K	20	32	9.4	28	1.20±0.05	10.0±1.0	4.1 ~ 6.1	35
SFV25D911K	20	32	9.9	28	1.20±0.05	10.0±1.0	4.5 ~ 6.5	35
SFV25D102K	20	32	10.5	28	1.20±0.05	10.0±1.0	5.0 ~ 7.0	35
SFV25D112K	20	32	11.1	28	1.20±0.05	10.0±1.0	5.4 ~ 7.4	35
SFV25D122K	20	32	11.7	28	1.20±0.05	10.0±1.0	5.9 ~ 7.9	35

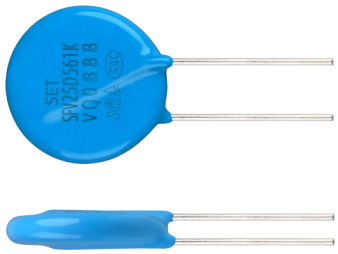

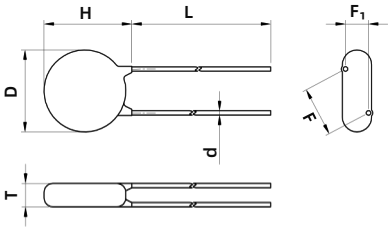

Straight Lead (A)

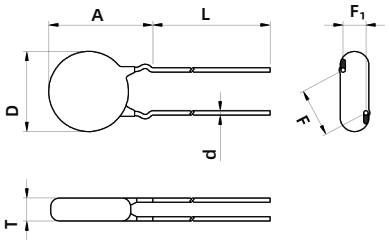

Outward Crimp (C)

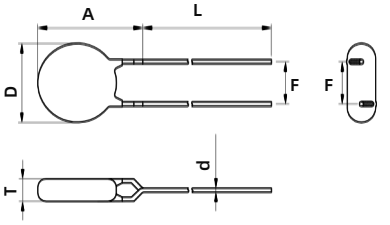

Inline Crimp (D)

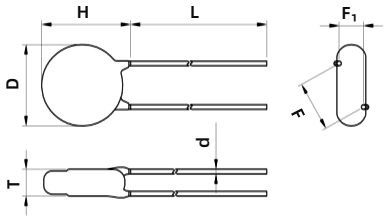

Little Straight Lead (I)

Note:
The above data is for reference only.

All Rights Reserved by Xiamen SET Electronics Co., Ltd. 2024-2026 V1.1

Specification

Model	Max. Continuous Operating Voltage		Varistor Voltage @1 mA DC		Clamping Voltage (Max.)		Max. Discharge Current (8/20 μs)		Max. Energy (10/1000 μs)	Typical Capacitance (For reference only) @1 kHz	Agency Information			
	VAC	VDC	Min.	Max.	V_C	I_P	I_n	I_{max}	(J)	(pF)	UL	cUL	TUV	CQC
	(V)	(V)	(V)	(V)	(V)	(A)	(kA)	(kA)						
SFV25D220K	14	18	20	24	43	30	1.5	3	25	20500	●	●	○	○
SFV25D270K	17	22	24	31	53	30	1.5	3	30	26500	●	●	○	○
SFV25D330K	20	26	30	36	65	30	1.5	3	35	18000	●	●	○	○
SFV25D390K	25	31	35	43	77	30	1.5	3	40	13500	●	●	○	○
SFV25D470K	30	38	42	52	93	30	3	6	50	11500	●	●	●	●
SFV25D560K	35	45	50	62	110	30	3	6	60	10500	●	●	●	●
SFV25D680K	40	56	61	75	135	30	3	6	70	9050	●	●	●	●
SFV25D820K	50	65	74	90	135	150	10	20	80	7700	●	●	●	●
SFV25D101K	60	85	90	110	165	150	10	20	100	6300	●	●	●	●
SFV25D121K	75	100	108	132	200	150	10	20	120	5200	●	●	●	●
SFV25D151K	95	125	135	165	250	150	10	20	160	4300	●	●	●	●
SFV25D181K	115	150	162	198	300	150	10	20	175	3500	●	●	●	●
SFV25D201K	130	170	180	220	340	150	10	20	190	3200	●	●	●	●
SFV25D221K	140	180	198	242	360	150	10	20	200	2900	●	●	●	●
SFV25D241K	150	200	216	264	395	150	10	20	220	2650	●	●	●	●
SFV25D271K	175	225	243	297	455	150	10	20	255	2400	●	●	●	●
SFV25D301K	190	250	270	330	500	150	10	20	275	2100	●	●	●	●
SFV25D331K	210	275	297	363	550	150	10	20	300	1900	●	●	●	●
SFV25D361K	230	300	324	396	595	150	10	20	330	1750	●	●	●	●
SFV25D391K	250	320	351	429	650	150	10	20	360	1600	●	●	●	●
SFV25D431K	275	350	387	473	710	150	10	20	380	1500	●	●	●	●
SFV25D471K	300	385	423	517	775	150	10	20	400	1400	●	●	●	●
SFV25D511K	320	415	459	561	845	150	10	20	420	1250	●	●	●	●
SFV25D561K	350	460	504	616	925	150	10	20	440	1150	●	●	●	●
SFV25D621K	385	505	558	682	1025	150	10	20	450	1050	●	●	●	●
SFV25D681K	420	560	612	748	1120	150	10	20	460	950	●	●	●	●
SFV25D751K	460	615	675	825	1240	150	10	20	510	850	●	●	●	●
SFV25D821K	510	670	738	902	1355	150	10	20	520	830	●	●	●	●
SFV25D911K	550	745	819	1001	1500	150	10	20	620	730	●	●	●	●
SFV25D102K	625	825	900	1100	1650	150	10	20	690	660	●	●	●	●
SFV25D112K	680	895	990	1210	1815	150	10	20	760	600	●	●	●	●
SFV25D122K	750	990	1080	1320	1980	150	10	20	820	530	●	●	●	●

●: Approved ○: Unauthorized ● RoHS & REACH Compliant

All Rights Reserved by Xiamen SET Electronics Co., Ltd. 2024-2026 V1.1

Performance Curve (For reference only)

- Max. Peak Current Derating Curves

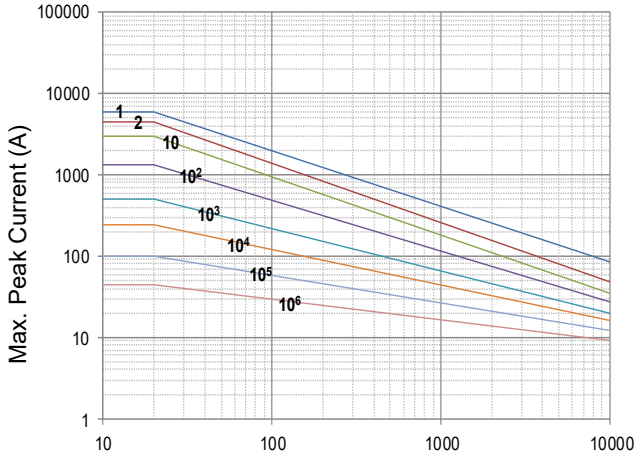

Impulse Duration (μs)
SFV25D220K to SFV25D680K

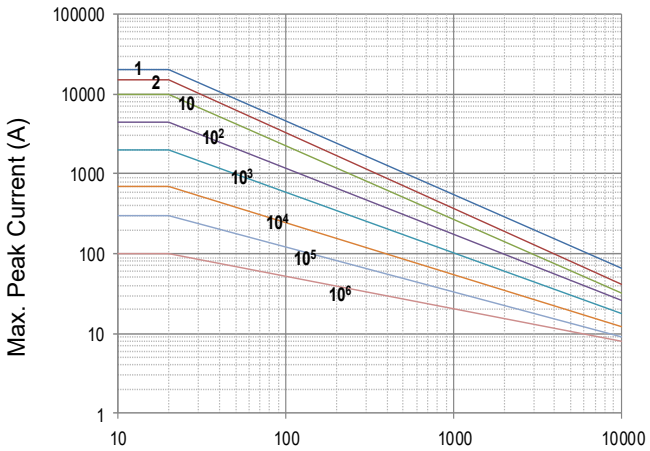

Impulse Duration (μs)
SFV25D820K to SFV25D122K

Note: 1, 2, 10, 10^2, 10^3, 10^4, 10^5, 10^6 Stand for Repetitions.

- Voltage-Current Characteristic Curves

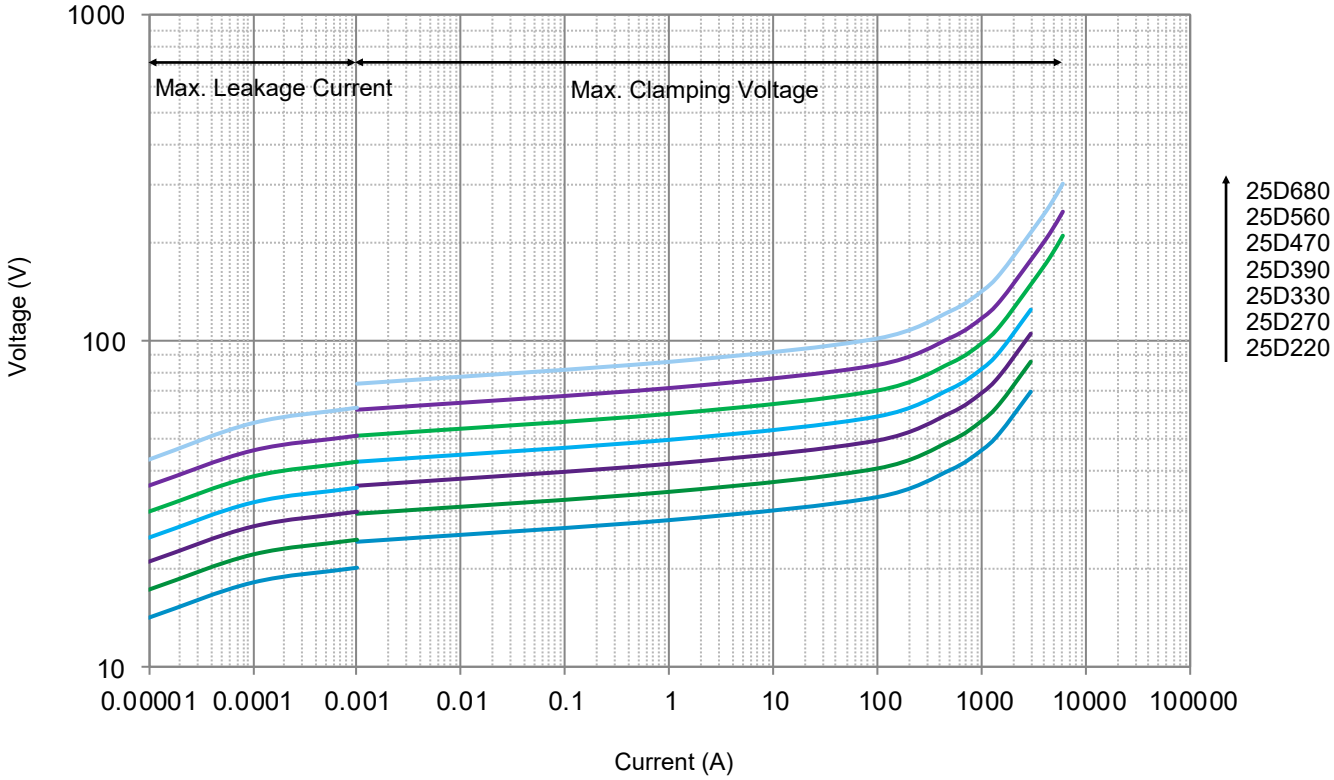

All Rights Reserved by Xiamen SET Electronics Co., Ltd. 2024-2026 V1.1

- Voltage-Current Characteristic Curves

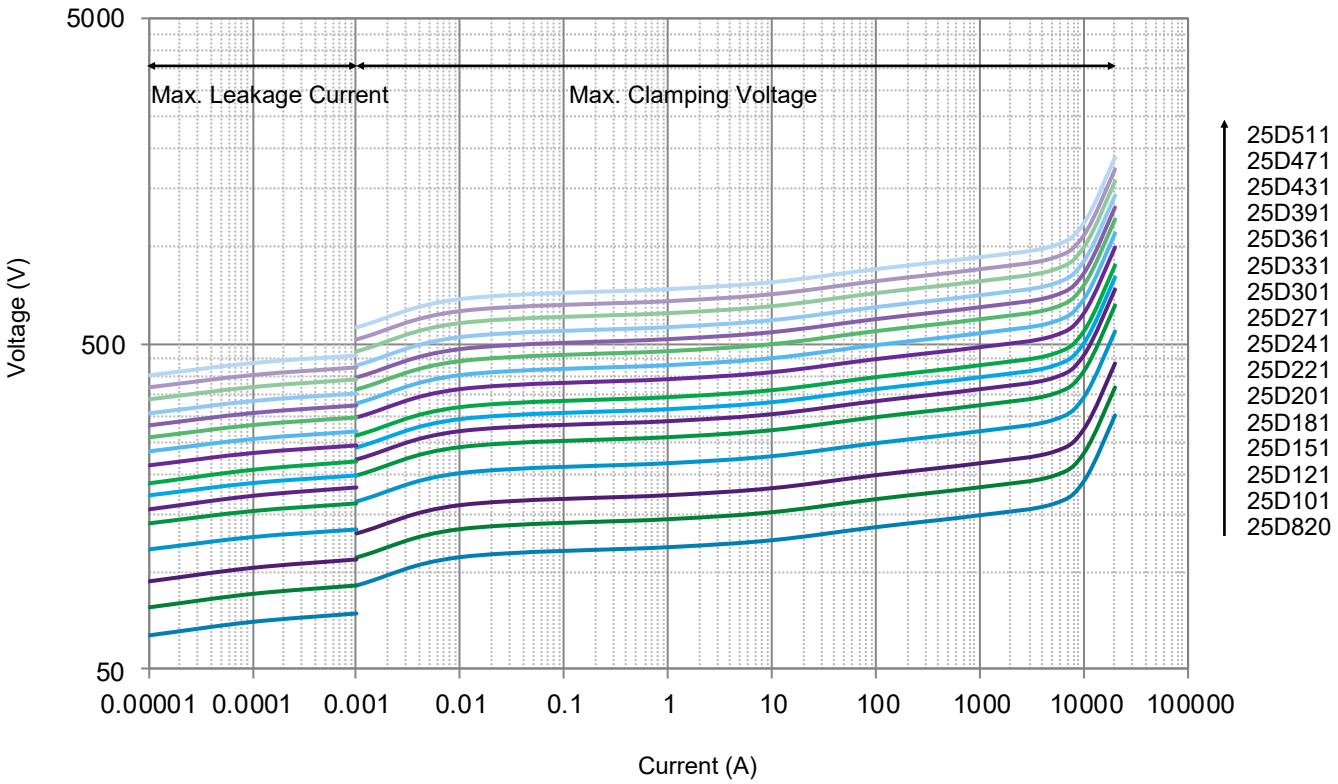

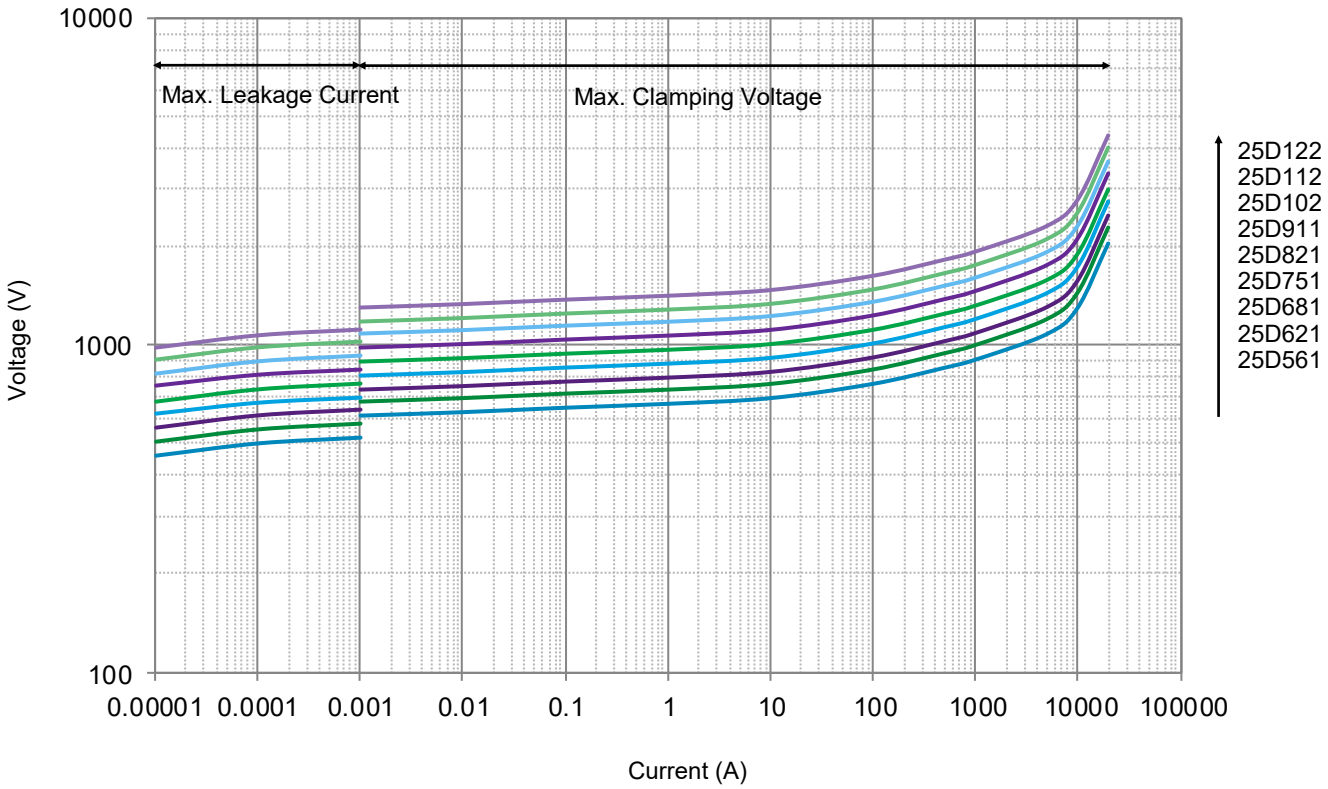

All Rights Reserved by Xiamen SET Electronics Co., Ltd. 2024-2026 V1.1

Packaging Information

- Bulk Packaging (Code: BUL)
- Bulk Packaging Quantity & Weight.

Series	Nominal Varistor Voltage	PE Bag	Box	Carton	G. W / Carton (365 × 265 × 245)
SFV25D Series	(V)	(PCS)	(PCS)	(PCS)	(kg)±10%
	220 ~ 621	100	200	1200	5 ~ 15
	681 ~ 122	80	160	960	13 ~ 21

Note:
Other lead length packaging information, please contact SETsafe | SETfuse.

All Dimensions in mm

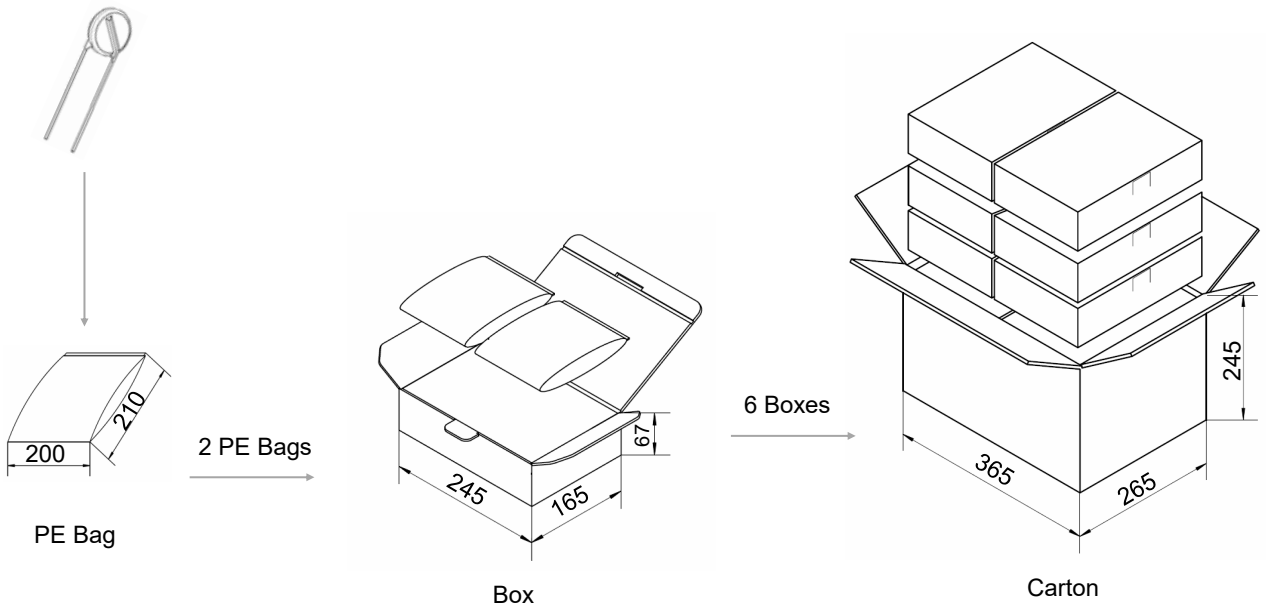

All Rights Reserved by Xiamen SET Electronics Co., Ltd. 2024-2026 V1.1

Dimensions (mm)

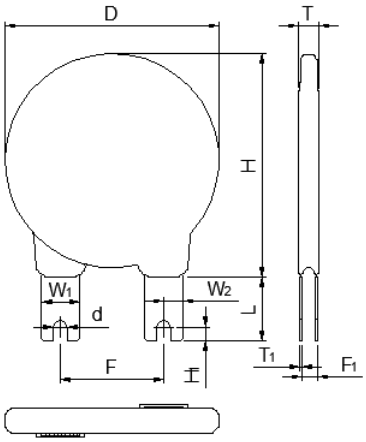

Model	L (min.)	W_1	W_2	H (Max.)	H_1	T (Max.)	T_1	D (Max.)	d	F	F_1
SFV53D820K	16.0	9.7±0.5	4.85±0.10	64.0	3.6±0.3	4.3	0.5±0.1	56.5	3.8±0.2	25.4±0.6	0.7 ~ 2.6
SFV53D101K	16.0	9.7±0.5	4.85±0.10	64.0	3.6±0.3	4.5	0.5±0.1	56.5	3.8±0.2	25.4±0.6	0.9 ~ 2.8
SFV53D121K	16.0	9.7±0.5	4.85±0.10	64.0	3.6±0.3	4.7	0.5±0.1	56.5	3.8±0.2	25.4±0.6	1.0 ~ 3.0
SFV53D151K	16.0	9.7±0.5	4.85±0.10	64.0	3.6±0.3	5.1	0.5±0.1	56.5	3.8±0.2	25.4±0.6	1.4 ~ 3.4
SFV53D181K	16.0	9.7±0.5	4.85±0.10	64.0	3.6±0.3	5.4	0.5±0.1	56.5	3.8±0.2	25.4±0.6	1.7 ~ 3.7
SFV53D201K	16.0	9.7±0.5	4.85±0.10	64.0	3.6±0.3	5.6	0.5±0.1	56.5	3.8±0.2	25.4±0.6	1.9 ~ 3.9
SFV53D221K	16.0	9.7±0.5	4.85±0.10	64.0	3.6±0.3	5.8	0.5±0.1	56.5	3.8±0.2	25.4±0.6	2.1 ~ 4.1
SFV53D241K	16.0	9.7±0.5	4.85±0.10	64.0	3.6±0.3	6.1	0.5±0.1	56.5	3.8±0.2	25.4±0.6	2.4 ~ 4.4
SFV53D271K	16.0	9.7±0.5	4.85±0.10	64.0	3.6±0.3	6.4	0.5±0.1	56.5	3.8±0.2	25.4±0.6	2.7 ~ 4.7
SFV53D301K	16.0	9.7±0.5	4.85±0.10	64.0	3.6±0.3	5.2	0.5±0.1	56.5	3.8±0.2	25.4±0.6	1.5 ~ 3.5
SFV53D331K	16.0	9.7±0.5	4.85±0.10	64.0	3.6±0.3	5.4	0.5±0.1	56.5	3.8±0.2	25.4±0.6	1.7 ~ 3.7
SFV53D361K	16.0	9.7±0.5	4.85±0.10	64.0	3.6±0.3	5.6	0.5±0.1	56.5	3.8±0.2	25.4±0.6	1.9 ~ 3.9
SFV53D391K	16.0	9.7±0.5	4.85±0.10	64.0	3.6±0.3	5.8	0.5±0.1	56.5	3.8±0.2	25.4±0.6	2.1 ~ 4.1
SFV53D431K	16.0	9.7±0.5	4.85±0.10	64.0	3.6±0.3	6.1	0.5±0.1	56.5	3.8±0.2	25.4±0.6	2.3 ~ 4.3
SFV53D471K	16.0	9.7±0.5	4.85±0.10	64.0	3.6±0.3	6.4	0.5±0.1	56.5	3.8±0.2	25.4±0.6	2.5 ~ 4.5
SFV53D511K	16.0	9.7±0.5	4.85±0.10	64.0	3.6±0.3	6.6	0.5±0.1	56.5	3.8±0.2	25.4±0.6	2.8 ~ 4.8
SFV53D561K	16.0	9.7±0.5	4.85±0.10	64.0	3.6±0.3	7.0	0.5±0.1	56.5	3.8±0.2	25.4±0.6	3.1 ~ 5.1
SFV53D621K	16.0	9.7±0.5	4.85±0.10	64.0	3.6±0.3	7.4	0.5±0.1	56.5	3.8±0.2	25.4±0.6	3.5 ~ 5.5
SFV53D681K	16.0	9.7±0.5	4.85±0.10	64.0	3.6±0.3	7.8	0.5±0.1	56.5	3.8±0.2	25.4±0.6	3.8 ~ 5.8
SFV53D751K	16.0	9.7±0.5	4.85±0.10	64.0	3.6±0.3	8.2	0.5±0.1	56.5	3.8±0.2	25.4±0.6	4.2 ~ 6.2
SFV53D821K	16.0	9.7±0.5	4.85±0.10	64.0	3.6±0.3	8.7	0.5±0.1	56.5	3.8±0.2	25.4±0.6	4.7 ~ 6.7
SFV53D911K	16.0	9.7±0.5	4.85±0.10	64.0	3.6±0.3	9.3	0.5±0.1	56.5	3.8±0.2	25.4±0.6	5.2 ~ 7.2
SFV53D102K	16.0	9.7±0.5	4.85±0.10	64.0	3.6±0.3	9.9	0.5±0.1	56.5	3.8±0.2	25.4±0.6	5.8 ~ 7.8
SFV53D112K	16.0	9.7±0.5	4.85±0.10	64.0	3.6±0.3	10.6	0.5±0.1	56.5	3.8±0.2	25.4±0.6	6.4 ~ 8.4
SFV53D122K	16.0	9.7±0.5	4.85±0.10	64.0	3.6±0.3	11.2	0.5±0.1	56.5	3.8±0.2	25.4±0.6	7.0 ~ 9.0

Note:
The above data is for reference only.

All Rights Reserved by Xiamen SET Electronics Co., Ltd. 2024-2026 V1.1

Specification

Model	Max. Continuous Operating Voltage		Varistor Voltage @1 mA dc		Clamping Voltage (Max.)		Max. Discharge Current (8/20 μs)		Max. Energy (10/1000 μs)	Typical Capacitance (For reference only) @1 kHz	Agency Information			
	VAC	VDC	Min.	Max.	V_C	I_P	I_n	I_{max}	(J)	(pF)	UL	cUL	TUV	CQC
	(V)	(V)	(V)	(V)	(V)	(A)	(kA)	(kA)						
SFV53D820K	50	65	74	90	135	500	35	70	185	35000	●	●	○	○
SFV53D101K	60	85	90	110	165	500	35	70	240	28500	●	●	○	○
SFV53D121K	75	100	108	132	200	500	35	70	340	23500	●	●	○	○
SFV53D151K	95	125	135	165	250	500	35	70	430	19000	●	●	○	○
SFV53D181K	115	150	162	198	300	500	35	70	500	17000	●	●	○	○
SFV53D201K	130	170	180	220	340	500	35	70	550	15000	●	●	○	○
SFV53D221K	140	180	198	242	360	500	35	70	600	13750	●	●	○	○
SFV53D241K	150	200	216	264	395	500	35	70	650	12500	●	●	○	○
SFV53D271K	175	225	243	297	455	500	35	70	700	11000	●	●	○	○
SFV53D301K	190	250	270	330	500	500	35	70	765	10000	●	●	○	○
SFV53D331K	210	275	297	363	550	500	35	70	825	9000	●	●	○	○
SFV53D361K	230	300	324	396	595	500	35	70	850	8500	●	●	○	○
SFV53D391K	250	320	351	429	650	500	35	70	885	7500	●	●	○	○
SFV53D431K	275	350	387	473	710	500	35	70	990	7000	●	●	○	○
SFV53D471K	300	385	423	517	775	500	35	70	1080	6500	●	●	○	○
SFV53D511K	320	415	459	561	845	500	35	70	1150	6000	●	●	○	○
SFV53D561K	350	460	504	616	925	500	35	70	1200	5500	●	●	○	○
SFV53D621K	385	505	558	682	1025	500	35	70	1300	5000	●	●	○	○
SFV53D681K	420	560	612	748	1120	500	35	70	1350	4500	●	●	○	○
SFV53D751K	460	615	675	825	1240	500	35	70	1400	4000	●	●	○	○
SFV53D821K	510	670	738	902	1355	500	35	70	1600	3700	●	●	○	○
SFV53D911K	550	745	819	1001	1500	500	35	70	1700	3300	●	●	○	○
SFV53D102K	625	825	900	1100	1650	500	35	70	1890	3000	●	●	○	○
SFV53D112K	680	895	990	1210	1815	500	35	70	2050	2700	●	●	○	○
SFV53D122K	750	990	1080	1320	1980	500	35	70	2160	2500	●	●	○	○

●: Approved ○: Unauthorized ● RoHS & REACH Compliant

All Rights Reserved by Xiamen SET Electronics Co., Ltd. 2024-2026 V1.1

Performance Curve (For reference only)

- Max. Peak Current Derating Curves

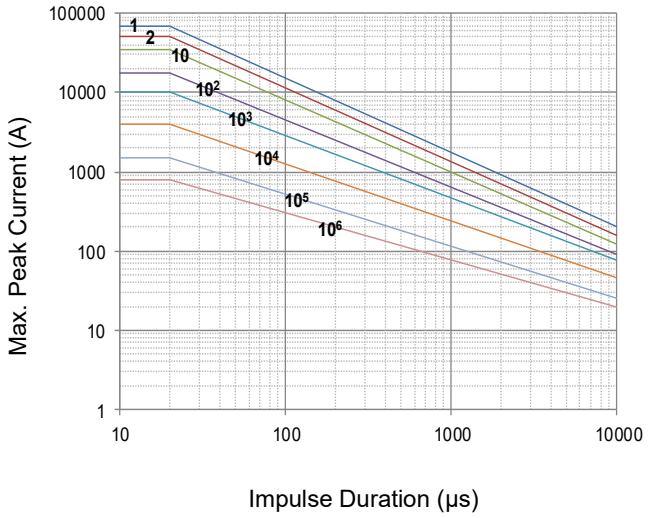

SFV53D820K to SFV53D122K

Note: 1, 2, 10, 10^2, 10^3, 10^4, 10^5, 10^6 Stand for Repetitions

- Voltage-Current Characteristic Curves

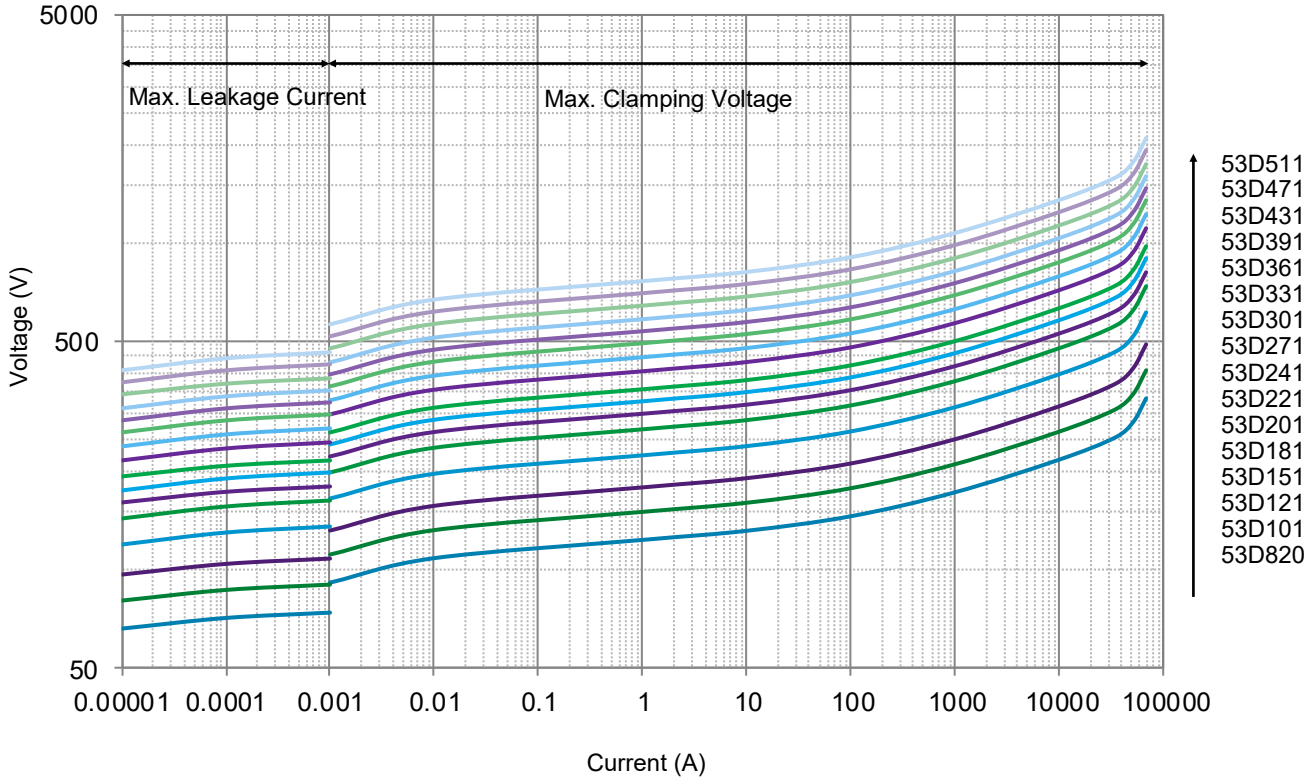

All Rights Reserved by Xiamen SET Electronics Co., Ltd. 2024-2026 V1.1

- Voltage-Current Characteristic Curves

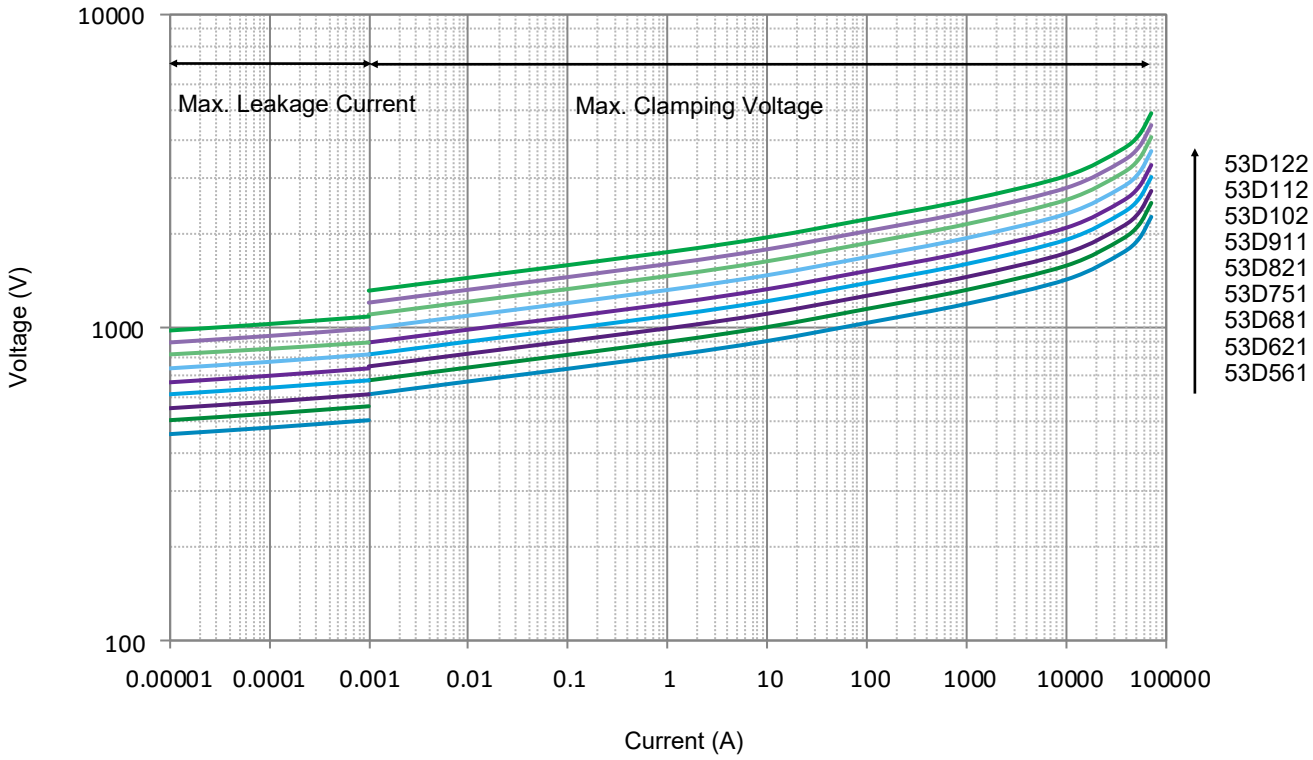

All Rights Reserved by Xiamen SET Electronics Co., Ltd. 2024-2026 V1.1

Packaging Information

- Bulk Packaging (Code: BUL)
- Bulk Packaging Quantity & Weight.

Series	Nominal Varistor Voltage	PE Bag	Box	Carton	G. W / Carton (365 × 265 × 245)
	(V)	(PCS)	(PCS)	(PCS)	(kg)±10%
SFV53D Series	820 ~ 221	25	50	300	8 ~ 15
	241 ~ 431	20	40	240	11 ~ 12
	471 ~ 751	15	30	180	7 ~ 13
	821 ~ 122	10	20	120	10 ~ 14

Note:
Other lead length packaging information, please contact SETsafe | SETfuse.

All Dimensions in mm

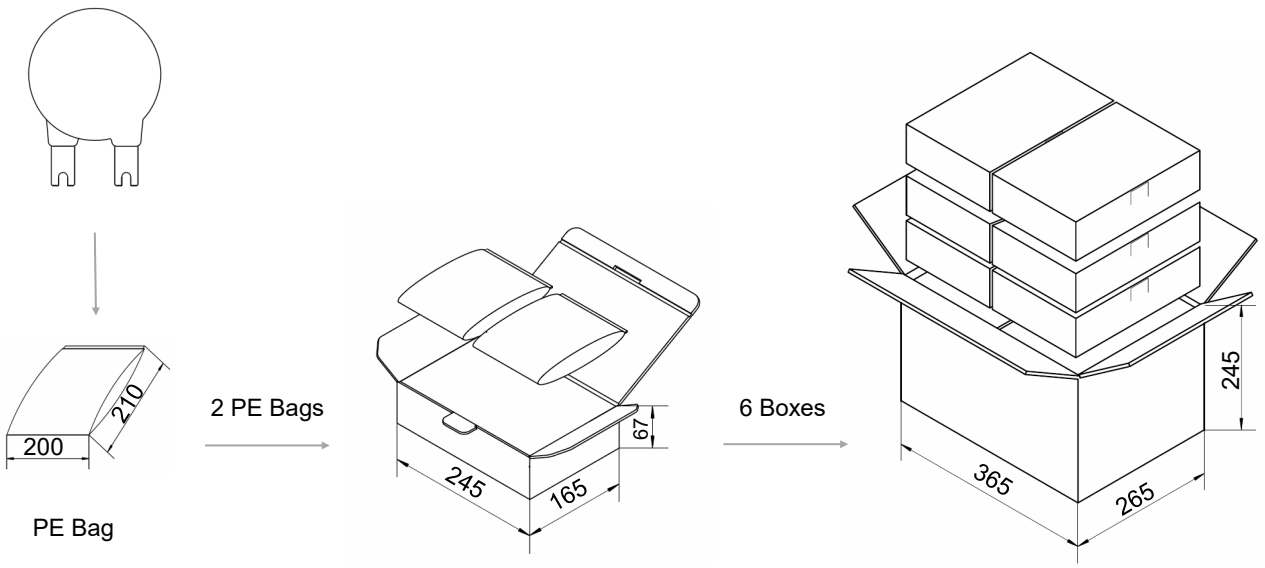

All Rights Reserved by Xiamen SET Electronics Co., Ltd. 2024-2026 V1.1

Dimensions (mm)

Model	L (Min.)	H (Max.)	T (Max.)	D (Max.)	d	F	F_1	A (Max.)
SFV7D820KM	20	12	4.0	9.0	0.60±0.05	5.0±0.6	1.1 ~ 2.4	12.5
SFV7D101KM	20	12	4.2	9.0	0.60±0.05	5.0±0.6	1.2 ~ 2.6	12.5
SFV7D121KM	20	12	4.4	9.0	0.60±0.05	5.0±0.6	1.3 ~ 2.8	12.5
SFV7D151KM	20	12	4.7	9.0	0.60±0.05	5.0±0.6	1.4 ~ 3.1	12.5
SFV7D181KM	20	12	4.0	9.0	0.60±0.05	5.0±0.6	1.0 ~ 2.4	12.5
SFV7D201KM	20	12	4.2	9.0	0.60±0.05	5.0±0.6	1.1 ~ 2.5	12.5
SFV7D221KM	20	12	4.3	9.0	0.60±0.05	5.0±0.6	1.2 ~ 2.6	12.5
SFV7D241KM	20	12	4.4	9.0	0.60±0.05	5.0±0.6	1.3 ~ 2.7	12.5
SFV7D271KM	20	12	4.5	9.0	0.60±0.05	5.0±0.6	1.4 ~ 2.9	12.5
SFV7D301KM	20	12	4.7	9.0	0.60±0.05	5.0±0.6	1.5 ~ 3.0	12.5
SFV7D331KM	20	12	4.9	9.0	0.60±0.05	5.0±0.6	1.6 ~ 3.1	12.5
SFV7D361KM	20	12	5.0	9.0	0.60±0.05	5.0±0.6	1.7 ~ 3.3	12.5
SFV7D391KM	20	12	5.2	9.0	0.60±0.05	5.0±0.6	1.8 ~ 3.4	12.5
SFV7D431KM	20	12	5.4	9.0	0.60±0.05	5.0±0.6	2.0 ~ 3.6	12.5
SFV7D471KM	20	12	5.7	9.0	0.60±0.05	5.0±0.6	2.0 ~ 3.8	12.5
SFV7D511KM	20	12	5.9	9.0	0.60±0.05	5.0±0.6	2.0 ~ 4.0	12.5
SFV7D561KM	20	12	6.2	9.0	0.60±0.05	5.0±0.6	2.2 ~ 4.2	12.5
SFV7D621KM	20	12	6.5	9.0	0.60±0.05	5.0±0.6	2.5 ~ 4.5	12.5
SFV7D681KM	20	12	6.8	9.0	0.60±0.05	5.0±0.6	2.8 ~ 4.8	12.5
SFV7D751KM	20	12	7.2	9.0	0.60±0.05	5.0±0.6	3.1 ~ 5.1	12.5
SFV7D821KM	20	12	7.6	9.0	0.60±0.05	5.0±0.6	3.4 ~ 5.4	12.5

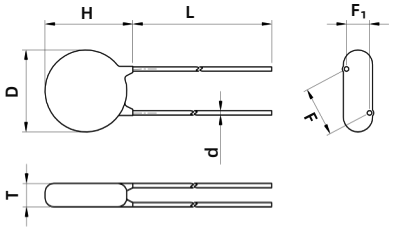

Straight Lead (A)

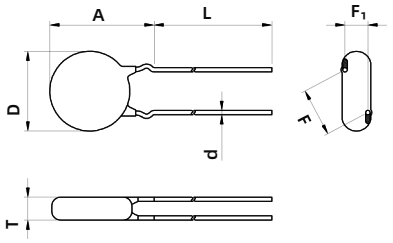

Outward Crimp (C)

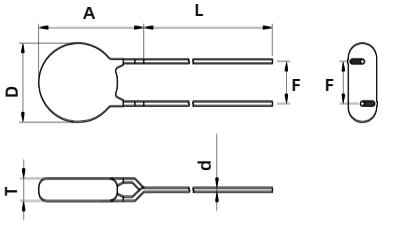

Inline Crimp (D)

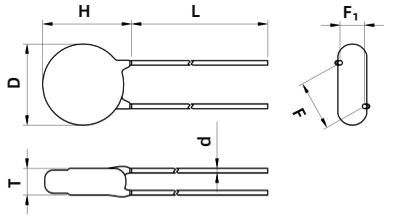

Little Straight Lead (I)

Note:
The above data is for reference only.

All Rights Reserved by Xiamen SET Electronics Co., Ltd. 2024-2026 V1.1

Specification

Model	Surge Level	Max. Continuous Operating Voltage		Varistor Voltage @1 mA DC		Clamping Voltage (Max.)		Max. Peak Current (1 time, 8/20 μs)	Max. Energy (10/1000 μs)	Typical Capacitance (For reference only) @1 kHz	Agency Information	
		VAC	VDC	Min.	Max.	V_C	I_P	S		(pF)		
		(V)	(V)	(V)	(V)	(V)	(A)	(kA)	(J)		UL	CUL
SFV7D820KM	S	50	65	74	90	135	10	1.25	5.5	600	●	●
SFV7D101KM	S	60	85	90	110	165	10	1.25	6.5	500	●	●
SFV7D121KM	S	75	100	108	132	200	10	1.25	7.8	420	●	●
SFV7D151KM	S	95	125	135	165	250	10	1.25	9.7	330	●	●
SFV7D181KM	S	115	150	162	198	300	10	1.25	11.7	280	●	●
SFV7D201KM	S	130	170	180	220	340	10	1.25	13	250	●	●
SFV7D221KM	S	140	180	198	242	360	10	1.25	14	230	●	●
SFV7D241KM	S	150	200	216	264	395	10	1.25	15	210	●	●
SFV7D271KM	S	175	225	243	297	455	10	1.25	18	185	●	●
SFV7D301KM	S	190	250	270	330	500	10	1.25	20	165	●	●
SFV7D331KM	S	210	275	297	363	550	10	1.25	23	150	●	●
SFV7D361KM	S	230	300	324	396	595	10	1.25	25	140	●	●
SFV7D391KM	S	250	320	351	429	650	10	1.25	25	130	●	●
SFV7D431KM	S	275	350	387	473	710	10	1.25	28	115	●	●
SFV7D471KM	S	300	385	423	517	775	10	1.25	30	105	●	●
SFV7D511KM	S	320	415	459	561	845	10	1.25	30	100	●	●
SFV7D561KM	S	350	460	504	616	925	10	1.25	30	90	●	●
SFV7D621KM	S	385	505	558	682	1025	10	1.25	33	80	●	●
SFV7D681KM	S	420	560	612	748	1120	10	1.25	33	75	●	●
SFV7D751KM	S	460	615	675	825	1240	10	1.25	38	70	●	●
SFV7D821KM	S	510	670	738	902	1355	10	1.25	42	65	●	●

●: Approved ○: Unauthorized ● RoHS & REACH Compliant

All Rights Reserved by Xiamen SET Electronics Co., Ltd. 2024-2026 V1.1

Specification

Model	Surge Level	Max. Continuous Operating Voltage		Varistor Voltage @1 mA DC		Clamping Voltage (Max.)		Max. Peak Current (1 time, 8/20 μs)	Max. Energy (10/1000 μs)	Typical Capacitance (For reference only) @1 kHz	Agency Information	
		VAC	VDC	Min.	Max.	V_C	I_P	K		(pF)	UL	CUL
		(V)	(V)	(V)	(V)	(V)	(A)	(kA)	(J)			
SFV7D820KM	K	50	65	74	90	135	10	1.75	7.0	600	●	●
SFV7D101KM	K	60	85	90	110	165	10	1.75	8.5	500	●	●
SFV7D121KM	K	75	100	108	132	200	10	1.75	10	420	●	●
SFV7D151KM	K	95	125	135	165	250	10	1.75	13	330	●	●
SFV7D181KM	K	115	150	162	198	300	10	1.75	15	280	●	●
SFV7D201KM	K	130	170	180	220	340	10	1.75	17.5	250	●	●
SFV7D221KM	K	140	180	198	242	360	10	1.75	19	230	●	●
SFV7D241KM	K	150	200	216	264	395	10	1.75	21	210	●	●
SFV7D271KM	K	175	225	243	297	455	10	1.75	24	185	●	●
SFV7D301KM	K	190	250	270	330	500	10	1.75	26	165	●	●
SFV7D331KM	K	210	275	297	363	550	10	1.75	28	150	●	●
SFV7D361KM	K	230	300	324	396	595	10	1.75	32	140	●	●
SFV7D391KM	K	250	320	351	429	650	10	1.75	35	130	●	●
SFV7D431KM	K	275	350	387	473	710	10	1.75	40	115	●	●
SFV7D471KM	K	300	385	423	517	775	10	1.75	42	105	●	●
SFV7D511KM	K	320	415	459	561	845	10	1.75	45	100	●	●
SFV7D561KM	K	350	460	504	616	925	10	1.75	49	90	●	●
SFV7D621KM	K	385	505	558	682	1025	10	1.75	55	80	●	●
SFV7D681KM	K	420	560	612	748	1120	10	1.75	60	75	●	●
SFV7D751KM	K	460	615	675	825	1240	10	1.75	66	70	●	●
SFV7D821KM	K	510	670	738	902	1355	10	1.75	71	65	●	●

●: Approved ○: Unauthorized ● RoHS & REACH Compliant

All Rights Reserved by Xiamen SET Electronics Co., Ltd. 2024-2026 V1.1

Performance Curve (For reference only)

- Max. Peak Current Derating Curves

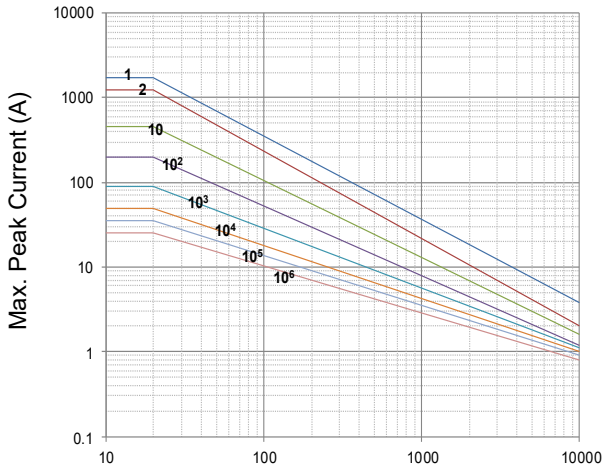

Impulse Duration (μs)

SFV7D820KM to SFV7D821KM

Note: 1, 2, 10, 10^2, 10^3, 10^4, 10^5, 10^6 Stand for Repetitions.

- Voltage-Current Characteristic Curves

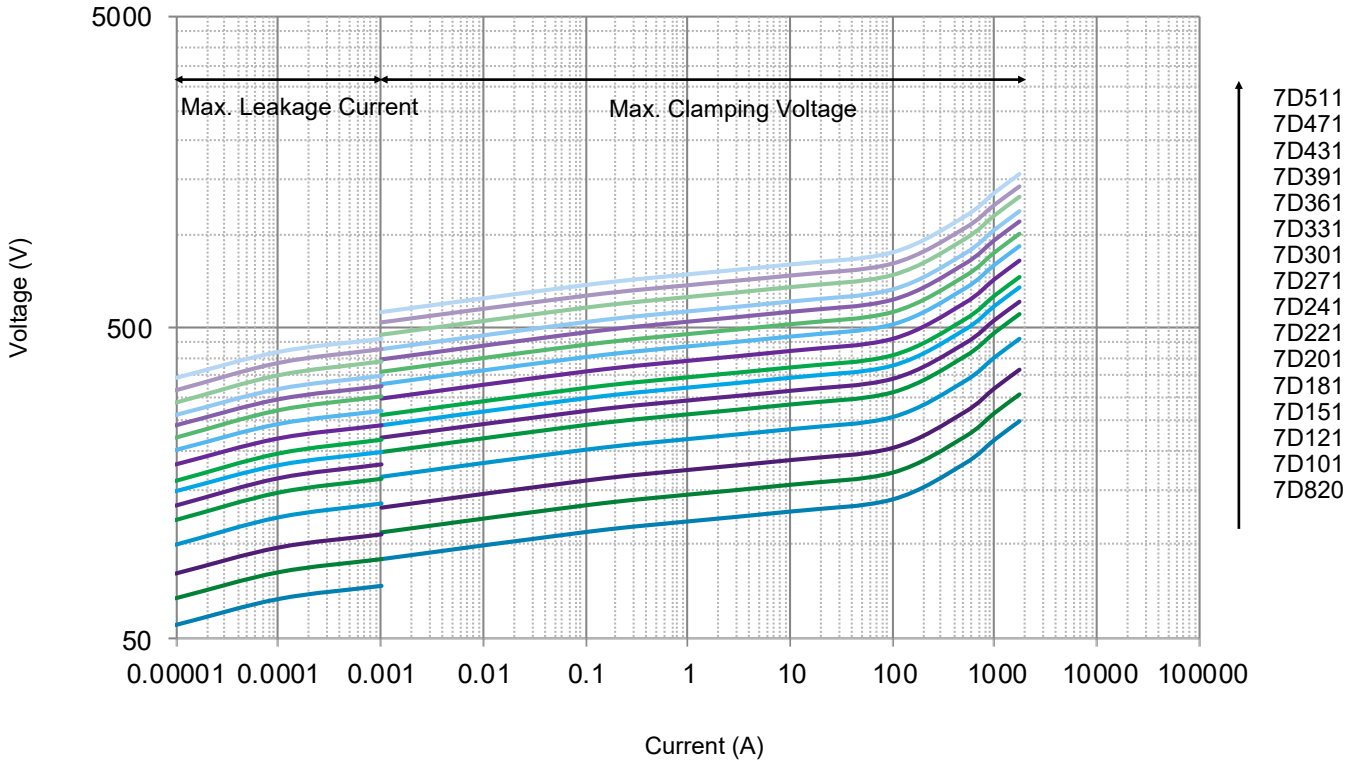

All Rights Reserved by Xiamen SET Electronics Co., Ltd. 2024-2026 V1.1

- Voltage-Current Characteristic Curves

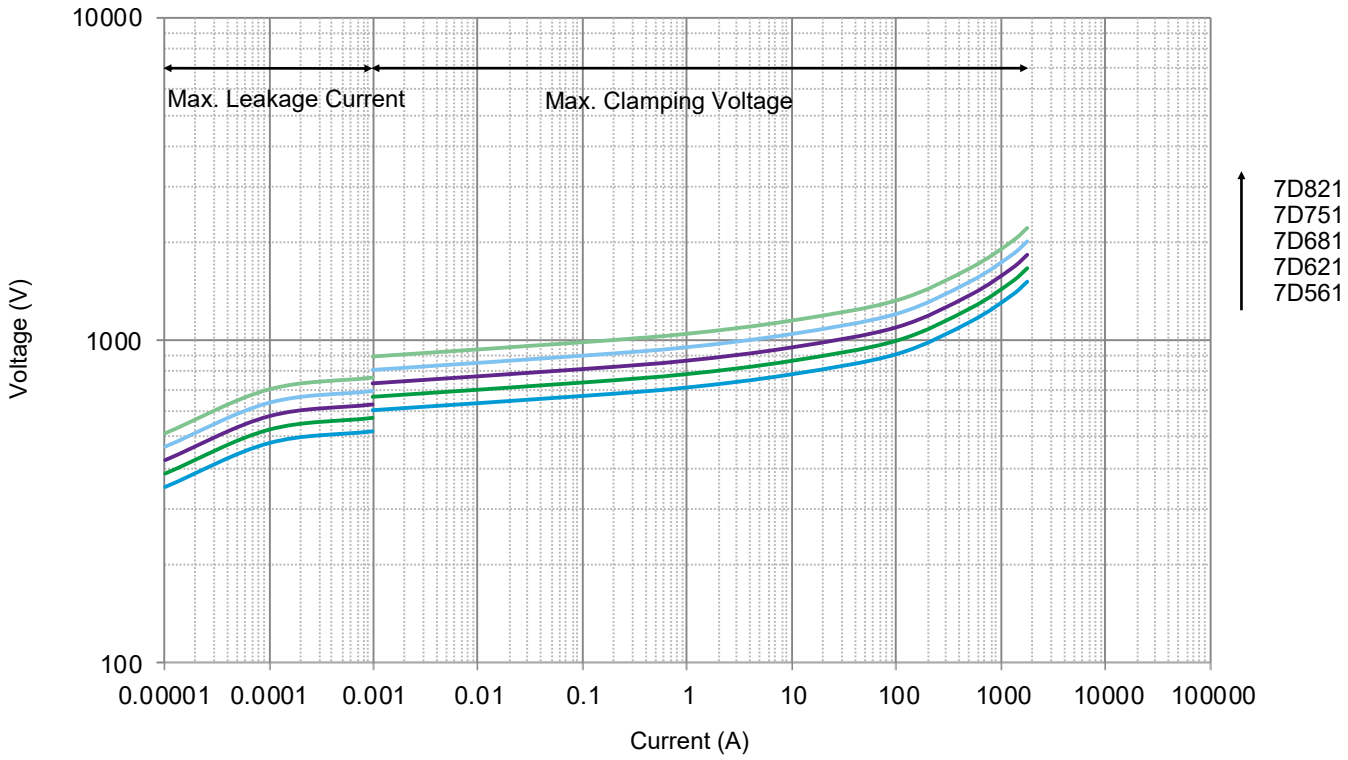

All Rights Reserved by Xiamen SET Electronics Co., Ltd. 2024-2026 V1.1

Packaging Information

- Bulk Packaging (Code: BUL)
- Bulk Packaging Quantity & Weight.

Series	Nominal Varistor Voltage	PE Bag	Box	Carton	G. W / Carton (365 × 265 × 245)
	(V)	(PCS)	(PCS)	(PCS)	(kg)±10%
SFV7D M Series	820 ~ 471	1000	2000	12000	5 ~ 11
	511 ~ 821	800	1600	9600	8 ~ 13

Note:
Other lead length packaging information, please contact SETsafe | SETfuse.

All Dimensions in mm

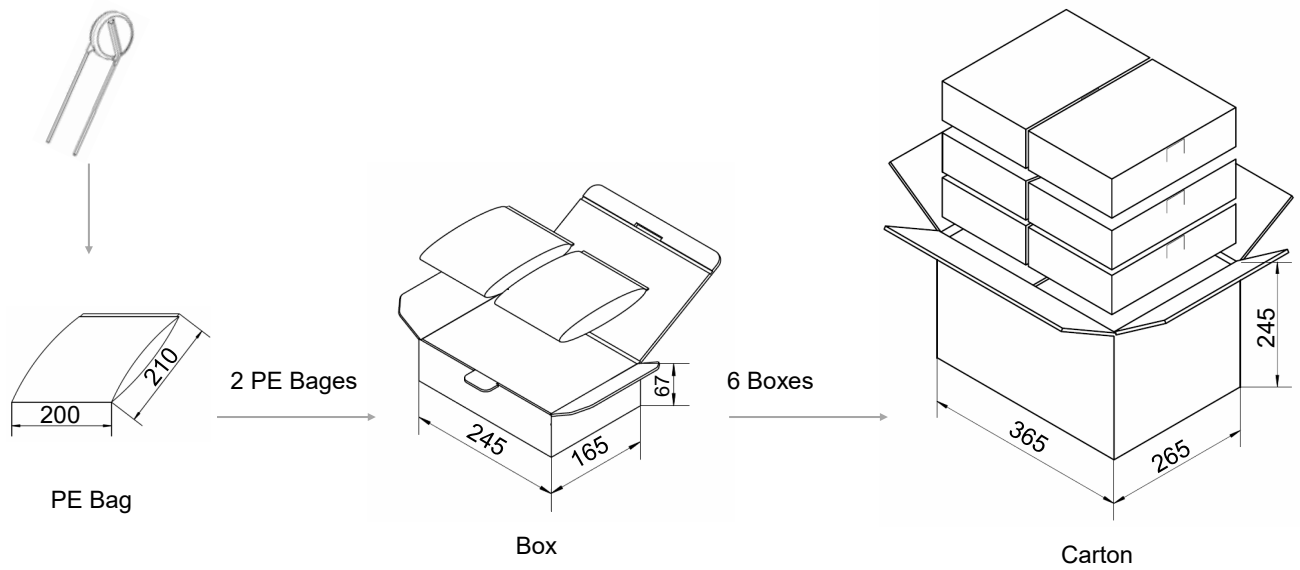

All Rights Reserved by Xiamen SET Electronics Co., Ltd. 2024-2026 V1.1

Packaging Information

- Tape Packaging (Code: 0AB)

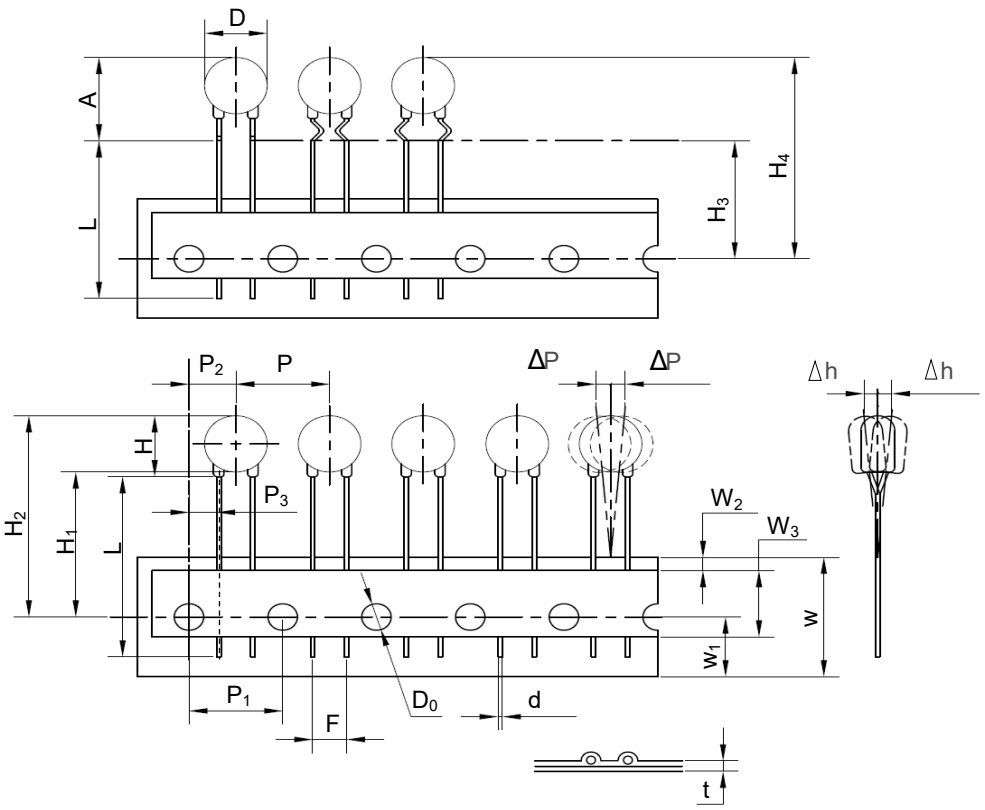

Dimensions (mm)	
P	12.7±1.0
P_1	12.7±0.3
P_2	6.35±1.30
P_3	3.85±1.00
ΔP(max.)	1.0
W	18.0±2.0
W_1	9.0±1.0
W_2(max.)	3.0
W_3	10.0±2.0
H(max.)	12.0
H_1	18.0
H_2(max.)	$32.0^{+2.0}_{-0}$
H_3	18.0
H_4(max.)	$33.0^{+2.0}_{-0}$
Δh(max.)	2.0
t (max.)	0.6
D(max.)	9.0
D_0	4.0±0.2
d	0.60±0.05
A(max.)	12.5
F	5.0±1.0
L(min.)	/

- Tape Packaging Quantity & Weight.

Series	Nominal Varistor Voltage	Box	Carton	G. W / Carton (365 × 265 × 415)
7D	(V)	(PCS)	(PCS)	(kg)±10%
	751 ~ 821	700	4900	6 ~ 7
	511 ~ 681	800	5600	5 ~ 6
	331 ~ 471	1000	7000	4 ~ 6
	820 ~ 301	1200	8400	4 ~ 6

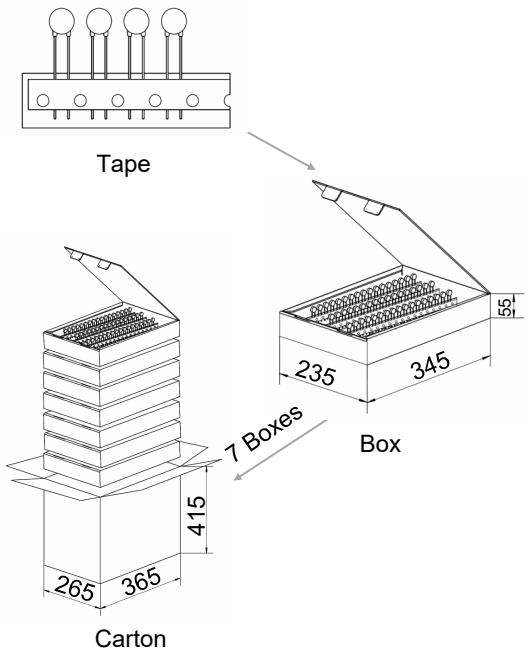

All Rights Reserved by Xiamen SET Electronics Co., Ltd. 2024-2026 V1.1

Packaging Information

- Reel Packaging (Code:0AR)

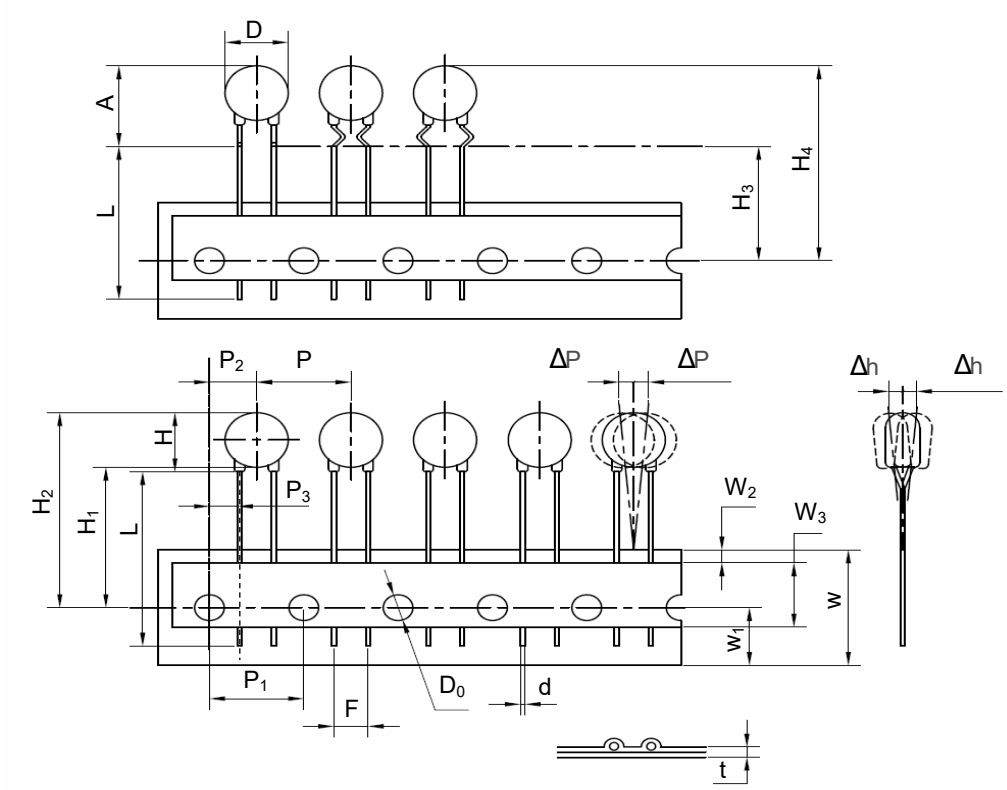

Dimensions (mm)	
P	12.7±1.0
P_1	12.7±0.3
P_2	6.35±1.30
P_3	3.85±1.00
ΔP(max.)	1.0
W	18.0±1.0
W_1	9.0±1.0
W_2(max.)	3.0
W_3	10.0±2.0
H(max.)	12.0
H_1	18.0
H_2(max.)	$32.0^{+2.0}_{-0}$
H_3	18.0
H_4(max.)	$33.0^{+2.0}_{-0}$
Δh(max.)	2.0
t (max.)	0.6
D(max.)	9.0
D_0	4.0±0.2
d	0.60±0.05
A(max.)	12.5
F	5.0±1.0
L(min.)	/

- Reel Packaging Quantity & Weight.

Series	Nominal Varistor Voltage	Box	Carton	G. W / Carton (375 × 335 × 385)
	(V)	(PCS)	(PCS)	(kg)±10%
7D	820 ~ 391	1500	7500	3 ~ 6
	431 ~ 821	1000	5000	4 ~ 7

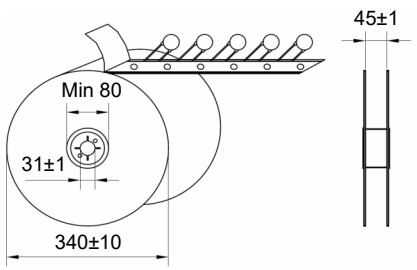

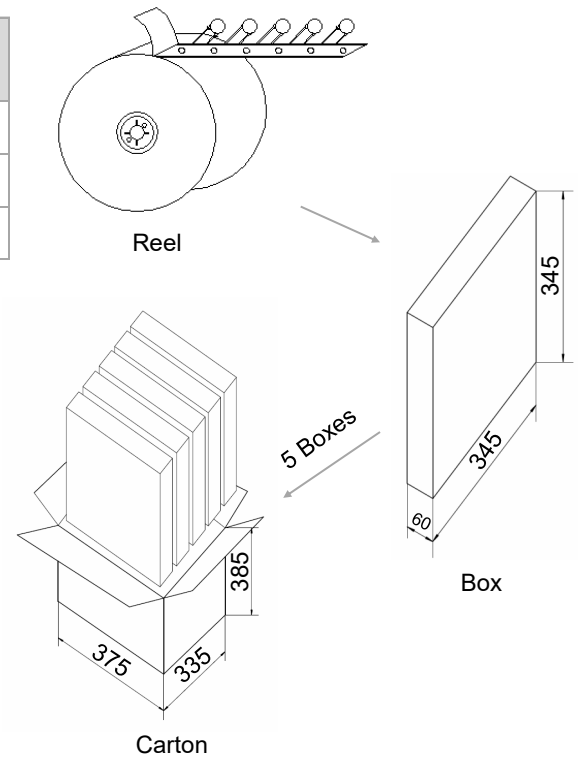

All Rights Reserved by Xiamen SET Electronics Co., Ltd. 2024-2026 V1.1

Dimensions (mm)

Model	L (Min.)	H (Max.)	T (Max.)	D (Max.)	d	F	F_1	A (Max.)
SFV10D820KM	20	15.5	4.4	12.5	0.80±0.05	7.5±0.6	1.2 ~ 2.6	17.5
SFV10D101KM	20	15.5	4.6	12.5	0.80±0.05	7.5±0.6	1.3 ~ 2.8	17.5
SFV10D121KM	20	15.5	4.8	12.5	0.80±0.05	7.5±0.6	1.4 ~ 3.0	17.5
SFV10D151KM	20	15.5	5.1	12.5	0.80±0.05	7.5±0.6	1.6 ~ 3.3	17.5
SFV10D181KM	20	15.5	4.3	12.5	0.80±0.05	7.5±0.6	1.0 ~ 2.6	17.5
SFV10D201KM	20	15.5	4.4	12.5	0.80±0.05	7.5±0.6	1.1 ~ 2.7	17.5
SFV10D221KM	20	15.5	4.5	12.5	0.80±0.05	7.5±0.6	1.2 - 2.8	17.5
SFV10D241KM	20	15.5	4.6	12.5	0.80±0.05	7.5±0.6	1.3 ~ 2.9	17.5
SFV10D271KM	20	15.5	4.8	12.5	0.80±0.05	7.5±0.6	1.4 ~ 3.1	17.5
SFV10D301KM	20	15.5	4.9	12.5	0.80±0.05	7.5±0.6	1.5 ~ 3.2	17.5
SFV10D331KM	20	15.5	5.1	12.5	0.80±0.05	7.5±0.6	1.6 ~ 3.3	17.5
SFV10D361KM	20	15.5	5.2	12.5	0.80±0.05	7.5±0.6	1.7 ~ 3.5	17.5
SFV10D391KM	20	15.5	5.4	12.5	0.80±0.05	7.5±0.6	1.8 ~ 3.6	17.5
SFV10D431KM	20	15.5	5.6	12.5	0.80±0.05	7.5±0.6	1.8 ~ 3.8	17.5
SFV10D471KM	20	15.5	5.8	12.5	0.80±0.05	7.5±0.6	2.0 ~ 4.0	17.5
SFV10D511KM	20	15.5	6.0	12.5	0.80±0.05	7.5±0.6	2.2 ~ 4.2	17.5
SFV10D561KM	20	15.5	6.2	12.5	0.80±0.05	7.5±0.6	2.4 ~ 4.4	17.5
SFV10D621KM	20	15.5	6.5	12.5	0.80±0.05	7.5±0.6	2.7 ~ 4.7	17.5
SFV10D681KM	20	15.5	6.8	12.5	0.80±0.05	7.5±0.6	3.0 ~ 5.0	17.5
SFV10D751KM	20	15.5	7.2	12.5	0.80±0.05	7.5±0.6	3.3 ~ 5.3	17.5
SFV10D821KM	20	15.5	7.5	12.5	0.80±0.05	7.5±0.6	3.6 ~ 5.6	17.5
SFV10D911KM	20	15.5	8.0	12.5	0.80±0.05	7.5±0.6	4.0 ~ 6.0	17.5
SFV10D102KM	20	15.5	8.4	12.5	0.80±0.05	7.5±0.6	4.5 ~ 6.5	17.5
SFV10D112KM	20	15.5	8.9	12.5	0.80±0.05	7.5±0.6	4.9 ~ 6.9	17.5
SFV10D122KM	20	15.5	9.4	12.5	0.80±0.05	7.5±0.6	5.4 ~ 7.4	17.5

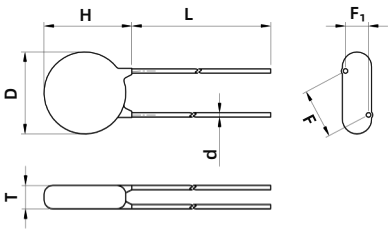

Straight Lead (A)

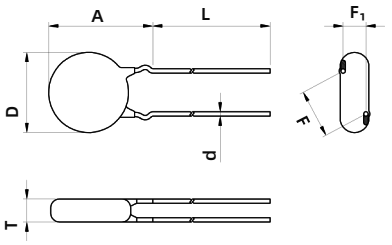

Outward Crimp (C)

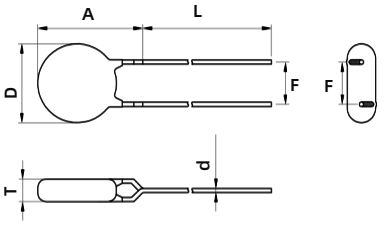

Inline Crimp (D)

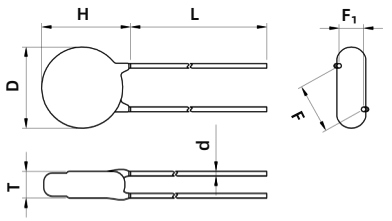

Little Straight Lead (I)

Note:
The above data is for reference only.

All Rights Reserved by Xiamen SET Electronics Co., Ltd. 2024-2026 V1.1

Specification

Model	Surge Level	Max. Continuous Operating Voltage		Varistor Voltage @1 mA DC		Clamping Voltage (Max.)		Max. Peak Current (1 time, 8/20 μs)	Max. Energy (10/1000 μs)	Typical Capacitance (For reference only) @1 kHz	Agency Information			
		VAC	VDC	Min.	Max.	V_C	I_P	S		(pF)	UL	cUL	TUV	CQC
		(V)	(V)	(V)	(V)	(V)	(A)	(kA)	(J)					
SFV10D820KM	S	50	65	74	90	135	25	2.5	12	1200	●	●	●	●
SFV10D101KM	S	60	85	90	110	165	25	2.5	15	1000	●	●	●	●
SFV10D121KM	S	75	100	108	132	200	25	2.5	18	830	●	●	●	●
SFV10D151KM	S	95	125	135	165	250	25	2.5	22	670	●	●	●	●
SFV10D181KM	S	115	150	162	198	300	25	2.5	27	560	●	●	●	●
SFV10D201KM	S	130	170	180	220	340	25	2.5	30	500	●	●	●	●
SFV10D221KM	S	140	180	198	242	360	25	2.5	32	450	●	●	●	●
SFV10D241KM	S	150	200	216	264	395	25	2.5	35	420	●	●	●	●
SFV10D271KM	S	175	225	243	297	455	25	2.5	40	370	●	●	●	●
SFV10D301KM	S	190	250	270	330	500	25	2.5	40	330	●	●	●	●
SFV10D331KM	S	210	275	297	363	550	25	2.5	43	300	●	●	●	●
SFV10D361KM	S	230	300	324	396	595	25	2.5	47	280	●	●	●	●
SFV10D391KM	S	250	320	351	429	650	25	2.5	60	260	●	●	●	●
SFV10D431KM	S	275	350	387	473	710	25	2.5	65	230	●	●	●	●
SFV10D471KM	S	300	385	423	517	775	25	2.5	70	210	●	●	●	●
SFV10D511KM	S	320	415	459	561	845	25	2.5	70	200	●	●	●	●
SFV10D561KM	S	350	460	504	616	925	25	2.5	70	180	●	●	●	●
SFV10D621KM	S	385	505	558	682	1025	25	2.5	70	160	●	●	●	●
SFV10D681KM	S	420	560	612	748	1120	25	2.5	70	150	●	●	●	●
SFV10D751KM	S	460	615	675	825	1240	25	2.5	75	130	●	●	●	●
SFV10D821KM	S	510	670	738	902	1355	25	2.5	85	120	●	●	●	●
SFV10D911KM	S	550	745	819	1001	1500	25	2.5	93	110	●	●	●	●
SFV10D102KM	S	625	825	900	1100	1650	25	2.5	102	100	●	●	●	●
SFV10D112KM	S	680	895	990	1210	1815	25	2.5	115	90	●	●	●	●
SFV10D122KM	S	750	990	1080	1320	1980	25	2.5	125	55	●	●	●	●

●: Approved ○: Unauthorized ● RoHS & REACH Compliant

All Rights Reserved by Xiamen SET Electronics Co., Ltd. 2024-2026 V1.1

Specification

Model	Surge Level	Max. Continuous Operating Voltage		Varistor Voltage @1 mA DC		Clamping Voltage (Max.)		Max. Peak Current (1 time, 8/20 μs)	Max. Energy (10/1000 μs)	Typical Capacitance (For reference only) @1 kHz	Agency Information			
		VAC	VDC	Min.	Max.	V_C	I_P	K		(pF)	UL	cUL	TUV	CQC
		(V)	(V)	(V)	(V)	(V)	(A)	(kA)	(J)					
SFV10D820KM	K	50	65	74	90	135	25	3.5	14	1200	●	●	●	●
SFV10D101KM	K	60	85	90	110	165	25	3.5	17	1000	●	●	●	●
SFV10D121KM	K	75	100	108	132	200	25	3.5	20	830	●	●	●	●
SFV10D151KM	K	95	125	135	165	250	25	3.5	25	670	●	●	●	●
SFV10D181KM	K	115	150	162	198	300	25	3.5	30	560	●	●	●	●
SFV10D201KM	K	130	170	180	220	340	25	3.5	35	500	●	●	●	●
SFV10D221KM	K	140	180	198	242	360	25	3.5	39	450	●	●	●	●
SFV10D241KM	K	150	200	216	264	395	25	3.5	42	420	●	●	●	●
SFV10D271KM	K	175	225	243	297	455	25	3.5	49	370	●	●	●	●
SFV10D301KM	K	190	250	270	330	500	25	3.5	54	330	●	●	●	●
SFV10D331KM	K	210	275	297	363	550	25	3.5	58	300	●	●	●	●
SFV10D361KM	K	230	300	324	396	595	25	3.5	65	280	●	●	●	●
SFV10D391KM	K	250	320	351	429	650	25	3.5	70	260	●	●	●	●
SFV10D431KM	K	275	350	387	473	710	25	3.5	80	230	●	●	●	●
SFV10D471KM	K	300	385	423	517	775	25	3.5	85	210	●	●	●	●
SFV10D511KM	K	320	415	459	561	845	25	3.5	90	200	●	●	●	●
SFV10D561KM	K	350	460	504	616	925	25	3.5	92	180	●	●	●	●
SFV10D621KM	K	385	505	558	682	1025	25	3.5	95	160	●	●	●	●
SFV10D681KM	K	420	560	612	748	1120	25	3.5	98	150	●	●	●	●
SFV10D751KM	K	460	615	675	825	1240	25	3.5	100	130	●	●	●	●
SFV10D821KM	K	510	670	738	902	1355	25	3.5	110	120	●	●	●	●
SFV10D911KM	K	550	745	819	1001	1500	25	3.5	130	110	●	●	●	●
SFV10D102KM	K	625	825	900	1100	1650	25	3.5	140	100	●	●	●	●
SFV10D112KM	K	680	895	990	1210	1815	25	3.5	155	90	●	●	●	●
SFV10D122KM	K	750	990	1080	1320	1980	25	3.5	170	55	●	●	●	●

●: Approved ○: Unauthorized ● RoHS & REACH Compliant

All Rights Reserved by Xiamen SET Electronics Co., Ltd. 2024-2026 V1.1

Specification

Model	Surge Level	Max. Continuous Operating Voltage		Varistor Voltage @1 mA DC		Clamping Voltage (Max.)		Pulse Impact Performance (40 times) (1.2/50 μs & 8/20 μs)	Max. Energy (10/1000 μs)	Typical Capacitance (For reference only) @1 kHz	Agency Information			
		VAC	VDC	Min.	Max.	V_C	I_P	Q		(pF)				
		(V)	(V)	(V)	(V)	(V)	(A)	(kV)	(J)		UL	cUL	TUV	CQC
SFV10D201KM	Q	130	170	180	220	340	25	4.5	35	500	●	●	●	●
SFV10D221KM	Q	140	180	198	242	360	25	4.5	39	450	●	●	●	●
SFV10D241KM	Q	150	200	216	264	395	25	4.5	42	420	●	●	●	●
SFV10D271KM	Q	175	225	243	297	455	25	4.5	49	370	●	●	●	●
SFV10D301KM	Q	190	250	270	330	500	25	4.5	54	330	●	●	●	●
SFV10D331KM	Q	210	275	297	363	550	25	4.5	58	300	●	●	●	●
SFV10D361KM	Q	230	300	324	396	595	25	4.5	65	280	●	●	●	●
SFV10D391KM	Q	250	320	351	429	650	25	4.5	70	260	●	●	●	●
SFV10D431KM	Q	275	350	387	473	710	25	4.5	80	230	●	●	●	●
SFV10D471KM	Q	300	385	423	517	775	25	4.5	85	210	●	●	●	●
SFV10D511KM	Q	320	415	459	561	845	25	4.5	90	200	●	●	●	●
SFV10D561KM	Q	350	460	504	616	925	25	4.5	92	180	●	●	●	●
SFV10D621KM	Q	385	505	558	682	1025	25	4.5	95	160	●	●	●	●
SFV10D681KM	Q	420	560	612	748	1120	25	4.5	98	150	●	●	●	●

●: Approved ○: Unauthorized ● RoHS & REACH Compliant

All Rights Reserved by Xiamen SET Electronics Co., Ltd. 2024-2026 V1.1

Performance Curve (For reference only)

- Max. Peak Current Derating Curves

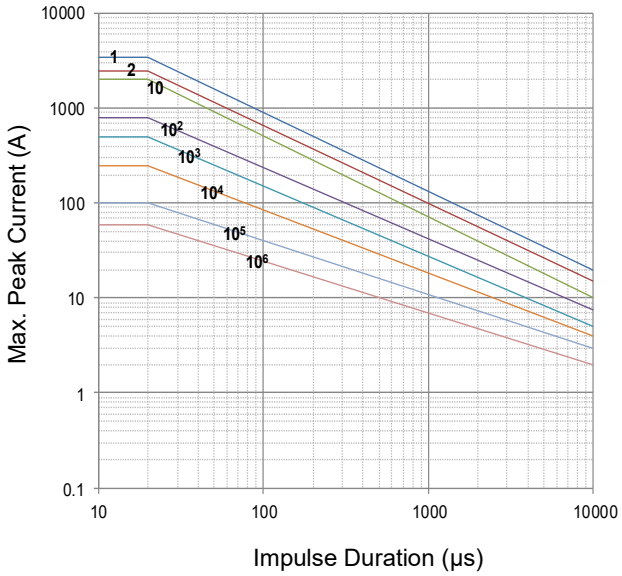

SFV10D820KM to SFV10D122KM

Note: 1, 2, 10, 10^2, 10^3, 10^4, 10^5, 10^6 Stand for Repetitions.

- Voltage-Current Characteristic Curves

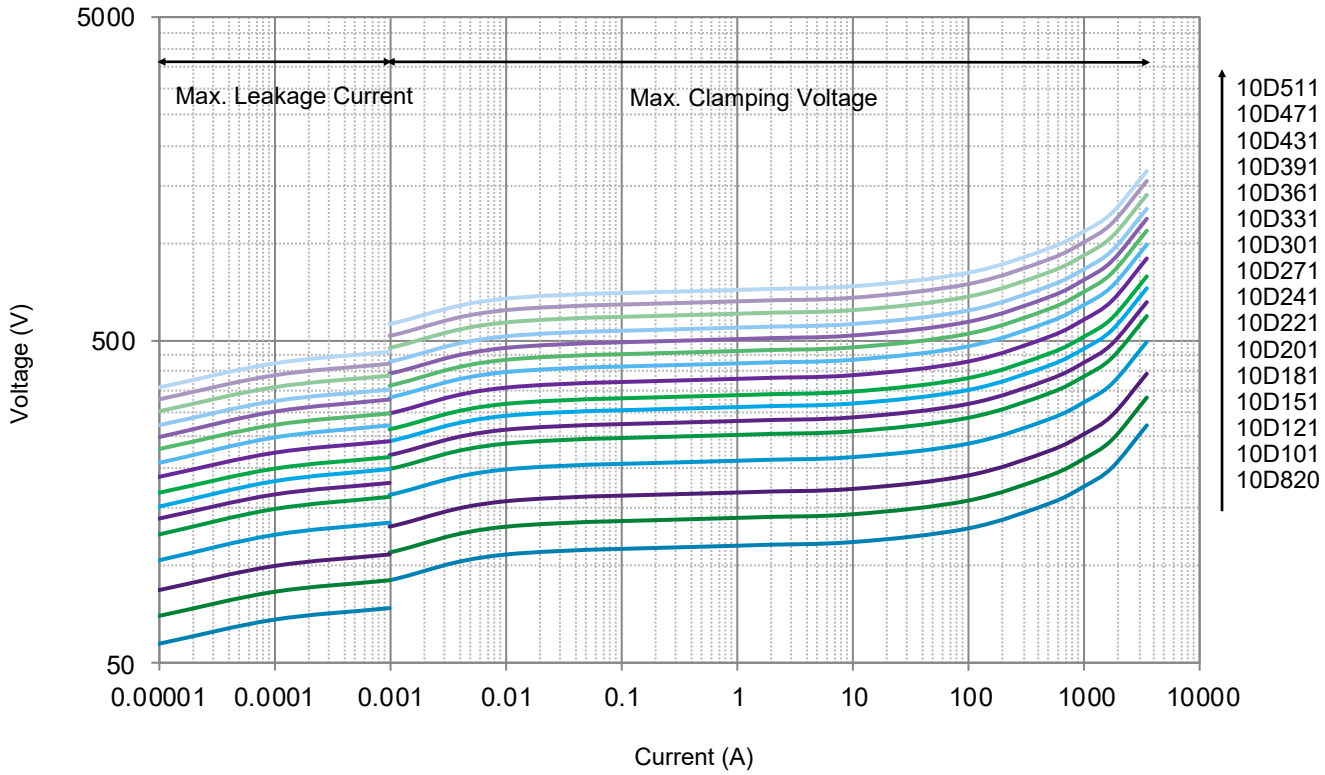

All Rights Reserved by Xiamen SET Electronics Co., Ltd. 2024-2026 V1.1

- Voltage-Current Characteristic Curves

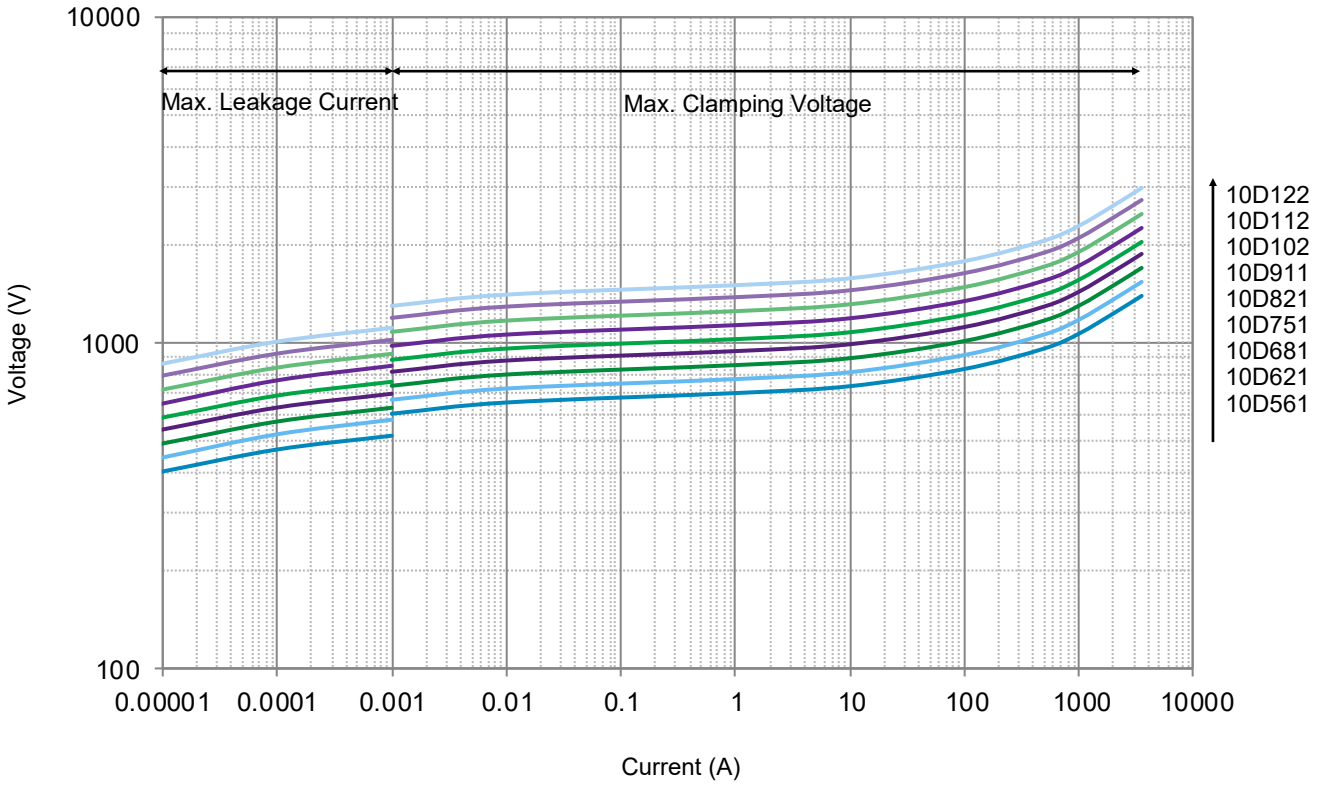

All Rights Reserved by Xiamen SET Electronics Co., Ltd. 2024-2026 V1.1

Packaging Information

- Bulk Packaging (Code: BUL)
- Bulk Packaging Quantity & Weight.

Series	Nominal Varistor Voltage	PE Bag	Box	Carton	G. W / Carton (365 × 265 × 245)
	(V)	(PCS)	(PCS)	(PCS)	(kg)±10%
SFV10D M Series	820 ~ 821	500	1000	6000	6 ~ 16
	911 ~ 122	400	800	4800	14 ~ 18

Note:
Other lead length packaging information, please contact SETsafe | SETfuse.

All Dimensions in mm

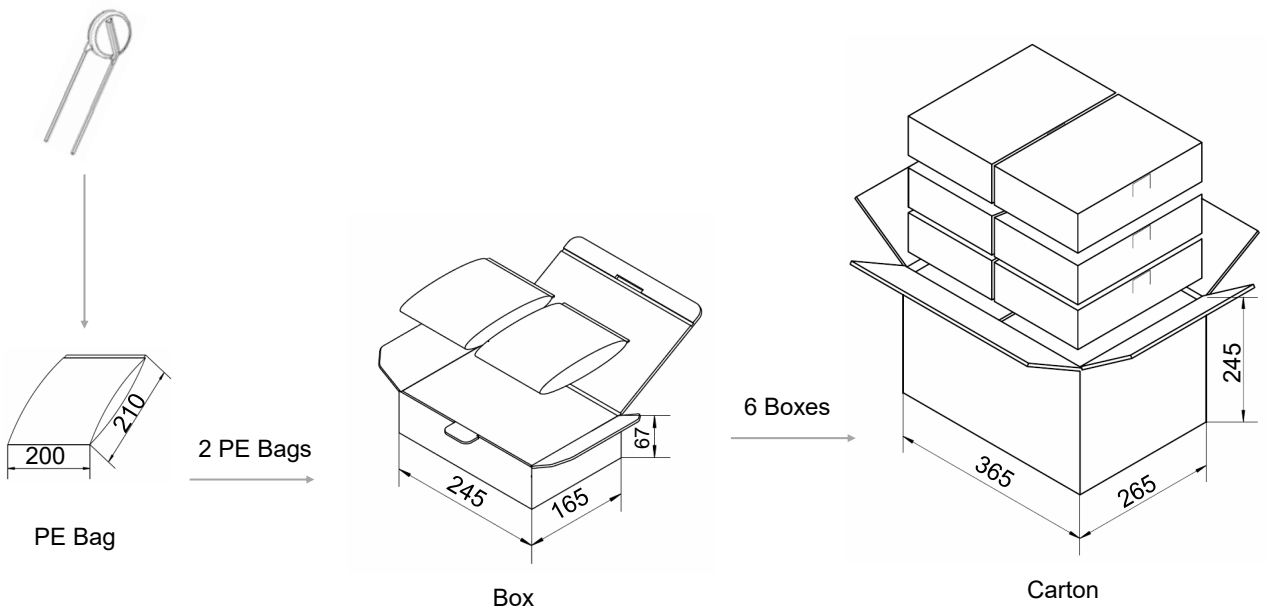

All Rights Reserved by Xiamen SET Electronics Co., Ltd. 2024-2026 V1.1

Packaging Information

- Tape Packaging (Code: 0AB)

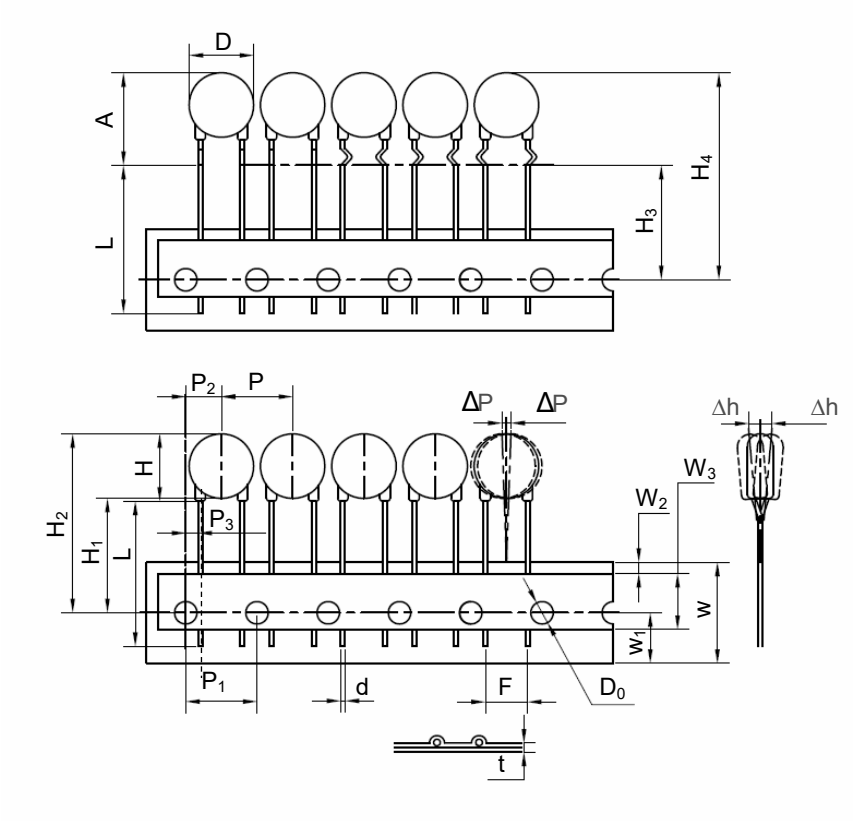

Dimensions (mm)	
P	12.7±1.0
P_1	12.7±0.3
P_2	6.35±1.30
P_3	2.6±0.7
ΔP(max.)	1.0
W	18.0±1.0
W_1	9.0±1.0
W_2(max.)	3.0
W_3	10.0±2.0
H(max.)	15.5
H_1	18.0
H_2(max.)	$36.0^{+2.0}_{-0}$
H_3	18.0
H_4(max.)	$38.0^{+2.0}_{-0}$
Δh(max.)	2.0
t (max.)	0.6
D(max.)	12.5
D_0	4.0±0.2
d	0.80±0.05
A(max.)	17.5
F	7.5±1.0
L(min.)	/

- Tape Packaging Quantity & Weight.

Series	Nominal Varistor Voltage	Box	Carton	G. W / Carton (365 × 265 × 415)
	(V)	(PCS)	(PCS)	(kg)±10%
10D	112 ~ 122	550	3850	12 ~ 13
	911 ~ 102	600	4200	11 ~ 13
	751 ~ 821	700	4900	11 ~ 13
	471 ~ 681	800	5600	9 ~ 13
	391 ~ 431	1000	7000	10 ~ 11
	331 ~ 361	1100	7700	10 ~ 11
	271 ~ 301	1200	8400	10 ~ 11
	151			
	180 ~ 241	1300	9100	9 ~ 11
	820 ~ 121			8 ~ 10

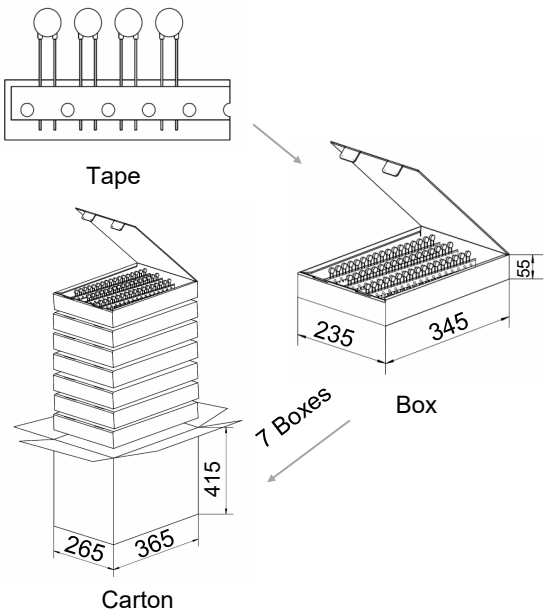

All Rights Reserved by Xiamen SET Electronics Co., Ltd. 2024-2026 V1.1

Packaging Information

- Tape Packaging (Code: 1AB)

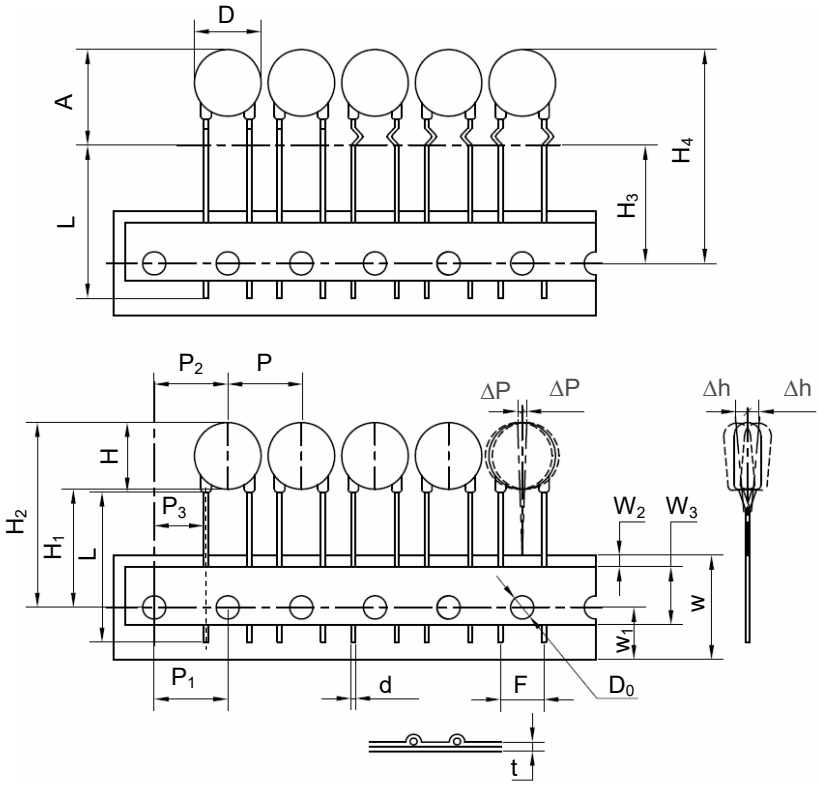

Dimensions (mm)	
P	12.7±1.0
P_1	12.7±0.3
P_2	12.7±1.30
P_3	8.95±0.7
ΔP(max.)	1.0
W	18.0±1.0
W_1	9.0±1.0
W_2(max.)	3.0
W_3	10.0±2.0
H(max.)	15.5
H_1	18.0
H_2(max.)	$36.0^{+2.0}_{-0}$
H_3	18.0
H_4(max.)	$38.0^{+2.0}_{-0}$
Δh(max.)	2.0
t (max.)	0.6
D(max.)	12.5
D_0	4.0±0.2
d	0.80±0.05
A(max.)	17.5
F	7.5±1.0
L(min.)	/

- Tape Packaging Quantity & Weight.

Series	Nominal Varistor Voltage	Box	Carton	G. W / Carton (365 × 265 × 415)
	(V)	(PCS)	(PCS)	(kg)±10%
10D	112 ~ 122	550	3850	12 ~ 13
	911 ~ 102	600	4200	11 ~ 13
	751 ~ 821	700	4900	11 ~ 13
	471 ~ 681	800	5600	9 ~ 13
	391 ~ 431	1000	7000	10 ~ 11
	331 ~ 361	1100	7700	10 ~ 11
	271 ~ 301	1200	8400	10 ~ 11
	151			
	180 ~ 241	1300	9100	9 ~ 11
	820 ~ 121			8 ~ 10

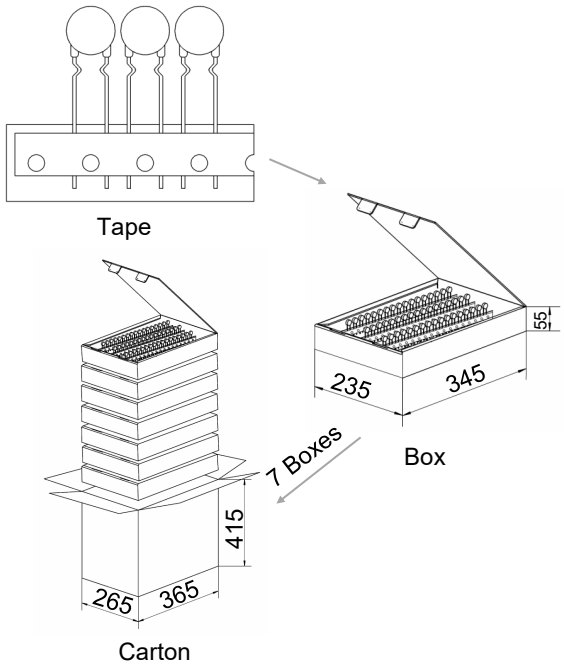

All Rights Reserved by Xiamen SET Electronics Co., Ltd. 2024-2026 V1.1

Packaging Information

- Tape Packaging (Code: 0EB)

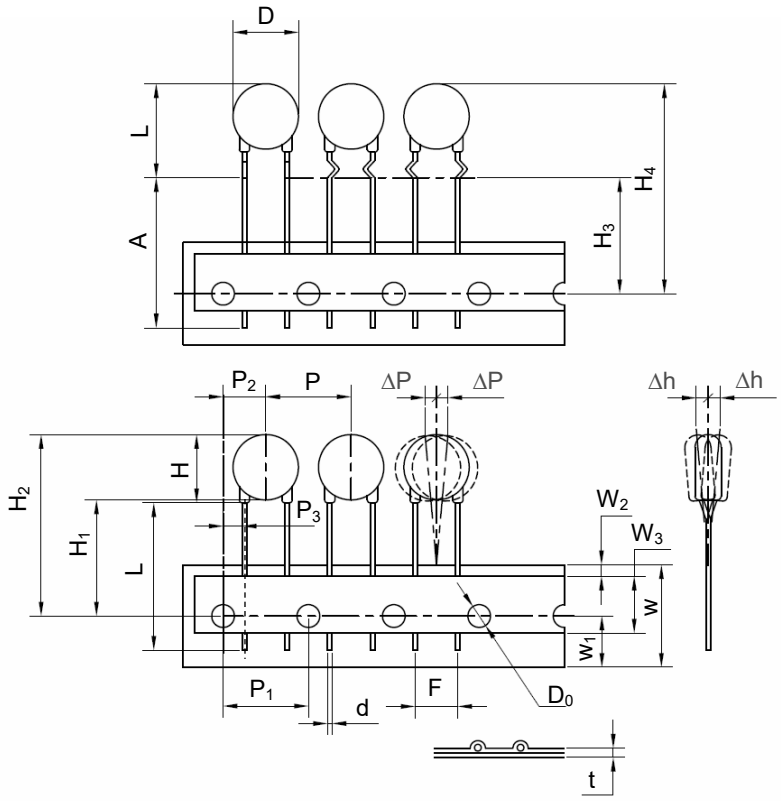

Dimensions (mm)	
P	15.0±1.0
P_1	15.0±0.3
P_2	7.5±1.3
P_3	3.75±1.0
ΔP(max.)	1.0
W	18.0±1.0
W_1	9.0±1.0
W_2(max.)	3.0
W_3	10.0±2.0
H(max.)	15.5
H_1	18.0
H_2(max.)	$36.0^{+2.0}_{-0}$
H_3	18.0
H_4(max.)	$38.0^{+2.0}_{-0}$
Δh(max.)	2.0
t (max.)	0.6
D(max.)	12.5
D_0	4.0±0.2
d	0.80±0.05
A(max.)	17.5
F	7.5±1.0
L(min.)	/

- Tape Packaging Quantity & Weight.

Series	Nominal Varistor Voltage	Box	Carton	G. W / Carton (365 × 265 × 415)
10D	(V)	(PCS)	(PCS)	(kg)±10%
	911 ~ 122	500	3500	9 ~ 12
	751 ~ 821	600	4200	10 ~ 11
	621 ~ 681	700	4900	10 ~ 11
	431 ~ 561	800	5600	8 ~ 11
	271 ~ 391	1000	7000	8 ~ 10
	151			9
	201 ~ 241	1100	7700	8 ~ 9
	121			
	181	1200	8400	7 ~ 8
	820 ~ 101			

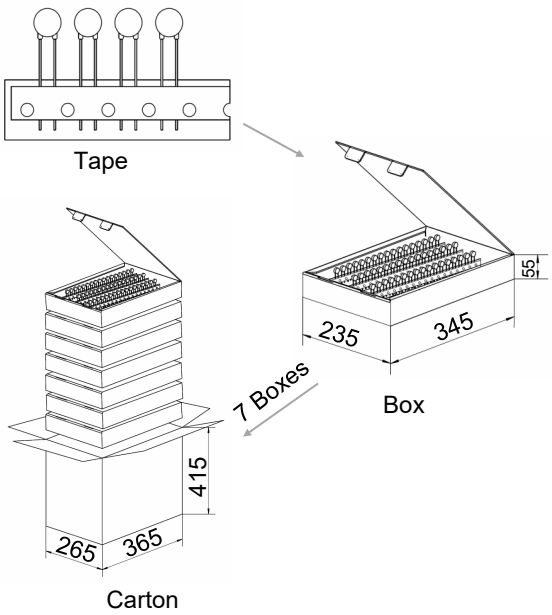

All Rights Reserved by Xiamen SET Electronics Co., Ltd. 2024-2026 V1.1

Dimensions (mm)

Model	L (Min.)	H (Max.)	T (Max.)	D (Max.)	d	F	F_1	A (Max.)
SFV14D820KM	20	18.5	4.4	16.5	0.80±0.05	7.5±0.6	1.2 ~ 2.6	21.5
SFV14D101KM	20	18.5	4.6	16.5	0.80±0.05	7.5±0.6	1.3 ~ 2.8	21.5
SFV14D121KM	20	18.5	4.8	16.5	0.80±0.05	7.5±0.6	1.4 ~ 3.0	21.5
SFV14D151KM	20	18.5	5.1	16.5	0.80±0.05	7.5±0.6	1.6 ~ 3.3	21.5
SFV14D181KM	20	18.5	4.3	16.5	0.80±0.05	7.5±0.6	1.0 ~ 2.6	21.5
SFV14D201KM	20	18.5	4.4	16.5	0.80±0.05	7.5±0.6	1.1 ~ 2.7	21.5
SFV14D221KM	20	18.5	4.5	16.5	0.80±0.05	7.5±0.6	1.2 ~ 2.8	21.5
SFV14D241KM	20	18.5	4.6	16.5	0.80±0.05	7.5±0.6	1.3 ~ 2.9	21.5
SFV14D271KM	20	18.5	4.8	16.5	0.80±0.05	7.5±0.6	1.4 ~ 3.1	21.5
SFV14D301KM	20	18.5	4.9	16.5	0.80±0.05	7.5±0.6	1.5 ~ 3.2	21.5
SFV14D331KM	20	18.5	5.1	16.5	0.80±0.05	7.5±0.6	1.6 ~ 3.3	21.5
SFV14D361KM	20	18.5	5.2	16.5	0.80±0.05	7.5±0.6	1.7 ~ 3.5	21.5
SFV14D391KM	20	18.5	5.4	16.5	0.80±0.05	7.5±0.6	1.8 ~ 3.6	21.5
SFV14D431KM	20	18.5	5.6	16.5	0.80±0.05	7.5±0.6	1.8 ~ 3.8	21.5
SFV14D471KM	20	18.5	5.8	16.5	0.80±0.05	7.5±0.6	2.0 ~ 4.0	21.5
SFV14D511KM	20	18.5	6.0	16.5	0.80±0.05	7.5±0.6	2.2 ~ 4.2	21.5
SFV14D561KM	20	18.5	6.2	16.5	0.80±0.05	7.5±0.6	2.4 ~ 4.4	21.5
SFV14D621KM	20	18.5	6.1	16.5	0.80±0.05	7.5±0.6	2.7 ~ 4.7	21.5
SFV14D681KM	20	18.5	6.8	16.5	0.80±0.05	7.5±0.6	3.0 ~ 5.0	21.5
SFV14D751KM	20	18.5	7.2	16.5	0.80±0.05	7.5±0.6	3.3 ~ 5.3	21.5
SFV14D821KM	20	18.5	7.6	16.5	0.80±0.05	7.5±0.6	3.6 ~ 5.6	21.5
SFV14D911KM	20	18.5	8.0	16.5	0.80±0.05	7.5±0.6	4.0 ~ 6.0	21.5
SFV14D102KM	20	18.5	8.4	16.5	0.80±0.05	7.5±0.6	4.5 ~ 6.5	21.5
SFV14D112KM	20	18.5	8.9	16.5	0.80±0.05	7.5±0.6	4.9 ~ 6.9	21.5
SFV14D122KM	20	18.5	9.4	16.5	0.80±0.05	7.5±0.6	5.4 ~ 7.4	21.5

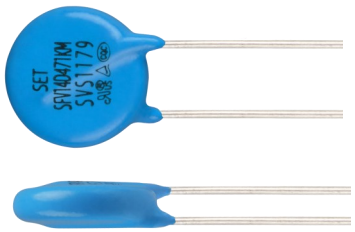

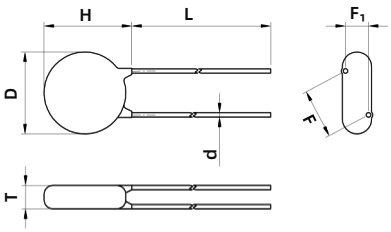

Straight Lead (A)

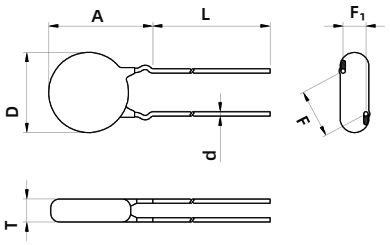

Outward Crimp (C)

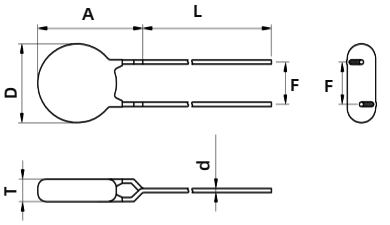

Inline Crimp (D)

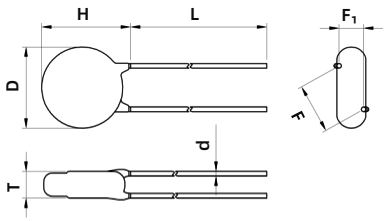

Little Straight Lead (I)

Note:
The above data is for reference only.

All Rights Reserved by Xiamen SET Electronics Co., Ltd. 2024-2026 V1.1

Specification

Model	Surge Level	Max. Continuous Operating Voltage		Varistor Voltage @1 mA DC		Clamping Voltage (Max.)		Max. Peak Current (1 time, 8/20 μs)	Max. Energy (10/1000 μs)	Typical Capacitance (For reference only) @1 kHz	Agency Information			
		VAC	VDC	Min.	Max.	V_C	I_P	S		(pF)	UL	cUL	TUV	CQC
		(V)	(V)	(V)	(V)	(V)	(A)	(kA)	(J)					
SFV14D820KM	S	50	65	74	90	135	50	4.5	22	2400	●	●	●	●
SFV14D101KM	S	60	85	90	110	165	50	4.5	28	2000	●	●	●	●
SFV14D121KM	S	75	100	108	132	200	50	4.5	32	1700	●	●	●	●
SFV14D151KM	S	95	125	135	165	250	50	4.5	40	1300	●	●	●	●
SFV14D181KM	S	115	150	162	198	300	50	4.5	50	1100	●	●	●	●
SFV14D201KM	S	130	170	180	220	340	50	4.5	57	1000	●	●	●	●
SFV14D221KM	S	140	180	198	242	360	50	4.5	60	900	●	●	●	●
SFV14D241KM	S	150	200	216	264	395	50	4.5	63	830	●	●	●	●
SFV14D271KM	S	175	225	243	297	455	50	4.5	70	740	●	●	●	●
SFV14D301KM	S	190	250	270	330	500	50	4.5	77	670	●	●	●	●
SFV14D331KM	S	210	275	297	363	550	50	4.5	85	610	●	●	●	●
SFV14D361KM	S	230	300	324	396	595	50	4.5	93	560	●	●	●	●
SFV14D391KM	S	250	320	351	429	650	50	4.5	100	510	●	●	●	●
SFV14D431KM	S	275	350	387	473	710	50	4.5	115	460	●	●	●	●
SFV14D471KM	S	300	385	423	517	775	50	4.5	125	430	●	●	●	●
SFV14D511KM	S	320	415	459	561	845	50	4.5	125	390	●	●	●	●
SFV14D561KM	S	350	460	504	616	925	50	4.5	125	360	●	●	●	●
SFV14D621KM	S	385	505	558	682	1025	50	4.5	125	320	●	●	●	●
SFV14D681KM	S	420	560	612	748	1120	50	4.5	130	290	●	●	●	●
SFV14D751KM	S	460	615	675	825	1240	50	4.5	143	270	●	●	●	●
SFV14D821KM	S	510	670	738	902	1355	50	4.5	157	240	●	●	●	●
SFV14D911KM	S	550	745	819	1001	1500	50	4.5	175	220	●	●	●	●
SFV14D102KM	S	625	825	900	1100	1650	50	4.5	190	200	●	●	●	●
SFV14D112KM	S	680	895	990	1210	1815	50	4.5	213	180	●	●	●	●
SFV14D122KM	S	750	990	1080	1320	1980	50	4.5	213	150	●	●	●	●

●: Approved ○: Unauthorized ● RoHS & REACH Compliant

All Rights Reserved by Xiamen SET Electronics Co., Ltd. 2024-2026 V1.1

Specification

Model	Surge Level	Max. Continuous Operating Voltage		Varistor Voltage @1 mA DC		Clamping Voltage (Max.)		Max. Peak Current (1 time, 8/20 μs)	Max. Energy (10/1000 μs)	Typical Capacitance (For reference only) @1 kHz	Agency Information			
		VAC	VDC	Min.	Max.	V_C	I_P	K		(pF)	UL	cUL	TUV	CQC
		(V)	(V)	(V)	(V)	(V)	(A)	(kA)	(J)					
SFV14D820KM	K	50	65	74	90	135	50	6	28	2400	●	●	●	●
SFV14D101KM	K	60	85	90	110	165	50	6	35	2000	●	●	●	●
SFV14D121KM	K	75	100	108	132	200	50	6	42	1700	●	●	●	●
SFV14D151KM	K	95	125	135	165	250	50	6	53	1300	●	●	●	●
SFV14D181KM	K	115	150	162	198	300	50	6	60	1100	●	●	●	●
SFV14D201KM	K	130	170	180	220	340	50	6	70	1000	●	●	●	●
SFV14D221KM	K	140	180	198	242	360	50	6	78	900	●	●	●	●
SFV14D241KM	K	150	200	216	264	395	50	6	84	830	●	●	●	●
SFV14D271KM	K	175	225	243	297	455	50	6	99	740	●	●	●	●
SFV14D301KM	K	190	250	270	330	500	50	6	108	670	●	●	●	●
SFV14D331KM	K	210	275	297	363	550	50	6	115	610	●	●	●	●
SFV14D361KM	K	230	300	324	396	595	50	6	130	560	●	●	●	●
SFV14D391KM	K	250	320	351	429	650	50	6	140	510	●	●	●	●
SFV14D431KM	K	275	350	387	473	710	50	6	155	460	●	●	●	●
SFV14D471KM	K	300	385	423	517	775	50	6	175	430	●	●	●	●
SFV14D511KM	K	320	415	459	561	845	50	6	180	390	●	●	●	●
SFV14D561KM	K	350	460	504	616	925	50	6	185	360	●	●	●	●
SFV14D621KM	K	385	505	558	682	1025	50	6	190	320	●	●	●	●
SFV14D681KM	K	420	560	612	748	1120	50	6	200	290	●	●	●	●
SFV14D751KM	K	460	615	675	825	1240	50	6	210	270	●	●	●	●
SFV14D821KM	K	510	670	738	902	1355	50	6	235	240	●	●	●	●
SFV14D911KM	K	550	745	819	1001	1500	50	6	255	220	●	●	●	●
SFV14D102KM	K	625	825	900	1100	1650	50	6	270	200	●	●	●	●
SFV14D112KM	K	680	895	990	1210	1815	50	6	280	180	●	●	●	●
SFV14D122KM	K	750	990	1080	1320	1980	50	6	310	150	●	●	●	●

●: Approved ○: Unauthorized ● RoHS & REACH Compliant

All Rights Reserved by Xiamen SET Electronics Co., Ltd. 2024-2026 V1.1

Specification

Model	Surge Level	Max. Continuous Operating Voltage		Varistor Voltage @1 mA DC		Clamping Voltage (Max.)		Pulse Impact Performance (40 times) (1.2/50 μs & 8/20 μs)	Max. Energy (10/1000 μs)	Typical Capacitance (For reference only) @1 kHz	Agency Information			
		VAC	VDC	Min.	Max.	V_C	I_P	Q		(pF)				
		(V)	(V)	(V)	(V)	(V)	(A)	(kV)	(J)		UL	cUL	TUV	CQC
SFV14D201KM	Q	130	170	180	220	340	50	6.6	70	1000	●	●	●	●
SFV14D221KM	Q	14	180	198	242	360	50	6.6	78	900	●	●	●	●
SFV14D241KM	Q	150	200	216	264	395	50	6.6	84	830	●	●	●	●
SFV14D271KM	Q	175	225	243	297	455	50	6.6	99	740	●	●	●	●
SFV14D301KM	Q	190	250	270	330	500	50	6.6	108	670	●	●	●	●
SFV14D331KM	Q	210	275	297	363	550	50	6.6	115	610	●	●	●	●
SFV14D361KM	Q	230	300	324	396	595	50	6.6	130	560	●	●	●	●
SFV14D391KM	Q	250	320	351	429	650	50	6.6	140	510	●	●	●	●
SFV14D431KM	Q	275	350	387	473	710	50	6.6	155	460	●	●	●	●
SFV14D471KM	Q	300	385	423	517	775	50	6.6	175	430	●	●	●	●
SFV14D511KM	Q	320	415	459	561	845	50	6.6	180	390	●	●	●	●
SFV14D561KM	Q	350	460	504	616	925	50	6.6	185	360	●	●	●	●
SFV14D621KM	Q	385	505	558	682	1025	50	6.6	190	320	●	●	●	●
SFV14D681KM	Q	420	560	612	748	1120	50	6.6	200	290	●	●	●	●

●: Approved ○: Unauthorized ● RoHS & REACH Compliant

All Rights Reserved by Xiamen SET Electronics Co., Ltd. 2024-2026 V1.1

Specification

Model	Surge Level	Max. Continuous Operating Voltage		Varistor Voltage @1 mA DC		Clamping Voltage (Max.)		Max. Peak Current (1 time, 8/20 μs)	Max. Energy (8/20 μs)	Typical Capacitance (For reference only) @1 kHz	Agency Information			
		VAC	VDC	Min.	Max.	V_C	I_P	H		(pF)	UL	cUL	TUV	CQC
		(V)	(V)	(V)	(V)	(V)	(A)	(kA)	(J)					
SFV14D201KM	H	130	170	180	220	340	50	8	150	1000	●	●	●	●
SFV14D221KM	H	140	180	198	242	360	50	8	160	900	●	●	●	●
SFV14D241KM	H	150	200	216	264	395	50	8	180	830	●	●	●	●
SFV14D271KM	H	175	225	243	297	455	50	8	200	740	●	●	●	●
SFV14D301KM	H	190	250	270	330	500	50	8	220	670	●	●	●	●
SFV14D331KM	H	210	275	297	363	550	50	8	245	610	●	●	●	●
SFV14D361KM	H	230	300	324	396	595	50	8	260	560	●	●	●	●
SFV14D391KM	H	250	320	351	429	650	50	8	290	510	●	●	●	●
SFV14D431KM	H	275	350	387	473	710	50	8	320	460	●	●	●	●
SFV14D471KM	H	300	385	423	517	775	50	8	350	430	●	●	●	●
SFV14D511KM	H	320	415	459	561	845	50	8	380	390	●	●	●	●
SFV14D561KM	H	350	460	504	616	925	50	8	400	360	●	●	●	●
SFV14D621KM	H	385	505	558	682	1025	50	8	400	320	●	●	●	●
SFV14D681KM	H	420	560	612	748	1120	50	8	400	290	●	●	●	●

●: Approved ○: Unauthorized ● RoHS & REACH Compliant

All Rights Reserved by Xiamen SET Electronics Co., Ltd. 2024-2026 V1.1

Performance Curve (For reference only)

- Max. Peak Current Derating Curves

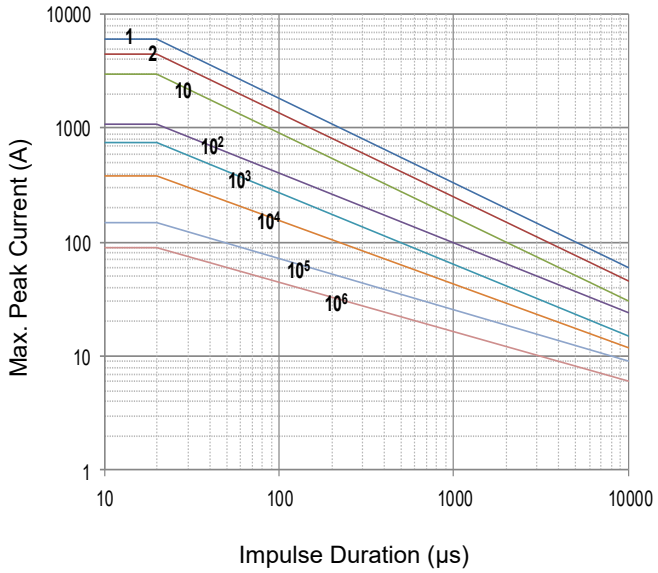

SFV14D820KM to SFV14D122KM

Note: 1, 2, 10, 10^2, 10^3, 10^4, 10^5, 10^6 Stand for Repetitions.

- Voltage-Current Characteristic Curves

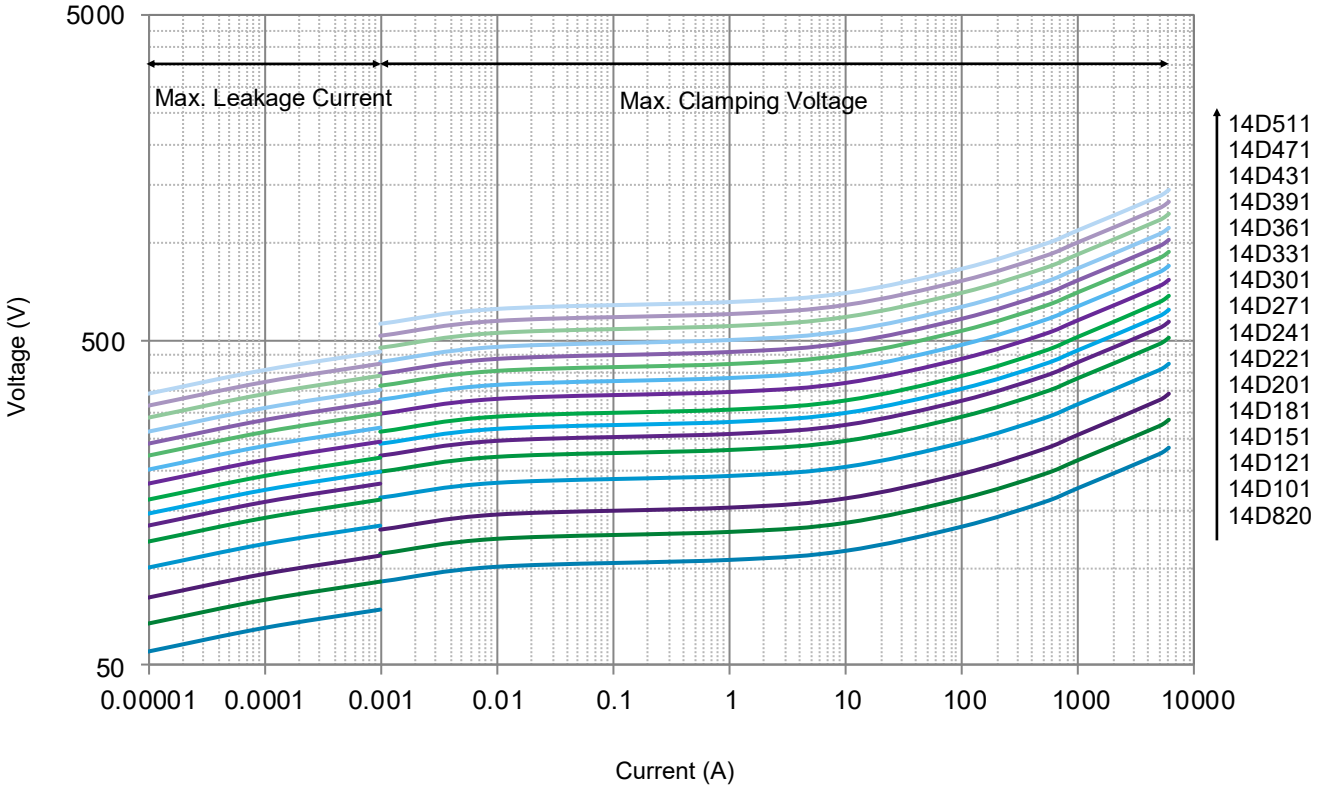

All Rights Reserved by Xiamen SET Electronics Co., Ltd. 2024-2026 V1.1

- Voltage-Current Characteristic Curves

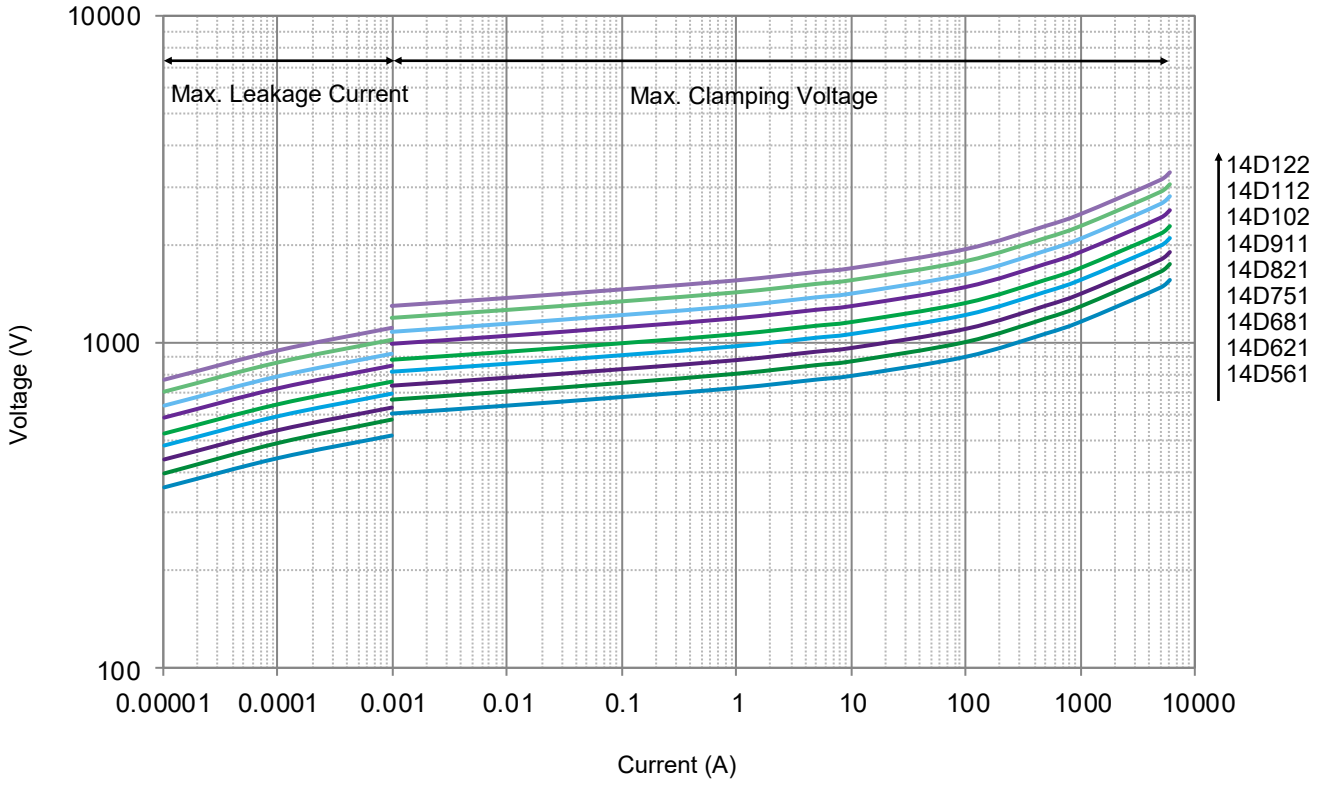

All Rights Reserved by Xiamen SET Electronics Co., Ltd. 2024-2026 V1.1

Packaging Information

- Bulk Packaging (Code: BUL)
- Bulk Packaging Quantity & Weight.

Series	Nominal Varistor Voltage	PE Bag	Box	Carton	G. W / Carton (365 × 265 × 245)
SFV14D M Series	(V)	(PCS)	(PCS)	(PCS)	(kg)±10%
	820 ~ 361	500	1000	6000	9 ~ 15
	391 ~ 621	400	800	4800	13 ~ 18
	681 ~ 122	250	500	3000	12 ~ 20

Note:
Other lead length packaging information, please contact SETsafe | SETfuse.

All Dimensions in mm

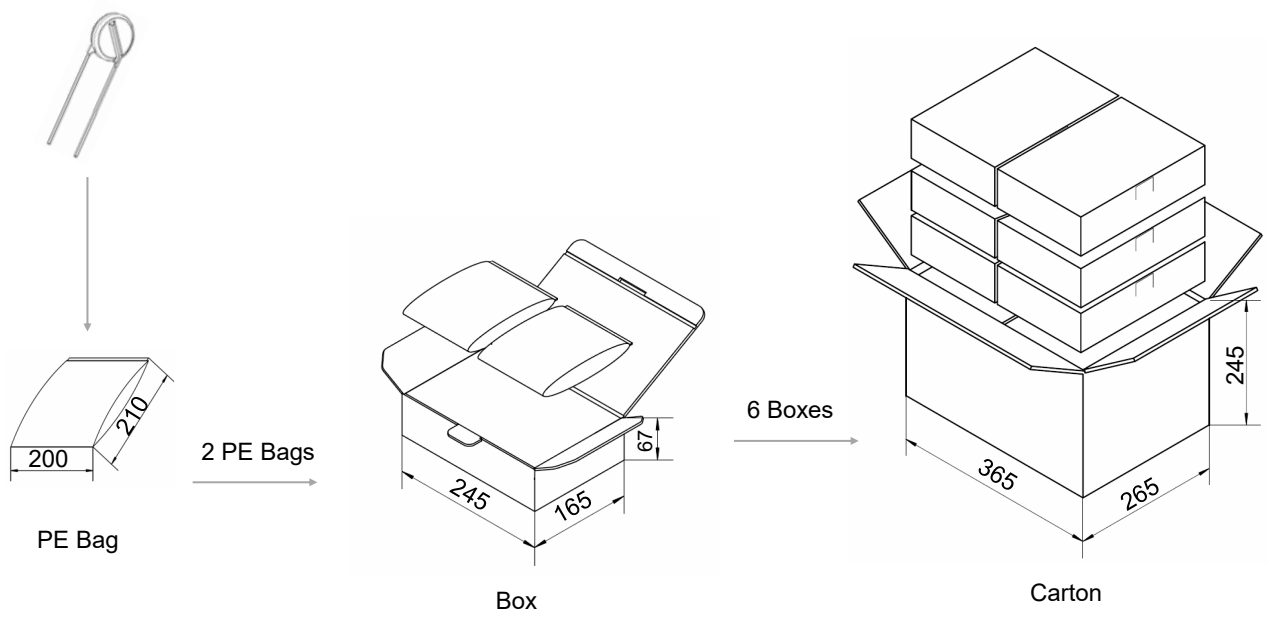

All Rights Reserved by Xiamen SET Electronics Co., Ltd. 2024-2026 V1.1

Packaging Information

- Tape Packaging (Code: 0AB)

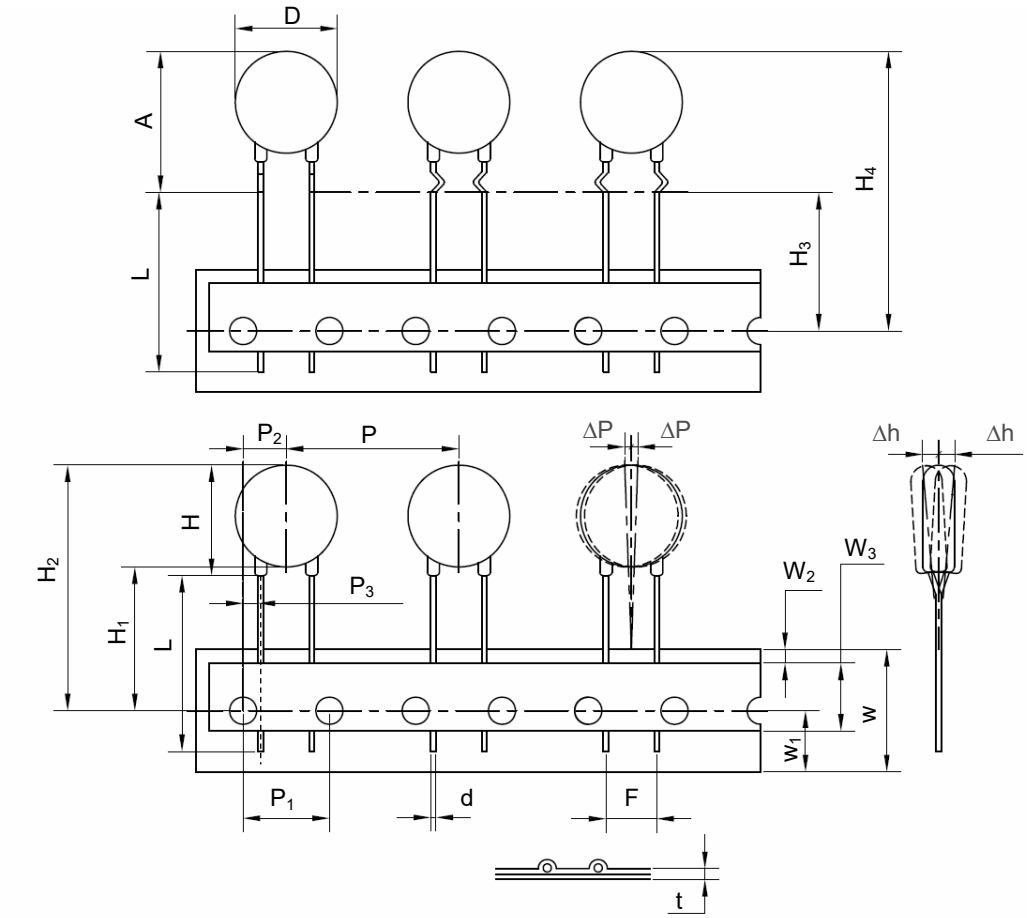

Dimensions (mm)	
P	25.4±1.0
P_1	12.7±0.3
P_2	6.35±1.3
P_3	2.6±0.7
ΔP(max.)	1.0
W	18.0±1.0
W_1	9.0±1.0
W_2(max.)	3.0
W_3	10.0±2.0
H(max.)	18.5
H_1	18.0
H_2(max.)	$40.0^{+2.0}_{-0}$
H_3	18.0
H_4(max.)	$42.0^{+2.0}_{-0}$
Δh(max.)	2.0
t (max.)	0.6
D(max.)	16.5
D_0	4.0±0.2
d	0.80±0.05
A(max.)	21.5
F	7.5±1.0
L(min.)	/

- Tape Packaging Quantity & Weight.

Series	Nominal Varistor Voltage	Box	Carton	G. W / Carton (365 × 265 × 415)
14D	(V)	(PCS)	(PCS)	(kg)±10%
	112 ~ 122	250	1750	10 ~ 12
	681 ~ 102	300	2100	9 ~ 12
	471 ~ 621	400	2800	9 ~ 11
	301 ~ 431	500	3500	8 ~ 10
	820 ~ 271	600	4200	6 ~ 9

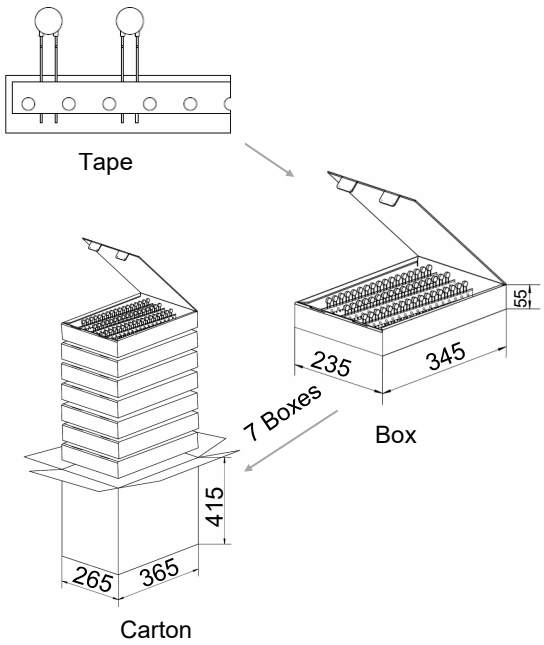

All Rights Reserved by Xiamen SET Electronics Co., Ltd. 2024-2026 V1.1

Packaging Information

- Tape Packaging (Code: 1AB)

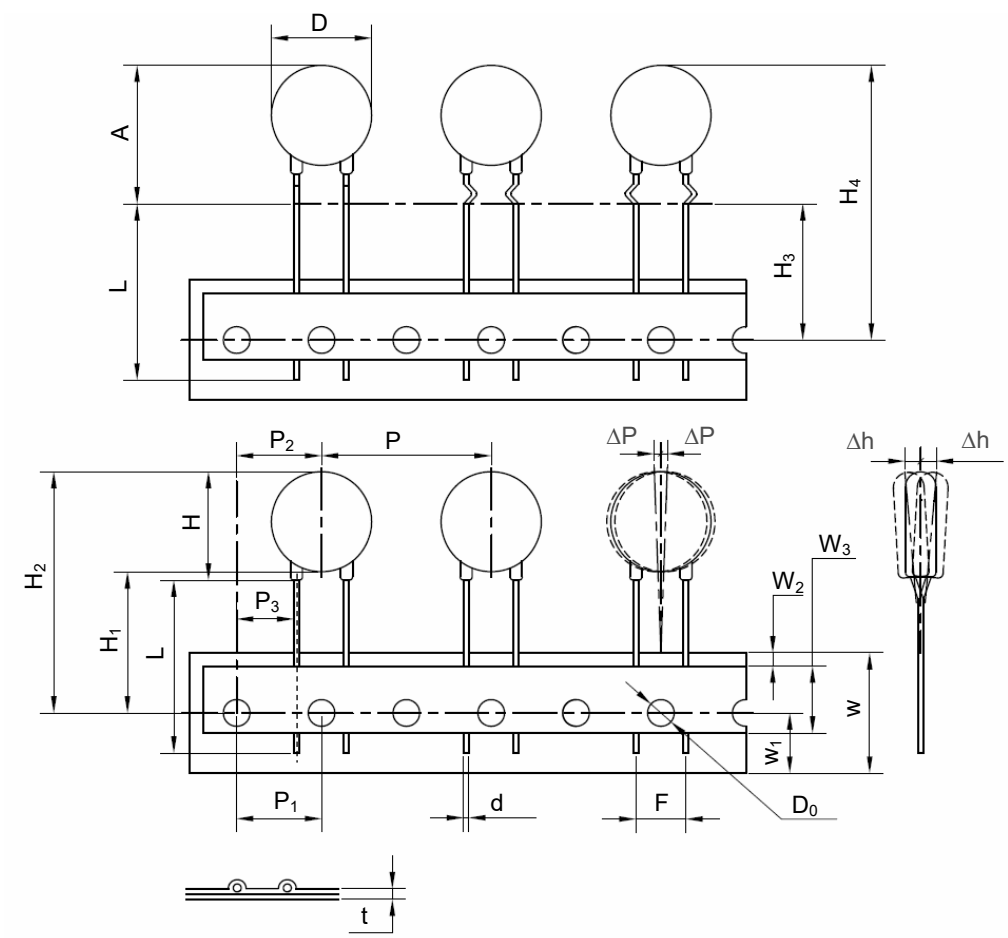

Dimensions (mm)	
P	25.4±1.0
P_1	12.7±0.3
P_2	12.7±1.3
P_3	8.95±0.7
ΔP(max.)	1.0
W	18.0±1.0
W_1	9.0±1.0
W_2(max.)	3.0
W_3	10.0±2.0
H(max.)	18.5
H_1	18.0
H_2(max.)	$40.0^{+2.0}_{-0}$
H_3	18.0
H_4(max.)	$42.0^{+2.0}_{-0}$
Δh(max.)	2.0
t (max.)	0.6
D(max.)	16.5
D_0	4.0±0.2
d	0.80±0.05
A(max.)	21.5
F	7.5±1.0
L(min.)	/

- Tape Packaging Quantity & Weight.

Series	Nominal Varistor Voltage	Box	Carton	G. W / Carton (365 × 265 × 415)
14D	(V)	(PCS)	(PCS)	(kg)±10%
	112 ~ 122	250	1750	10 ~ 12
	681 ~ 102	300	2100	9 ~ 12
	471 ~ 621	400	2800	9 ~ 11
	301 ~ 431	500	3500	8 ~ 10
	820 ~ 271	600	4200	6 ~ 9

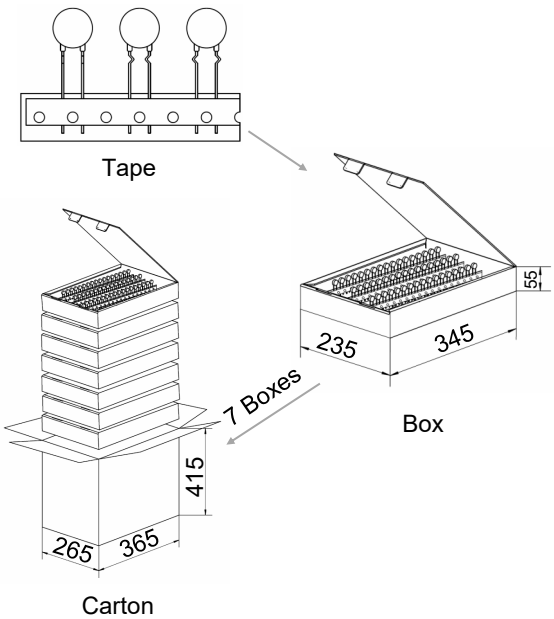

All Rights Reserved by Xiamen SET Electronics Co., Ltd. 2024-2026 V1.1

Packaging Information

- Tape Packaging (Code: 0EB)

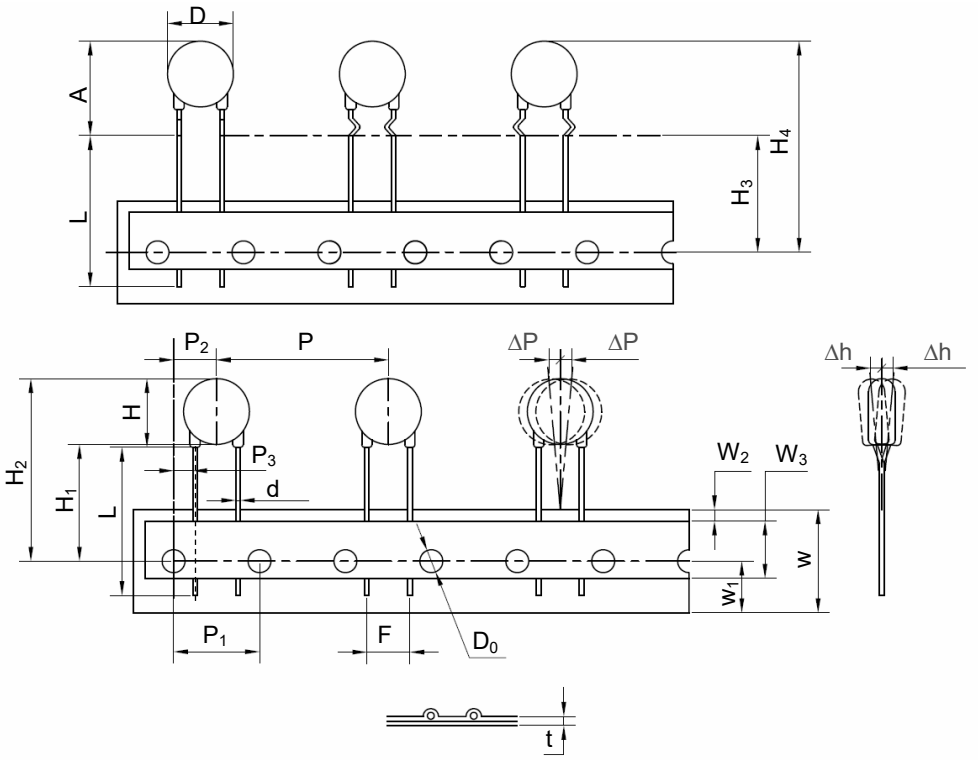

Dimensions (mm)	
P	30.0±1.0
P_1	15.0±0.3
P_2	7.5±1.3
P_3	3.75±1.0
ΔP(max.)	1.0
W	18.0±1.0
W_1	9.0±1.0
W_2(max.)	3.0
W_3	10.0±2.0
H(max.)	18.5
H_1	18.0
H_2(max.)	$40.0^{+2.0}_{-0}$
H_3	18.0
H_4(max.)	$42.0^{+2.0}_{-0}$
Δh(max.)	2.0
t (max.)	0.6
D(max.)	16.5
D_0	4.0±0.2
d	0.80±0.05
A(max.)	21.5
F	7.5±1.0
L(min.)	/

- Tape Packaging Quantity & Weight.

Series	Nominal Varistor Voltage	Box	Carton	G. W / Carton (365 × 265 × 415)
	(V)	(PCS)	(PCS)	(kg)±10%
14D	112 ~ 122	200	1400	8 ~ 9
	821 ~ 102	250	1750	8 ~ 9
	681 ~ 751	300	2100	8 ~ 9
	511 ~ 621	350	2450	8 ~ 9
	391 ~ 471	400	2800	7 ~ 9
	301 ~ 361	450	3150	7 ~ 9
	241 ~ 271	500	3500	6 ~ 7
	151			7
	181 ~ 221	550	3850	6 ~ 7
	101 ~ 121			
	820	600	4200	6

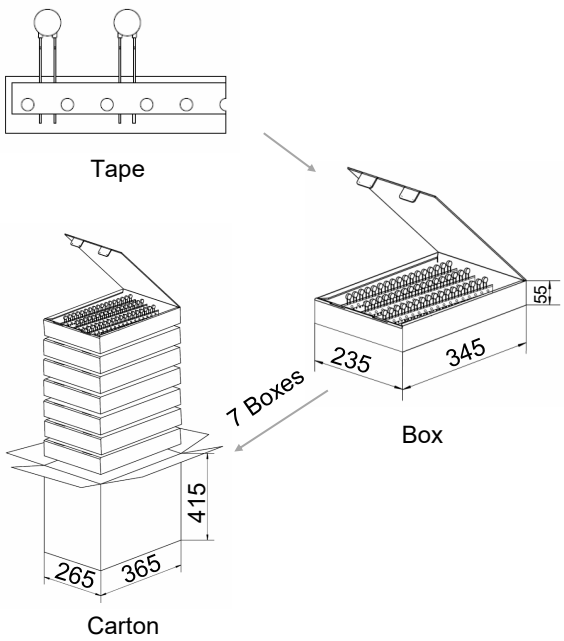

All Rights Reserved by Xiamen SET Electronics Co., Ltd. 2024-2026 V1.1

Packaging Information

- Tape Packaging (Code: 1EB)

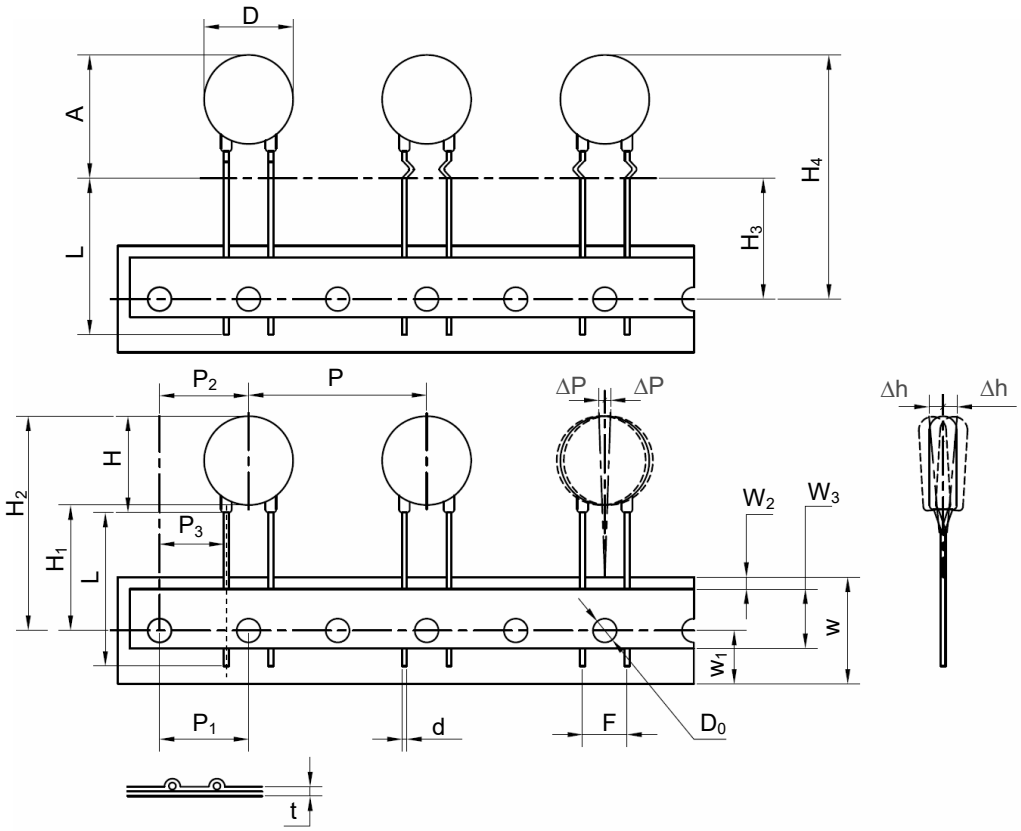

Dimensions (mm)	
P	30.0±1.0
P_1	15.0±0.3
P_2	15.0±1.3
P_3	11.25±1.0
ΔP(max.)	1.0
W	18.0±1.0
W_1	9.0±1.0
W_2(max.)	3.0
W_3	10.0±1.0
H(max.)	18.5
H_1	18.0
H_2(max.)	$40.0^{+2.0}_{-0}$
H_3	18.0
H_4(max.)	$42.0^{+2.0}_{-0}$
Δh(max.)	2.0
t (max.)	0.55
D(max.)	16.5
D_0	4.0±0.2
d	0.80±0.05
A(max.)	21.5
F	7.5±1.0
L(min.)	/

- Tape Packaging Quantity & Weight.

Series	Nominal Varistor Voltage	Box	Carton	G. W / Carton (365 × 265 × 415)
	(V)	(PCS)	(PCS)	(kg)±10%
14D	112 ~ 122	200	1400	8 ~ 9
	821 ~ 102	250	1750	8 ~ 9
	681 ~ 751	300	2100	8 ~ 9
	511 ~ 621	350	2450	8 ~ 9
	391 ~ 471	400	2800	7 ~ 9
	301 ~ 361	450	3150	7 ~ 9
	241 ~ 271	500	3500	6 ~ 7
	151			7
	181 ~ 221	550	3850	6 ~ 7
	101 ~ 121			
	820	600	4200	6

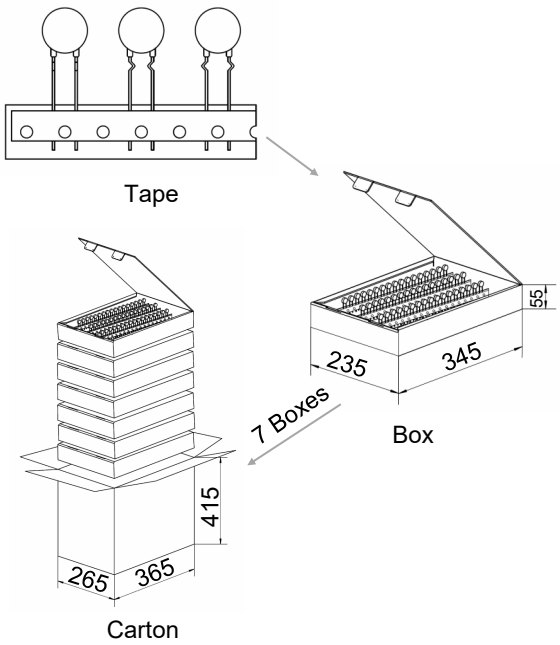

All Rights Reserved by Xiamen SET Electronics Co., Ltd. 2024-2026 V1.1

Packaging Information

- Reel Packaging (Code:1AR)

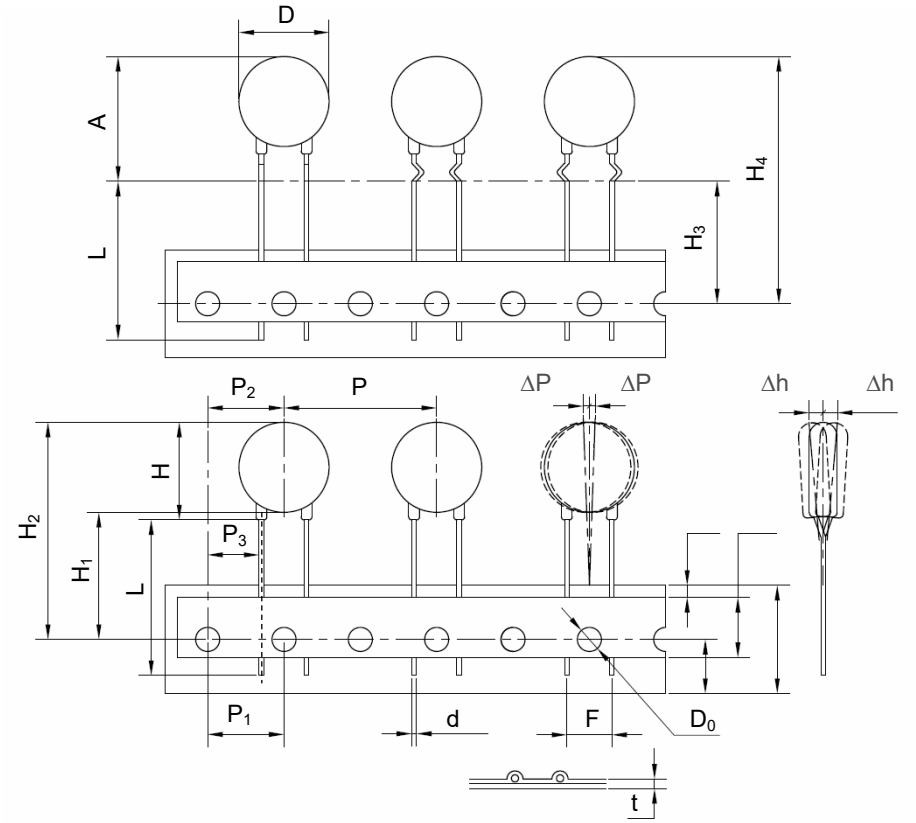

Dimensions (mm)	
P	25.4±1.0
P_1	12.7±0.3
P_2	12.7±1.3
P_3	8.95±0.7
ΔP(max.)	1.0
W	18.0±1.0
W_1	9.0±1.0
W_2(max.)	3.0
W_3	10.0±2.0
H(max.)	18.5
H_1	18.0
H_2(max.)	$40.0^{+2.0}_{-0}$
H_3	18.0
H_4(max.)	$42.0^{+2.0}_{-0}$
Δh(max.)	2.0
t (max.)	0.6
D(max.)	16.5
D_0	4.0±0.2
d	0.80±0.05
A(max.)	21.5
F	7.5±1.0
L(min.)	/

- Reel Packaging Quantity & Weight.

Series	Nominal Varistor Voltage	Box	Carton	G. W / Carton (375 × 335 × 385)
14D	(V)	(PCS)	(PCS)	(kg)±10%
	220 ~ 301	650	3250	4 ~ 8
	331 ~ 681	400	2000	4 ~ 8
	751 ~ 122	250	1250	5 ~ 8

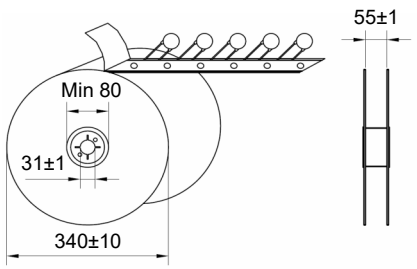

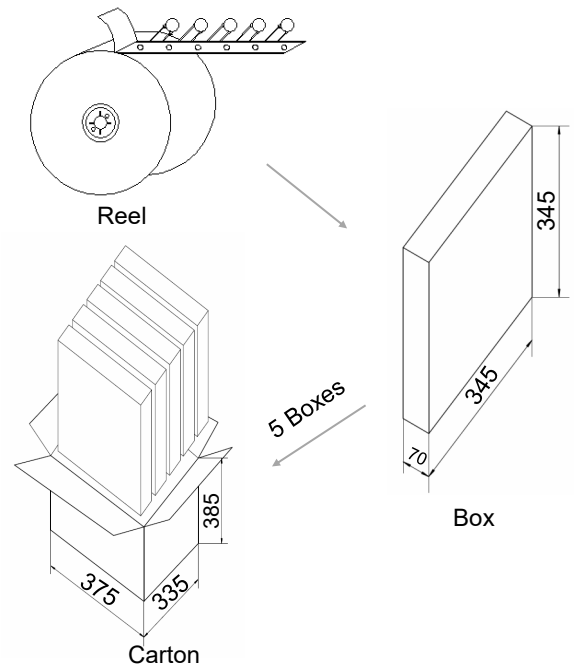

All Rights Reserved by Xiamen SET Electronics Co., Ltd. 2024-2026 V1.1

Dimensions (mm)

Model	L (Min.)	H (Max.)	T (Max.)	D (Max.)	d	F	F_1	A (Max.)
SFV20D820KM	20	25.5	4.8	23	1.00±0.05	10.0±0.5	1.4 ~ 2.8	27.5
SFV20D101KM	20	25.5	5.0	23	1.00±0.05	10.0±0.5	1.5 ~ 3.0	27.5
SFV20D121KM	20	25.5	5.2	23	1.00±0.05	10.0±0.5	1.6 ~ 3.2	27.5
SFV20D151KM	20	25.5	5.5	23	1.00±0.05	10.0±0.5	1.7 ~ 3.5	27.5
SFV20D181KM	20	25.5	4.9	23	1.00±0.05	10.0±0.5	1.0 ~ 2.9	27.5
SFV20D201KM	20	25.5	5.1	23	1.00±0.05	10.0±0.5	1.0 ~ 3.0	27.5
SFV20D221KM	20	25.5	5.2	23	1.00±0.05	10.0±0.5	1.0 ~ 3.0	27.5
SFV20D241KM	20	25.5	5.3	23	1.00±0.05	10.0±0.5	1.1 ~ 3.1	27.5
SFV20D271KM	20	25.5	5.5	23	1.00±0.05	10.0±0.5	1.3 ~ 3.3	27.5
SFV20D301KM	20	25.5	5.7	23	1.00±0.05	10.0±0.5	1.4 ~ 3.4	27.5
SFV20D331KM	20	25.5	5.8	23	1.00±0.05	10.0±0.5	1.6 ~ 3.6	27.5
SFV20D361KM	20	25.5	6.0	23	1.00±0.05	10.0±0.5	1.7 ~ 3.7	27.5
SFV20D391KM	20	25.5	6.2	23	1.00±0.05	10.0±0.5	1.9 ~ 3.9	27.5
SFV20D431KM	20	25.5	6.4	23	1.00±0.05	10.0±0.5	2.0 ~ 4.0	27.5
SFV20D471KM	20	25.5	6.7	23	1.00±0.05	10.0±0.5	2.2 ~ 4.2	27.5
SFV20D511KM	20	25.5	6.9	23	1.00±0.05	10.0±0.5	2.4 ~ 4.4	27.5
SFV20D561KM	20	25.5	7.2	23	1.00±0.05	10.0±0.5	2.7 ~ 4.7	27.5
SFV20D621KM	20	25.5	7.6	23	1.00±0.05	10.0±0.5	3.0 ~ 5.0	27.5
SFV20D681KM	20	25.5	8.0	23	1.00±0.05	10.0±0.5	3.2 ~ 5.2	27.5
SFV20D751KM	20	25.5	8.4	23	1.00±0.05	10.0±0.5	3.6 ~ 5.6	27.5
SFV20D821KM	20	25.5	8.8	23	1.00±0.05	10.0±0.5	3.9 ~ 5.9	27.5
SFV20D911KM	20	25.5	9.4	23	1.00±0.05	10.0±0.5	4.3 ~ 6.3	27.5
SFV20D102KM	20	25.5	9.9	23	1.00±0.05	10.0±0.5	4.8 ~ 6.8	27.5
SFV20D112KM	20	25.5	10.5	23	1.00±0.05	10.0±0.5	5.2 ~ 7.2	27.5
SFV20D122KM	20	25.5	11.1	23	1.00±0.05	10.0±0.5	5.7 ~ 7.7	27.5

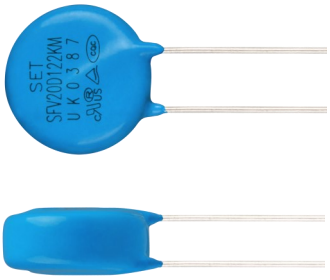

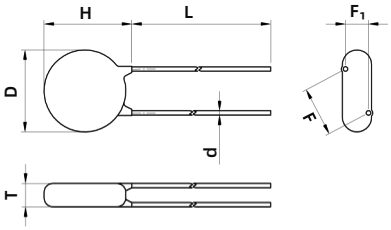

Straight Lead (A)

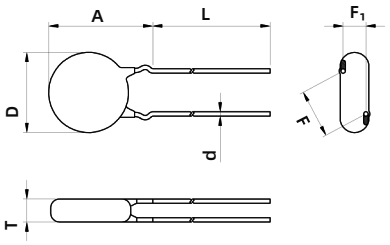

Outward Crimp (C)

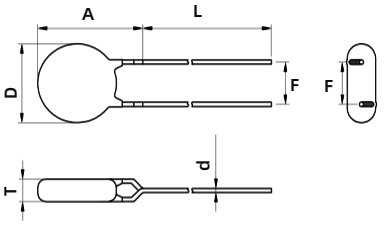

Inline Crimp (D)

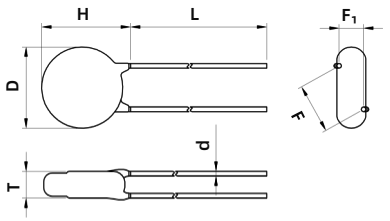

Little Straight Lead (I)

Note:
The above data is for reference only.

All Rights Reserved by Xiamen SET Electronics Co., Ltd. 2024-2026 V1.1

Specification

Model	Surge Level	Max. Continuous Operating Voltage		Varistor Voltage @1 mA DC		Clamping Voltage (Max.)		Max. Peak Current (1 time, 8/20 μs)	Max. Energy (10/1000 μs)	Typical Capacitance (For reference only) @1 kHz	Agency Information			
		VAC	VDC	Min.	Max.	V_C	I_P	S		(pF)	UL	cUL	TUV	CQC
		(V)	(V)	(V)	(V)	(V)	(A)	(kA)	(J)					
SFV20D820KM	S	50	65	74	90	135	100	6.5	38	4900	●	●	●	●
SFV20D101KM	S	60	85	90	110	165	100	6.5	45	4000	●	●	●	●
SFV20D121KM	S	75	100	108	132	200	100	6.5	55	3400	●	●	●	●
SFV20D151KM	S	95	125	135	165	250	100	6.5	70	2700	●	●	●	●
SFV20D181KM	S	115	150	162	198	300	100	6.5	85	2200	●	●	●	●
SFV20D201KM	S	130	170	180	220	340	100	6.5	95	2000	●	●	●	●
SFV20D221KM	S	140	180	198	242	360	100	6.5	100	1800	●	●	●	●
SFV20D241KM	S	150	200	216	264	395	100	6.5	108	1650	●	●	●	●
SFV20D271KM	S	175	225	243	297	455	100	6.5	127	1500	●	●	●	●
SFV20D301KM	S	190	250	270	330	500	100	6.5	136	1300	●	●	●	●
SFV20D331KM	S	210	275	297	363	550	100	6.5	150	1200	●	●	●	●
SFV20D361KM	S	230	300	324	396	595	100	6.5	163	1100	●	●	●	●
SFV20D391KM	S	250	320	351	429	650	100	6.5	180	1000	●	●	●	●
SFV20D431KM	S	275	350	387	473	710	100	6.5	190	930	●	●	●	●
SFV20D471KM	S	300	385	423	517	775	100	6.5	220	850	●	●	●	●
SFV20D511KM	S	320	415	459	561	845	100	6.5	220	780	●	●	●	●
SFV20D561KM	S	350	460	504	616	925	100	6.5	220	710	●	●	●	●
SFV20D621KM	S	385	505	558	682	1025	100	6.5	220	650	●	●	●	●
SFV20D681KM	S	420	560	612	748	1120	100	6.5	230	600	●	●	●	●
SFV20D751KM	S	460	615	675	825	1240	100	6.5	255	530	●	●	●	●
SFV20D821KM	S	510	670	738	902	1355	100	6.5	282	500	●	●	●	●
SFV20D911KM	S	550	745	819	1001	1500	100	6.5	310	440	●	●	●	●
SFV20D102KM	S	625	825	900	1100	1650	100	6.5	342	400	●	●	●	●
SFV20D112KM	S	680	895	990	1210	1815	100	6.5	383	360	●	●	●	●
SFV20D122KM	S	750	990	1080	1320	1980	100	6.5	408	320	●	●	●	●

●: Approved ○: Unauthorized ● RoHS & REACH Compliant

All Rights Reserved by Xiamen SET Electronics Co., Ltd. 2024-2026 V1.1

Specification

Model	Surge Level	Max. Continuous Operating Voltage		Varistor Voltage @1 mA DC		Clamping Voltage (Max.)		Max. Peak Current (1 time, 8/20 μs)	Max. Energy (10/1000 μs)	Typical Capacitance (For reference only) @1 kHz	Agency Information			
		VAC	VDC	Min.	Max.	V_C	I_P	K		(pF)	UL	cUL	TUV	CQC
		(V)	(V)	(V)	(V)	(V)	(A)	(kA)	(J)					
SFV20D820KM	K	50	65	74	90	135	100	10	56	4900	●	●	●	●
SFV20D101KM	K	60	85	90	110	165	100	10	70	4000	●	●	●	●
SFV20D121KM	K	75	100	108	132	200	100	10	85	3400	●	●	●	●
SFV20D151KM	K	95	125	135	165	250	100	10	106	2700	●	●	●	●
SFV20D181KM	K	115	150	162	198	300	100	10	130	2200	●	●	●	●
SFV20D201KM	K	130	170	180	220	340	100	10	140	2000	●	●	●	●
SFV20D221KM	K	140	180	198	242	360	100	10	155	1800	●	●	●	●
SFV20D241KM	K	150	200	216	264	395	100	10	168	1650	●	●	●	●
SFV20D271KM	K	175	225	243	297	455	100	10	190	1500	●	●	●	●
SFV20D301KM	K	190	250	270	330	500	100	10	210	1300	●	●	●	●
SFV20D331KM	K	210	275	297	363	550	100	10	228	1200	●	●	●	●
SFV20D361KM	K	230	300	324	396	595	100	10	255	1100	●	●	●	●
SFV20D391KM	K	250	320	351	429	650	100	10	275	1000	●	●	●	●
SFV20D431KM	K	275	350	387	473	710	100	10	305	930	●	●	●	●
SFV20D471KM	K	300	385	423	517	775	100	10	350	850	●	●	●	●
SFV20D511KM	K	320	415	459	561	845	100	10	360	780	●	●	●	●
SFV20D561KM	K	350	460	504	616	925	100	10	380	710	●	●	●	●
SFV20D621KM	K	385	505	558	682	1025	100	10	390	650	●	●	●	●
SFV20D681KM	K	420	560	612	748	1120	100	10	400	600	●	●	●	●
SFV20D751KM	K	460	615	675	825	1240	100	10	420	530	●	●	●	●
SFV20D821KM	K	510	670	738	902	1355	100	10	460	500	●	●	●	●
SFV20D911KM	K	550	745	819	1001	1500	100	10	510	440	●	●	●	●
SFV20D102KM	K	625	825	900	1100	1650	100	10	565	400	●	●	●	●
SFV20D112KM	K	680	895	990	1210	1815	100	10	620	360	●	●	●	●
SFV20D122KM	K	750	990	1080	1320	1980	100	10	660	320	●	●	●	●

●: Approved ○: Unauthorized ● RoHS & REACH Compliant

All Rights Reserved by Xiamen SET Electronics Co., Ltd. 2024-2026 V1.1

Specification

Model	Surge Level	Max. Continuous Operating Voltage		Varistor Voltage @1 mA DC		Clamping Voltage (Max.)		Pulse Impact Performance (40 times) (1.2/50 μs & 8/20 μs)	Max. Energy (10/1000 μs)	Typical Capacitance (For reference only) @1 kHz	Agency Information			
		VAC	VDC	Min.	Max.	V_C	I_P	Q		(pF)				
		(V)	(V)	(V)	(V)	(V)	(A)	(kV)	(J)		UL	cUL	TUV	CQC
SFV20D201KM	Q	130	170	180	220	340	100	10	140	2000	●	●	●	●
SFV20D221KM	Q	140	180	198	242	360	100	10	155	1800	●	●	●	●
SFV20D241KM	Q	150	200	216	264	395	100	10	168	1650	●	●	●	●
SFV20D271KM	Q	175	225	243	297	455	100	10	190	1500	●	●	●	●
SFV20D301KM	Q	190	250	270	330	500	100	10	210	1300	●	●	●	●
SFV20D331KM	Q	210	275	297	363	550	100	10	228	1200	●	●	●	●
SFV20D361KM	Q	230	300	324	396	595	100	10	255	1100	●	●	●	●
SFV20D391KM	Q	250	320	351	429	650	100	10	275	1000	●	●	●	●
SFV20D431KM	Q	275	350	387	473	710	100	10	305	930	●	●	●	●
SFV20D471KM	Q	300	385	423	517	775	100	10	350	850	●	●	●	●
SFV20D511KM	Q	320	415	459	561	845	100	10	360	780	●	●	●	●
SFV20D561KM	Q	350	460	504	616	925	100	10	380	710	●	●	●	●
SFV20D621KM	Q	385	505	558	682	1025	100	10	390	650	●	●	●	●
SFV20D681KM	Q	420	560	612	748	1120	100	10	400	600	●	●	●	●

●: Approved ○: Unauthorized ● RoHS & REACH Compliant

All Rights Reserved by Xiamen SET Electronics Co., Ltd. 2024-2026 V1.1

Specification

Model	Surge Level	Max. Continuous Operating Voltage		Varistor Voltage @1 mA DC		Clamping Voltage (Max.)		Max. Peak Current (1 time, 8/20 μs)	Max. Energy (8/20 μs)	Typical Capacitance (For reference only) @1 kHz	Agency Information			
		VAC	VDC	Min.	Max.	V_C	I_P	H		(pF)				
		(V)	(V)	(V)	(V)	(V)	(A)	(kA)	(J)		UL	cUL	TUV	CQC
SFV20D201KM	H	130	170	180	220	340	100	13	300	2000	●	●	●	●
SFV20D221KM	H	140	180	198	242	360	100	13	320	1800	●	●	●	●
SFV20D241KM	H	150	200	216	264	395	100	13	340	1650	●	●	●	●
SFV20D271KM	H	175	225	243	297	455	100	13	380	1500	●	●	●	●
SFV20D301KM	H	190	250	270	330	500	100	13	400	1300	●	●	●	●
SFV20D331KM	H	210	275	297	363	550	100	13	440	1200	●	●	●	●
SFV20D361KM	H	230	300	324	396	595	100	13	470	1100	●	●	●	●
SFV20D391KM	H	250	320	351	429	650	100	13	510	1000	●	●	●	●
SFV20D431KM	H	275	350	387	473	710	100	13	550	930	●	●	●	●
SFV20D471KM	H	300	385	423	517	775	100	13	600	850	●	●	●	●
SFV20D511KM	H	320	415	459	561	845	100	13	650	780	●	●	●	●
SFV20D561KM	H	350	460	504	616	925	100	13	700	710	●	●	●	●
SFV20D621KM	H	385	505	558	682	1025	100	13	700	650	●	●	●	●
SFV20D681KM	H	420	560	612	748	1120	100	13	800	600	●	●	●	●

●: Approved ○: Unauthorized ● RoHS & REACH Compliant

All Rights Reserved by Xiamen SET Electronics Co., Ltd. 2024-2026 V1.1

Performance Curve (For reference only)

- Max. Peak Current Derating Curves

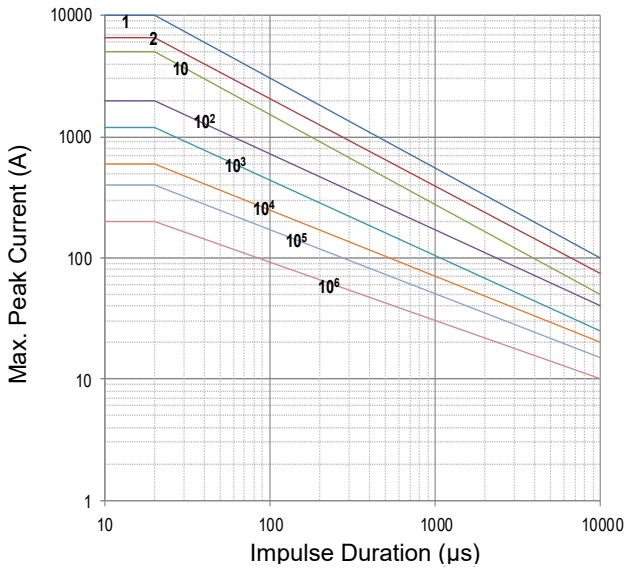

SFV20D820KM to SFV20D122KM

Note: 1, 2, 10, 10^2, 10^3, 10^4, 10^5, 10^6 Stand for Repetitions.

- Voltage-Current Characteristic Curves

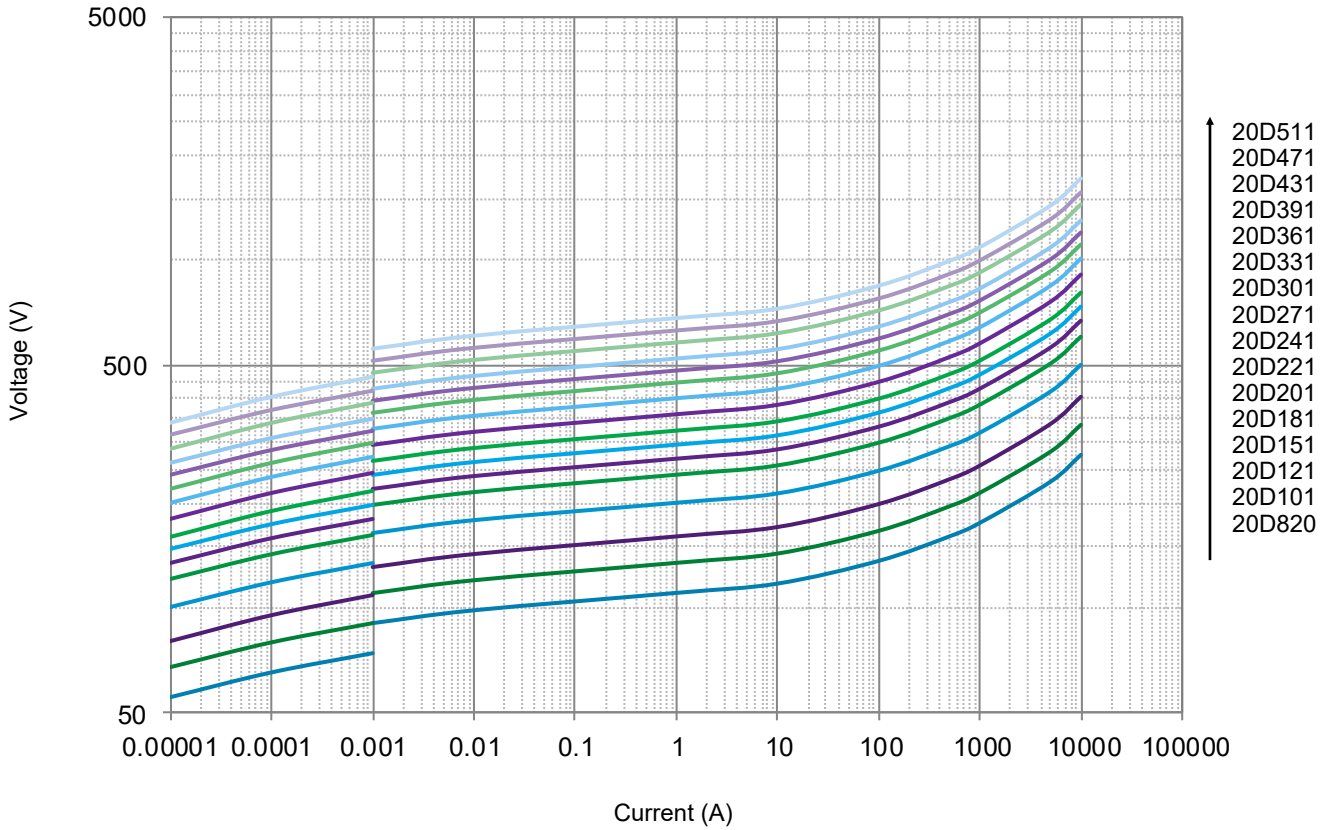

All Rights Reserved by Xiamen SET Electronics Co., Ltd. 2024-2026 V1.1

- Voltage-Current Characteristic Curves

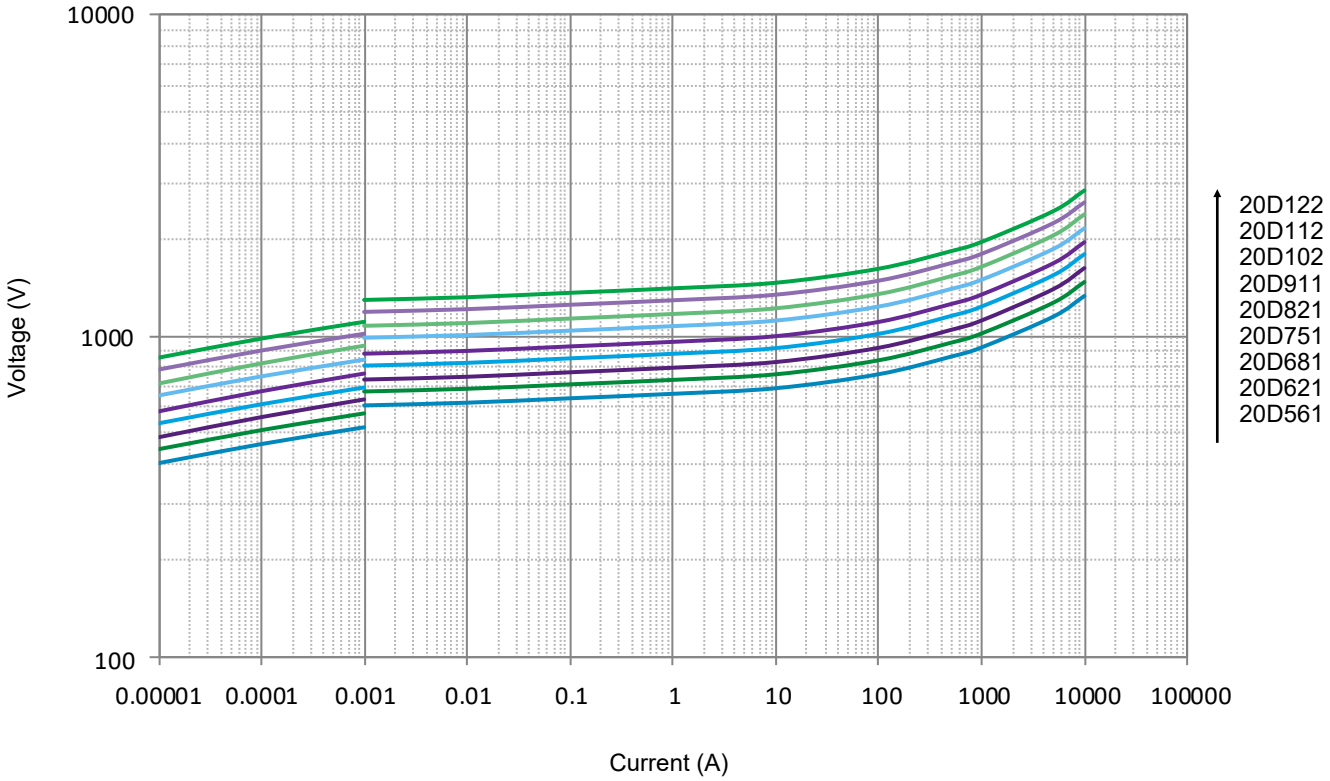

All Rights Reserved by Xiamen SET Electronics Co., Ltd. 2024-2026 V1.1

Packaging Information

- Bulk Packaging (Code: BUL)
- Bulk Packaging Quantity & Weight.

Series	Nominal Varistor Voltage	PE Bag	Box	Carton	G. W / Carton （365 × 265 × 245）
SFV20D M Series	(V)	(PCS)	(PCS)	(PCS)	(kg)±10%
	820 ~ 471	250	500	3000	10 ~ 18
	511 ~ 821	200	400	2400	16 ~ 23
	911 ~ 122	100	200	1200	12 ~ 13

Note:
Other lead length packaging information, please contact SETsafe | SETfuse.

All Dimensions in mm

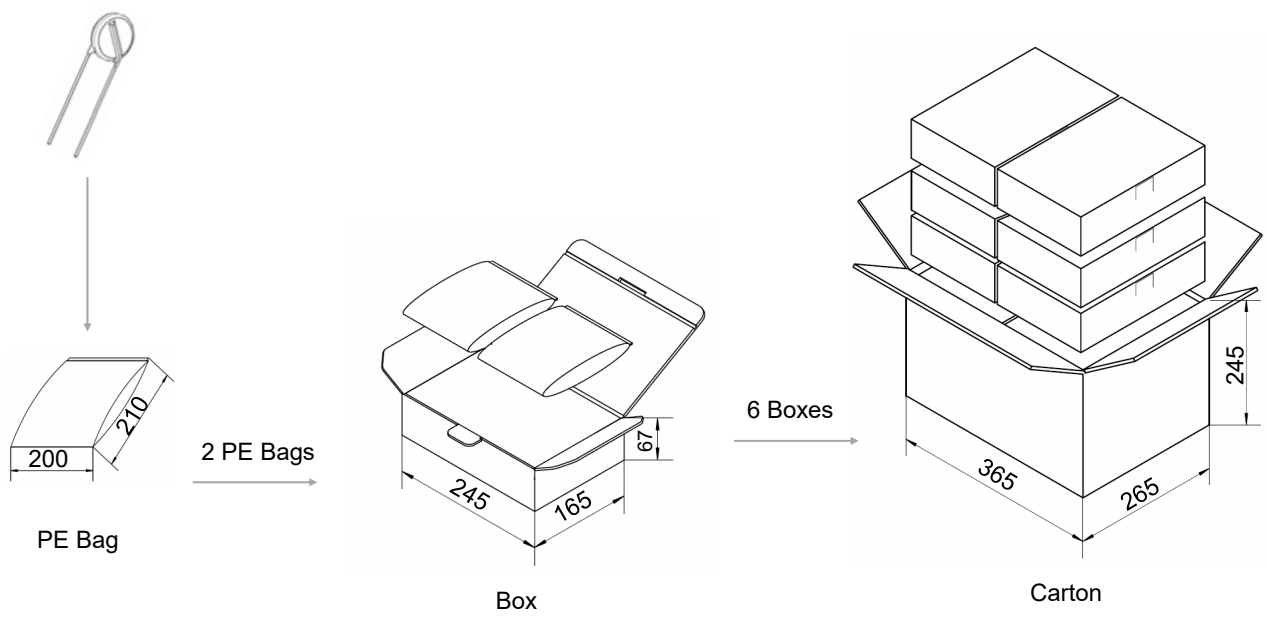

All Rights Reserved by Xiamen SET Electronics Co., Ltd. 2024-2026 V1.1

Packaging Information

- Tape Packaging (Code: 1AB)

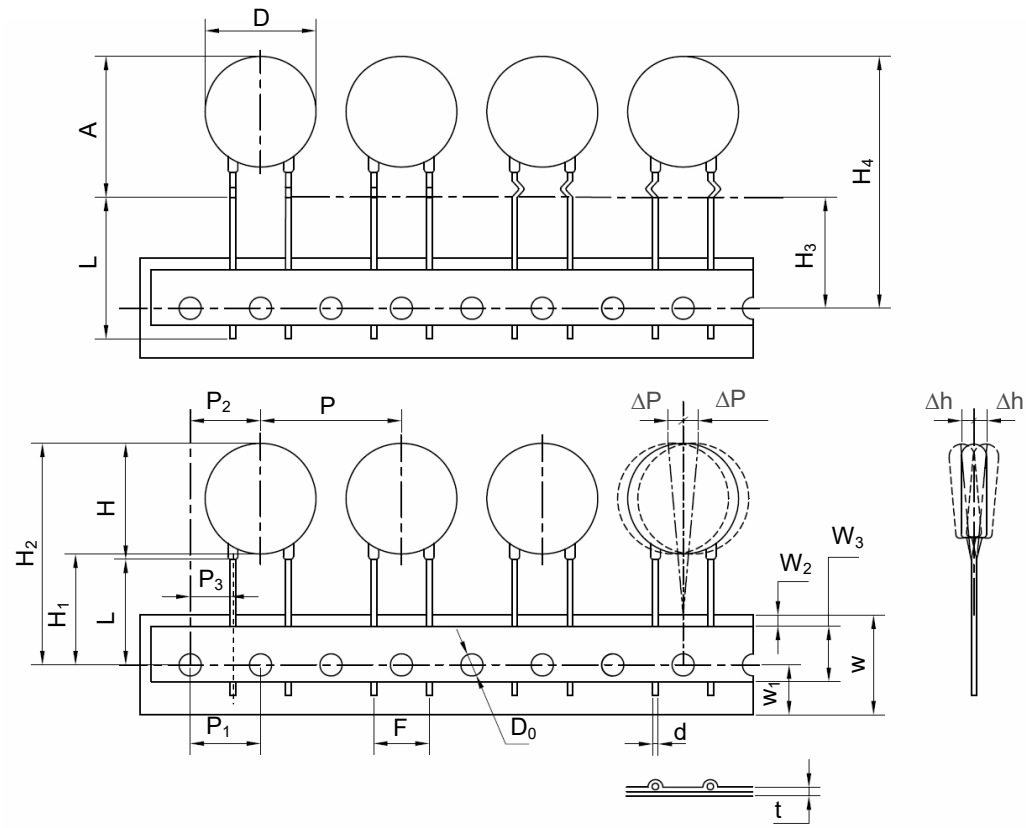

Dimensions (mm)	
P	25.4±1.0
P_1	12.7±0.3
P_2	12.7±1.3
P_3	7.7±0.7
ΔP(max.)	1.0
W	18.0±1.0
W_1	9.0±1.0
W_2(max.)	3.0
W_3	10.0±2.0
H(max.)	25.5
H_1	18.0
H_2(max.)	$45.0^{+2.0}_{-0}$
H_3	18.0
H_4(max.)	$48.0^{+2.0}_{-0}$
Δh(max.)	2.0
t (max.)	0.6
D(max.)	23.0
D_0	4.0±0.2
d	1.00±0.05
A(max.)	27.5
F	10.0±0.5
L(min.)	/

- Tape Packaging Quantity & Weight.

Series	Nominal Varistor Voltage	Box	Carton	G. W / Carton (365 × 265 × 415)
20D	(V)	(PCS)	(PCS)	(kg)±10%
	102 ~ 122	250	1500	18 ~ 22
	751 ~ 911	300	1800	17 ~ 20
	621 ~ 681	350	2100	17 ~ 18
	471 ~ 561	400	2400	16 ~ 17
	391~ 431	450	2700	15 ~ 16
	301 ~ 361	500	3000	15 ~ 16
	221 ~ 271	550	3300	13 ~ 15
	151			15
	181 ~ 201	600	3600	13 ~ 14
	820 ~ 121			11 ~ 14

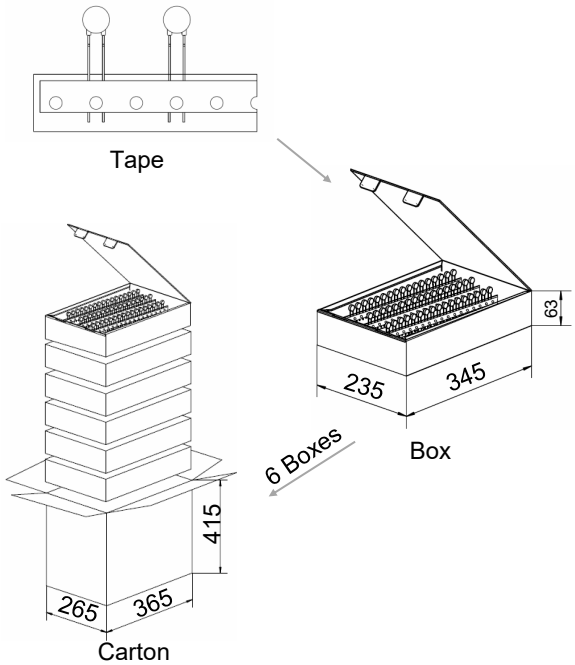

All Rights Reserved by Xiamen SET Electronics Co., Ltd. 2024-2026 V1.1

Packaging Information

- Tape Packaging (Code: 1EB)

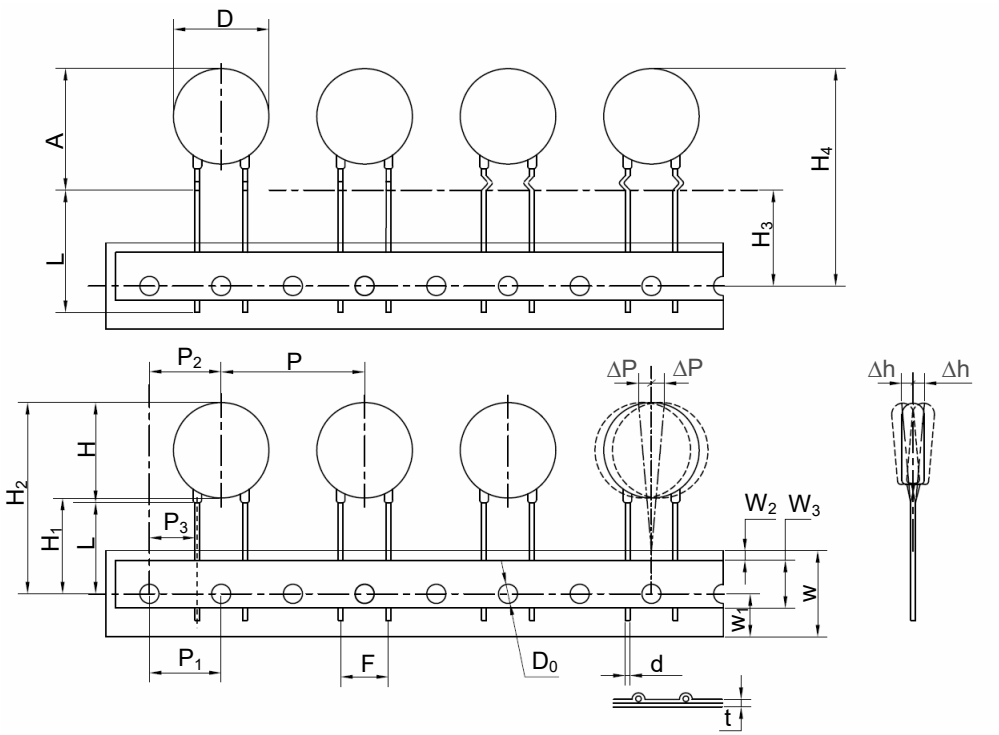

Dimensions (mm)	
P	30.0±1.0
P_1	15.0±0.3
P_2	15.0±1.3
P_3	10.0±1.0
ΔP(max.)	1.0
W	18.0±1.0
W_1	9.0±1.0
W_2(max.)	3.0
W_3	10.0±2.0
H(max.)	25.5
H_1	18.0
H_2(max.)	$45.0^{+2.0}_{-0}$
H_3	18.0
H_4(max.)	$48.0^{+2.0}_{-0}$
Δh(max.)	2.0
t (max.)	0.6
D(max.)	23.0
D_0	4.0±0.2
d	1.00±0.05
A(max.)	27.5
F	10.0±0.5
L(min.)	/

- Tape Packaging Quantity & Weight.

Series	Nominal Varistor Voltage	Box	Carton	G. W / Carton (365 × 265 × 415)
20D	(V)	(PCS)	(PCS)	(kg)±10%
	102 ~ 122	200	1200	14 ~ 16
	251~ 911	250	1500	14 ~ 16
	561 - 681	300	1800	13 ~ 15
	431 ~ 511	350	2100	13 ~ 14
	331 ~ 391	400	2400	12 ~ 14
	241 ~ 301	450	2700	11 ~ 13
	181 ~ 221	500	3000	10 ~ 12
	820 ~ 121			10 ~ 11

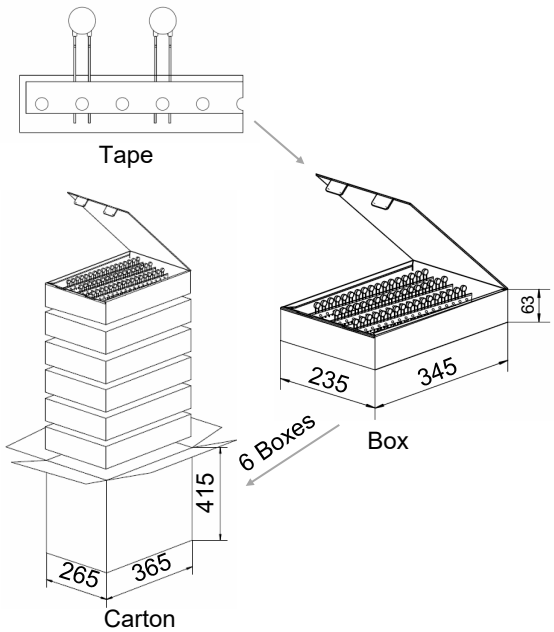

All Rights Reserved by Xiamen SET Electronics Co., Ltd. 2024-2026 V1.1

Dimensions (mm)

Model	L (Min.)	H (Max.)	T (Max.)	D (Max.)	d	F	F_1	A (Max.)
SFV25D470KM	20	32	5.6	28	1.20±0.05	10.0±1.0	1.4 ~ 3.1	35
SFV25D560KM	20	32	5.8	28	1.20±0.05	10.0±1.0	1.5 ~ 3.3	35
SFV25D680KM	20	32	6.1	28	1.20±0.05	10.0±1.0	1.6 ~ 3.6	35
SFV25D820KM	20	32	5.4	28	1.20±0.05	10.0±1.0	1.4 ~ 3.0	35
SFV25D101KM	20	32	5.6	28	1.20±0.05	10.0±1.0	1.5 ~ 3.2	35
SFV25D121KM	20	32	5.8	28	1.20±0.05	10.0±1.0	1.6 ~ 3.4	35
SFV25D151KM	20	32	6.1	28	1.20±0.05	10.0±1.0	1.7 ~ 3.7	35
SFV25D181KM	20	32	5.4	28	1.20±0.05	10.0±1.0	1.4 ~ 3.3	35
SFV25D201KM	20	32	5.5	28	1.20±0.05	10.0±1.0	1.5 ~ 3.4	35
SFV25D221KM	20	32	5.6	28	1.20±0.05	10.0±1.0	1.6 ~ 3.5	35
SFV25D241KM	20	32	5.7	28	1.20±0.05	10.0±1.0	1.7 ~ 3.6	35
SFV25D271KM	20	32	5.9	28	1.20±0.05	10.0±1.0	1.8 ~ 3.8	35
SFV25D301KM	20	32	5.7	28	1.20±0.05	10.0±1.0	1.6 ~ 3.6	35
SFV25D331KM	20	32	5.9	28	1.20±0.05	10.0±1.0	1.8 ~ 3.8	35
SFV25D361KM	20	32	6.5	28	1.20±0.05	10.0±1.0	1.9 ~ 3.9	35
SFV25D391KM	20	32	6.0	28	1.20±0.05	10.0±1.0	2.1 ~ 4.1	35
SFV25D431KM	20	32	6.2	28	1.20±0.05	10.0±1.0	2.2 ~ 4.2	35
SFV25D471KM	20	32	6.4	28	1.20±0.05	10.0±1.0	2.4 ~ 4.4	35
SFV25D511KM	20	32	6.6	28	1.20±0.05	10.0±1.0	2.6 ~ 4.6	35
SFV25D561KM	20	32	6.8	28	1.20±0.05	10.0±1.0	2.9 ~ 4.9	35
SFV25D621KM	20	32	7.0	28	1.20±0.05	10.0±1.0	3.2 ~ 5.2	35
SFV25D681KM	20	32	8.5	28	1.20±0.05	10.0±1.0	3.4 ~ 5.4	35
SFV25D751KM	20	32	8.9	28	1.20±0.05	10.0±1.0	3.8 ~ 5.8	35
SFV25D821KM	20	32	9.4	28	1.20±0.05	10.0±1.0	4.1 ~ 6.1	35
SFV25D911KM	20	32	9.9	28	1.20±0.05	10.0±1.0	4.5 ~ 6.5	35
SFV25D102KM	20	32	10.5	28	1.20±0.05	10.0±1.0	5.0 ~ 7.0	35
SFV25D112KM	20	32	11.1	28	1.20±0.05	10.0±1.0	5.4 ~ 7.4	35
SFV25D122KM	20	32	11.7	28	1.20±0.05	10.0±1.0	5.9 ~ 7.9	35

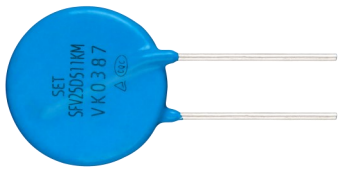

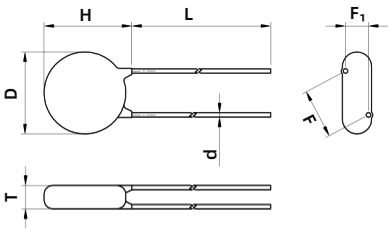

Straight Lead (A)

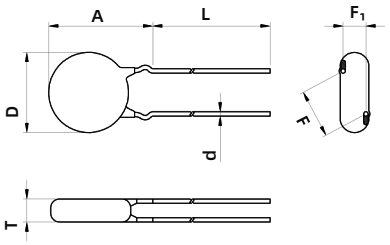

Outward Crimp (C)

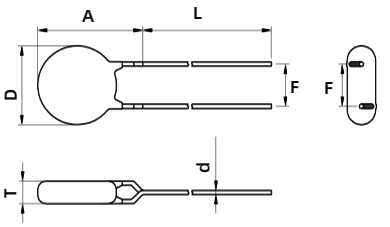

Inline Crimp (D)

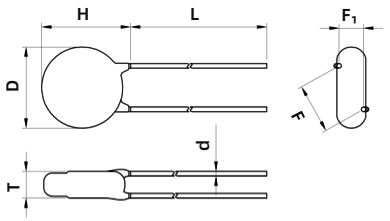

Little Straight Lead (I)

Note:
The above data is for reference only.

All Rights Reserved by Xiamen SET Electronics Co., Ltd. 2024-2026 V1.1

Specification

Model	Max. Continuous Operating Voltage		Varistor Voltage @1 mA DC		Clamping Voltage (Max.)		Max. Discharge Current (8/20 μs)		Max. Energy (10/1000 μs)	Typical Capacitance (For reference only) @1 kHz	Agency Information	
	VAC	VDC	Min.	Max.	V_C	I_P	I_n	I_{max}	(J)	(pF)	TUV	CQC
	(V)	(V)	(V)	(V)	(V)	(A)	(kA)	(kA)				
SFV25D470KM	30	38	42	52	93	30	3	6	50	11500	●	●
SFV25D560KM	35	45	50	62	110	30	3	6	60	10500	●	●
SFV25D680KM	40	56	61	75	135	30	3	6	70	9050	●	●
SFV25D820KM	50	65	74	90	135	150	10	20	80	7700	●	●
SFV25D101KM	60	85	90	110	165	150	10	20	100	6300	●	●
SFV25D121KM	75	100	108	132	200	150	10	20	120	5200	●	●
SFV25D151KM	95	125	135	165	250	150	10	20	160	4300	●	●
SFV25D181KM	115	150	162	198	300	150	10	20	175	3500	●	●
SFV25D201KM	130	170	180	220	340	150	10	20	190	3200	●	●
SFV25D221KM	140	180	198	242	360	150	10	20	200	2900	●	●
SFV25D241KM	150	200	216	264	395	150	10	20	220	2650	●	●
SFV25D271KM	175	225	243	297	455	150	10	20	255	2400	●	●
SFV25D301KM	190	250	270	330	500	150	10	20	275	2100	●	●
SFV25D331KM	210	275	297	363	550	150	10	20	300	1900	●	●
SFV25D361KM	230	300	324	396	595	150	10	20	330	1750	●	●
SFV25D391KM	250	320	351	429	650	150	10	20	360	1600	●	●
SFV25D431KM	275	350	387	473	710	150	10	20	380	1500	●	●
SFV25D471KM	300	385	423	517	775	150	10	20	400	1400	●	●
SFV25D511KM	320	415	459	561	845	150	10	20	420	1250	●	●
SFV25D561KM	350	460	504	616	925	150	10	20	440	1150	●	●
SFV25D621KM	385	505	558	682	1025	150	10	20	450	1050	●	●
SFV25D681KM	420	560	612	748	1120	150	10	20	460	950	●	●
SFV25D751KM	460	615	675	825	1240	150	10	20	510	850	●	●
SFV25D821KM	510	670	738	902	1355	150	10	20	520	830	●	●
SFV25D911KM	550	745	819	1001	1500	150	10	20	620	730	●	●
SFV25D102KM	625	825	900	1100	1650	150	10	20	690	660	●	●
SFV25D112KM	680	895	990	1210	1815	150	10	20	760	600	●	●
SFV25D122KM	750	990	1080	1320	1980	150	10	20	820	530	●	●

●: Approved ○: Unauthorized ● RoHS & REACH Compliant

All Rights Reserved by Xiamen SET Electronics Co., Ltd. 2024-2026 V1.1

Performance Curve (For reference only)

- Max. Peak Current Derating Curves

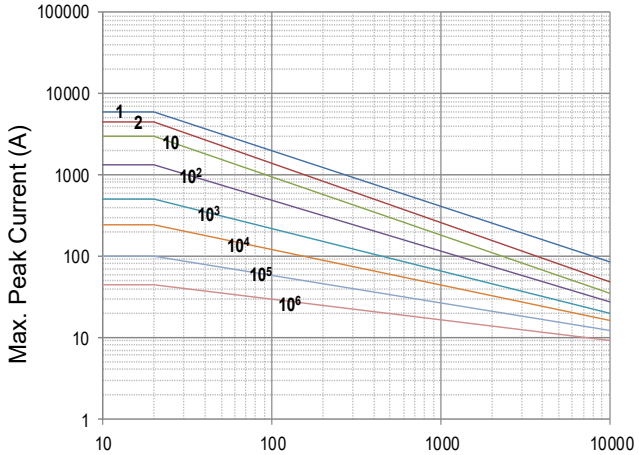

Impulse Duration (μs)
SFV25D470KM to SFV25D680KM

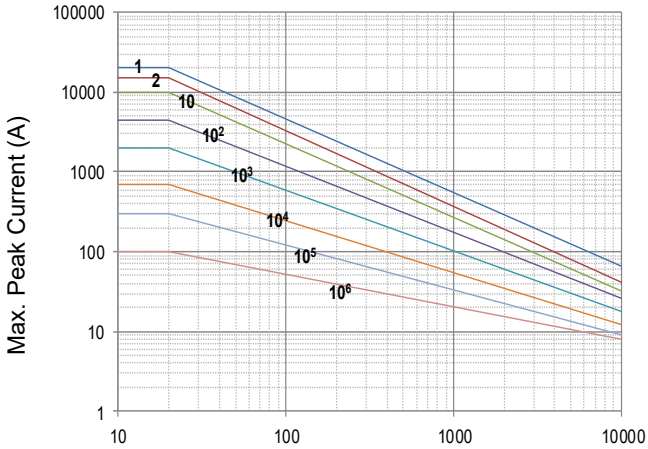

Impulse Duration (μs)
SFV25D820KM to SFV25D122KM

Note: 1, 2, 10, 10^2, 10^3, 10^4, 10^5, 10^6 Stand for Repetitions.

- Voltage-Current Characteristic Curves

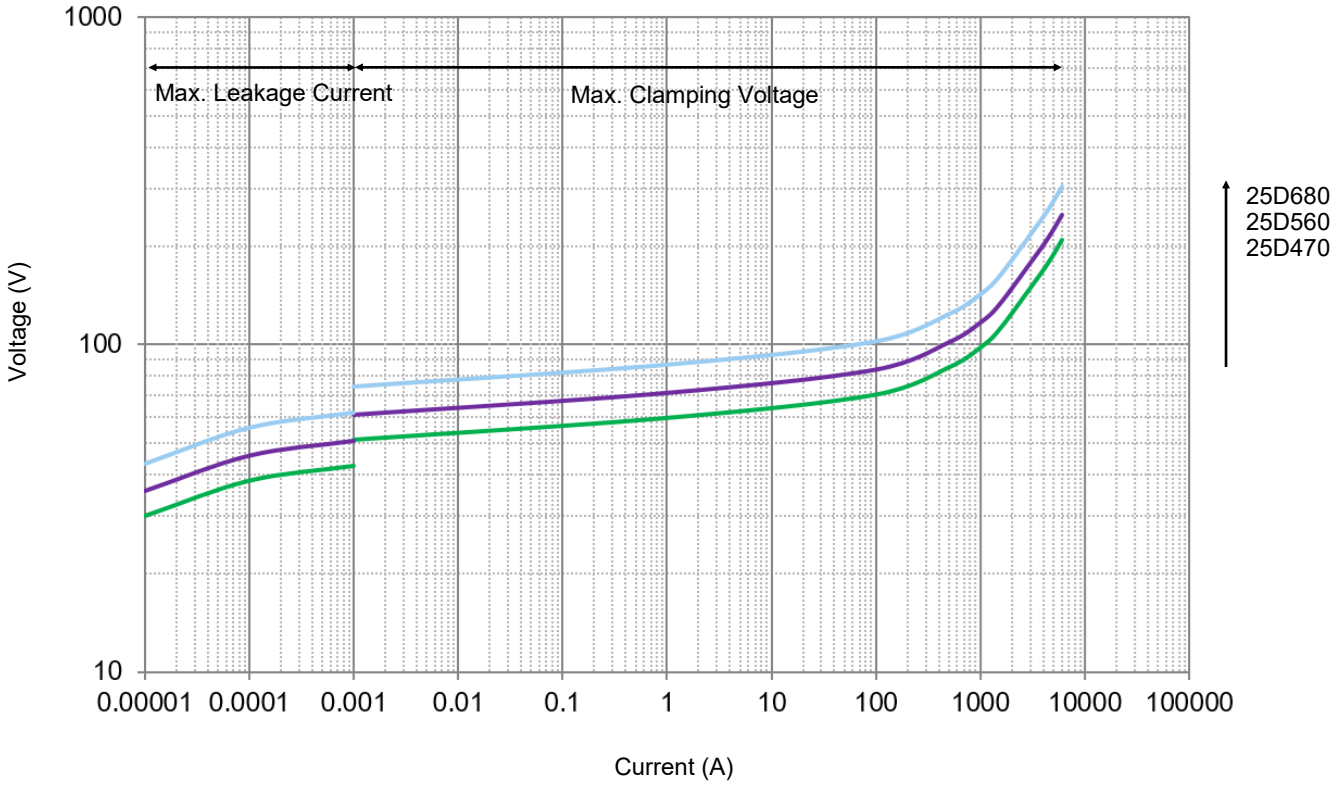

All Rights Reserved by Xiamen SET Electronics Co., Ltd. 2024-2026 V1.1

- Voltage-Current Characteristic Curves

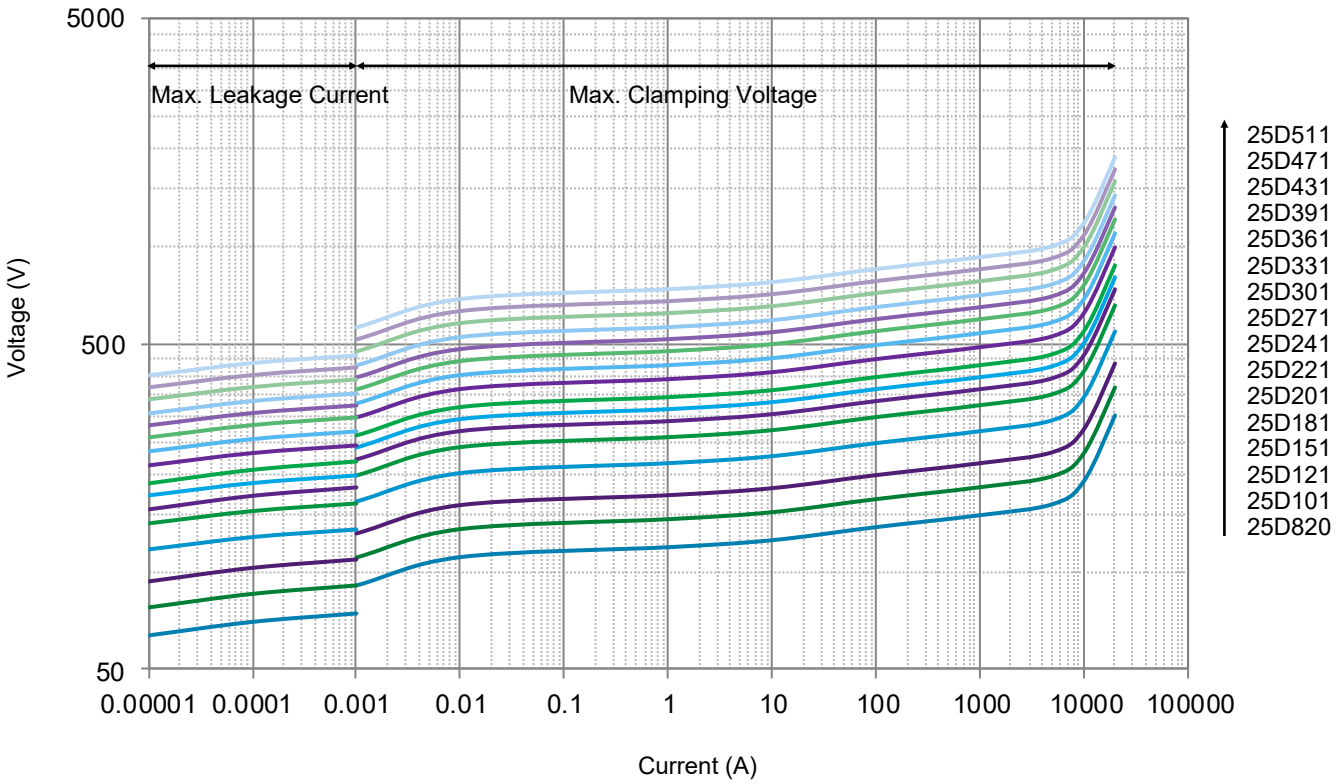

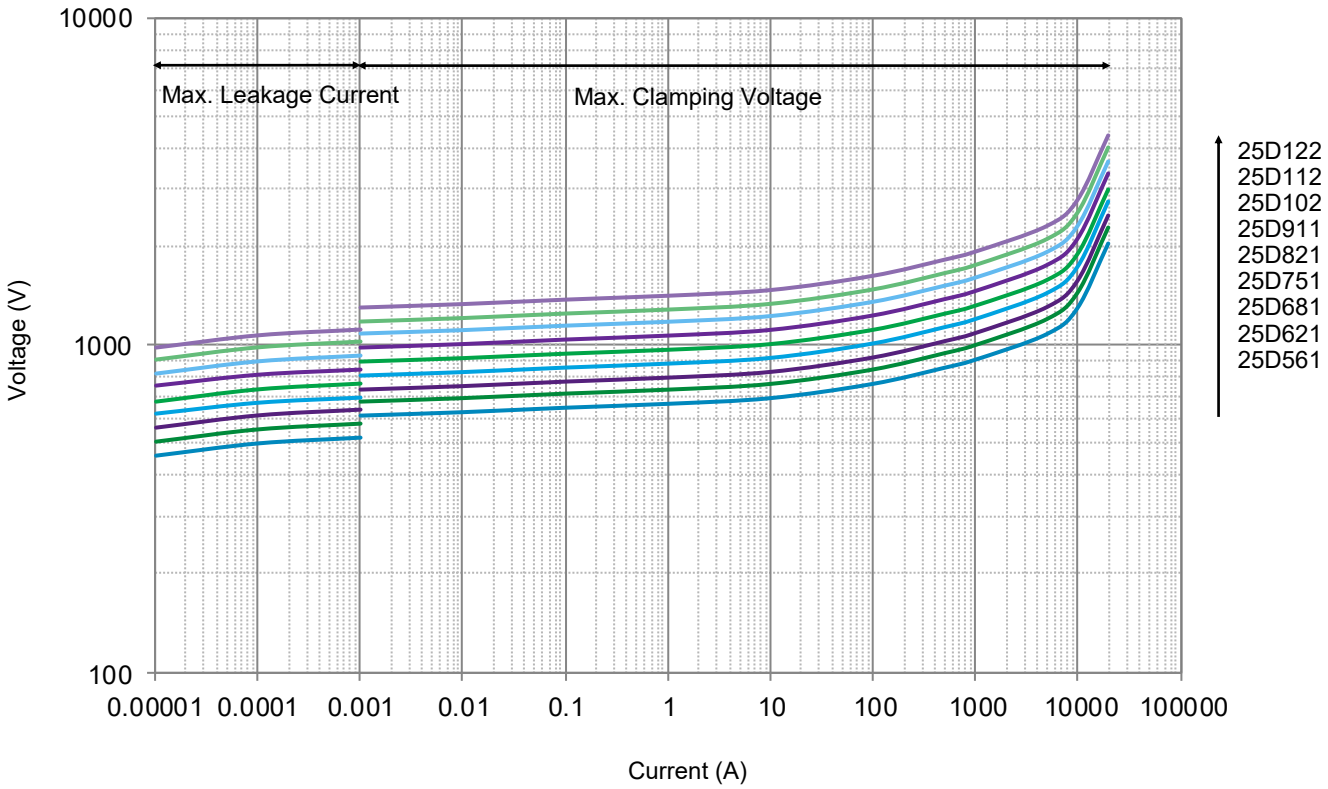

All Rights Reserved by Xiamen SET Electronics Co., Ltd. 2024-2026 V1.1

Packaging Information

- Bulk Packaging (Code: BUL)
- Bulk Packaging Quantity & Weight.

Series	Nominal Varistor Voltage	PE Bag	Box	Carton	G. W / Carton (365 × 265 × 245)
	(V)	(PCS)	(PCS)	(PCS)	(kg)±10%
SFV25D M Series	470 ~ 621	100	200	1200	7 ~ 15
	681 ~ 122	80	160	960	13 ~ 21

Note:
Other lead length packaging information, please contact SETsafe | SETfuse.

All Dimensions in mm

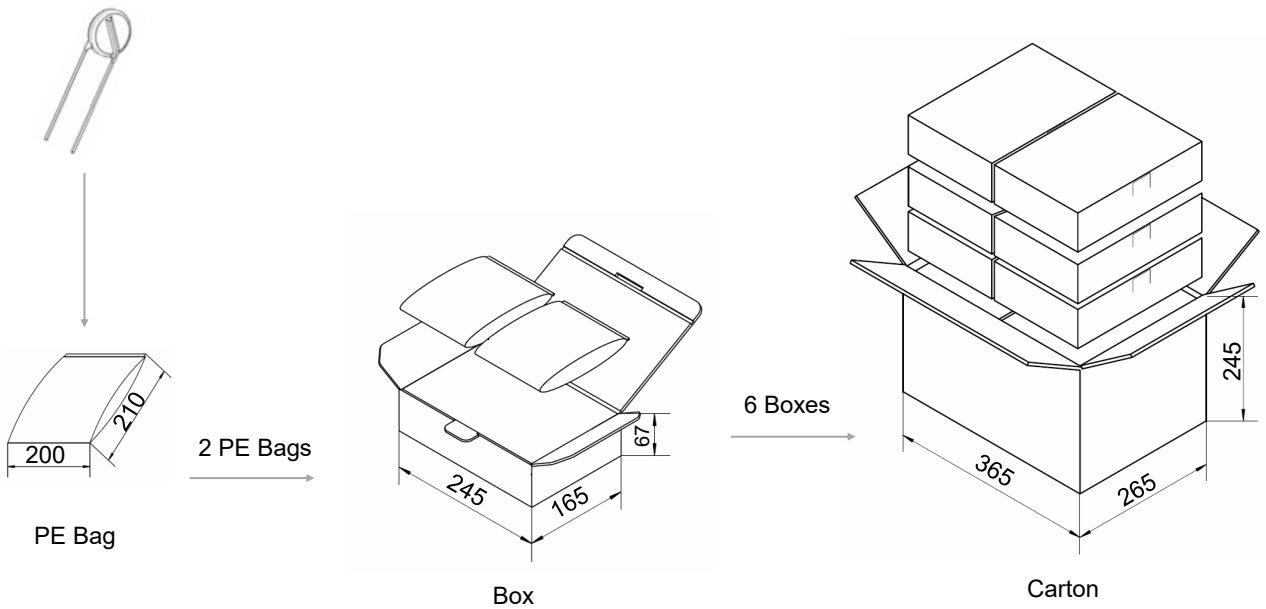

All Rights Reserved by Xiamen SET Electronics Co., Ltd. 2024-2026 V1.1

Dimensions (mm)

Model	L (Min.)	H (Max.)	T (Max.)	D (Max.)	d	F	F_1	A (Max.)
SFV7D220KT	7	12	4.5	9.0	0.60±0.05	5.0±0.5	1.0 ~ 2.3	13.5
SFV7D270KT	7	12	4.8	9.0	0.60±0.05	5.0±0.5	1.1 ~ 2.5	13.5
SFV7D330KT	7	12	5.1	9.0	0.60±0.05	5.0±0.5	1.2 ~ 2.7	13.5
SFV7D390KT	7	12	5.4	9.0	0.60±0.05	5.0±0.5	1.3 ~ 2.9	13.5
SFV7D470KT	7	12	4.6	9.0	0.60±0.05	5.0±0.5	1.1 ~ 2.5	13.5
SFV7D560KT	7	12	4.8	9.0	0.60±0.05	5.0±0.5	1.2 ~ 2.7	13.5
SFV7D680KT	7	12	5.1	9.0	0.60±0.05	5.0±0.5	1.4 - 3.0	13.5
SFV7D820KT	7	12	4.4	9.0	0.60±0.05	5.0±0.5	1.1 ~ 2.4	13.5
SFV7D101KT	7	12	4.6	9.0	0.60±0.05	5.0±0.5	1.2 ~ 2.6	13.5
SFV7D121KT	7	12	4.8	9.0	0.60±0.05	5.0±0.5	1.3 ~ 2.8	13.5
SFV7D151KT	7	12	5.1	9.0	0.60±0.05	5.0±0.5	1.4 ~ 3.1	13.5
SFV7D181KT	7	12	4.1	9.0	0.60±0.05	5.0±0.5	1.0 ~ 2.4	13.5
SFV7D201KT	7	12	4.2	9.0	0.60±0.05	5.0±0.5	1.1 ~ 2.5	13.5
SFV7D221KT	7	12	4.3	9.0	0.60±0.05	5.0±0.5	1.2 ~ 2.6	13.5
SFV7D241KT	7	12	4.4	9.0	0.60±0.05	5.0±0.5	1.3 ~ 2.7	13.5
SFV7D271KT	7	12	4.5	9.0	0.60±0.05	5.0±0.5	1.4 ~ 2.9	13.5
SFV7D301KT	7	12	4.7	9.0	0.60±0.05	5.0±0.5	1.5 ~ 3.0	13.5
SFV7D331KT	7	12	4.9	9.0	0.60±0.05	5.0±0.5	1.6 ~ 3.1	13.5
SFV7D361KT	7	12	5.0	9.0	0.60±0.05	5.0±0.5	1.7 ~ 3.3	13.5
SFV7D391KT	7	12	5.2	9.0	0.60±0.05	5.0±0.5	1.8 ~ 3.4	13.5
SFV7D431KT	7	12	5.4	9.0	0.60±0.05	5.0±0.5	2.0 ~ 3.6	13.5
SFV7D471KT	7	12	5.7	9.0	0.60±0.05	5.0±0.5	2.0 ~ 3.8	13.5
SFV7D511KT	7	12	5.9	9.0	0.60±0.05	5.0±0.5	2.0 ~ 4.0	13.5
SFV7D561KT	7	12	6.2	9.0	0.60±0.05	5.0±0.5	2.2 ~ 4.2	13.5
SFV7D621KT	7	12	6.5	9.0	0.60±0.05	5.0±0.5	2.5 ~ 4.5	13.5
SFV7D681KT	7	12	6.8	9.0	0.60±0.05	5.0±0.5	2.8 ~ 4.8	13.5
SFV7D751KT	7	12	7.2	9.0	0.60±0.05	5.0±0.5	3.1 ~ 5.1	13.5
SFV7D821KT	7	12	7.6	9.0	0.60±0.05	5.0±0.5	3.4 ~ 5.4	13.5

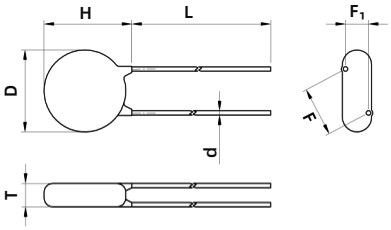

Straight Lead (A)

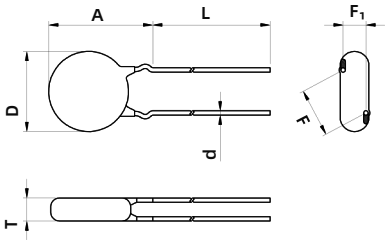

Outward Crimp (C)

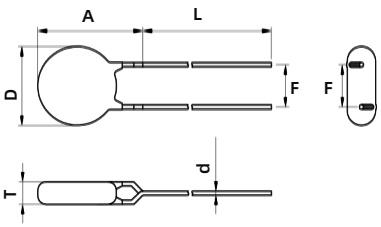

Inline Crimp (D)

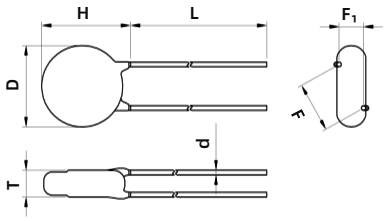

Little Straight Lead (I)

Note:
The above data is for reference only.

All Rights Reserved by Xiamen SET Electronics Co., Ltd. 2024-2026 V1.1

Specification

Model	Surge Level	Max. Continuous Operating Voltage		Varistor Voltage @1 mA DC		Clamping Voltage (Max.)		Max. Peak Current (1 time, 8/20 μs)	Max. Energy (10/1000 μs)	Typical Capacitance (For reference only) @1 kHz	Agency Information			
		VAC	VDC	Min.	Max.	V_C	I_P	S		(pF)				
		(V)	(V)	(V)	(V)	(V)	(A)	(kA)	(J)		UL	cUL	TUV	CQC
SFV7D220KT	S	14	18	20	24	43	2.5	0.25	1.1	2300	○	○	●	●
SFV7D270KT	S	17	22	24	31	53	2.5	0.25	1.4	1800	○	○	●	●
SFV7D330KT	S	20	26	30	36	65	2.5	0.25	1.7	1500	○	○	●	●
SFV7D390KT	S	25	31	35	43	77	2.5	0.25	2.1	1300	○	○	●	●
SFV7D470KT	S	30	38	42	52	93	2.5	0.25	2.5	1100	○	○	●	●
SFV7D560KT	S	35	45	50	62	110	2.5	0.25	3.1	890	○	○	●	●
SFV7D680KT	S	40	56	61	75	135	2.5	0.25	3.6	740	○	○	●	●
SFV7D820KT	S	50	65	74	90	135	10	1.25	5.5	600	○	○	●	●
SFV7D101KT	S	60	85	90	110	165	10	1.25	6.5	500	○	○	●	●
SFV7D121KT	S	75	100	108	132	200	10	1.25	7.8	420	○	○	●	●
SFV7D151KT	S	95	125	135	165	250	10	1.25	9.7	330	○	○	●	●
SFV7D181KT	S	115	150	162	198	300	10	1.25	11.7	280	○	○	●	●
SFV7D201KT	S	130	170	180	220	340	10	1.25	13	250	●	●	●	●
SFV7D221KT	S	140	180	198	242	360	10	1.25	14	230	●	●	●	●
SFV7D241KT	S	150	200	216	264	395	10	1.25	15	210	●	●	●	●
SFV7D271KT	S	175	225	243	297	455	10	1.25	18	185	●	●	●	●
SFV7D301KT	S	190	250	270	330	500	10	1.25	20	165	●	●	●	●
SFV7D331KT	S	210	275	297	363	550	10	1.25	23	150	●	●	●	●
SFV7D361KT	S	230	300	324	396	595	10	1.25	25	140	●	●	●	●
SFV7D391KT	S	250	320	351	429	650	10	1.25	25	130	●	●	●	●
SFV7D431KT	S	275	350	387	473	710	10	1.25	28	115	●	●	●	●
SFV7D471KT	S	300	385	423	517	775	10	1.25	30	105	●	●	●	●
SFV7D511KT	S	320	415	459	561	845	10	1.25	30	100	●	●	●	●
SFV7D561KT	S	350	460	504	616	925	10	1.25	30	90	●	●	●	●
SFV7D621KT	S	385	505	558	682	1025	10	1.25	33	80	●	●	●	●
SFV7D681KT	S	420	560	612	748	1120	10	1.25	33	75	●	●	●	●
SFV7D751KT	S	460	615	675	825	1240	10	1.25	38	70	○	○	●	●
SFV7D821KT	S	510	670	738	902	1355	10	1.25	42	65	○	○	●	●

●: Approved ○: Unauthorized ● RoHS & REACH Compliant

All Rights Reserved by Xiamen SET Electronics Co., Ltd. 2024-2026 V1.1

Specification

Model	Surge Level	Max. Continuous Operating Voltage		Varistor Voltage @1 mA DC		Clamping Voltage (Max.)		Max. Peak Current (1 time, 8/20 μs)	Max. Energy (10/1000 μs)	Typical Capacitance (For reference only) @1 kHz	Agency Information			
		VAC	VDC	Min.	Max.	V_C	I_P	K		(pF)	UL	cUL	TUV	CQC
		(V)	(V)	(V)	(V)	(V)	(A)	(kA)	(J)					
SFV7D220KT	K	14	18	20	24	43	2.5	0.5	1.3	2300	○	○	●	●
SFV7D270KT	K	17	22	24	31	53	2.5	0.5	1.6	1800	○	○	●	●
SFV7D330KT	K	20	26	30	36	65	2.5	0.5	2.0	1500	○	○	●	●
SFV7D390KT	K	25	31	35	43	77	2.5	0.5	2.4	1300	○	○	●	●
SFV7D470KT	K	30	38	42	52	93	2.5	0.5	2.8	1100	○	○	●	●
SFV7D560KT	K	35	45	50	62	110	2.5	0.5	3.4	890	○	○	●	●
SFV7D680KT	K	40	56	61	75	135	2.5	0.5	4.1	740	○	○	●	●
SFV7D820KT	K	50	65	74	90	135	10	1.75	7.0	600	○	○	●	●
SFV7D101KT	K	60	85	90	110	165	10	1.75	8.5	500	○	○	●	●
SFV7D121KT	K	75	100	108	132	200	10	1.75	10	420	○	○	●	●
SFV7D151KT	K	95	125	135	165	250	10	1.75	13	330	○	○	●	●
SFV7D181KT	K	115	150	162	198	300	10	1.75	15	280	○	○	●	●
SFV7D201KT	K	130	170	180	220	340	10	1.75	17.5	250	●	●	●	●
SFV7D221KT	K	140	180	198	242	360	10	1.75	19	230	●	●	●	●
SFV7D241KT	K	150	200	216	264	395	10	1.75	21	210	●	●	●	●
SFV7D271KT	K	175	225	243	297	455	10	1.75	24	185	●	●	●	●
SFV7D301KT	K	190	250	270	330	500	10	1.75	26	165	●	●	●	●
SFV7D331KT	K	210	275	297	363	550	10	1.75	28	150	●	●	●	●
SFV7D361KT	K	230	300	324	396	595	10	1.75	32	140	●	●	●	●
SFV7D391KT	K	250	320	351	429	650	10	1.75	35	130	●	●	●	●
SFV7D431KT	K	275	350	387	473	710	10	1.75	40	115	●	●	●	●
SFV7D471KT	K	300	385	423	517	775	10	1.75	42	105	●	●	●	●
SFV7D511KT	K	320	415	459	561	845	10	1.75	45	100	●	●	●	●
SFV7D561KT	K	350	460	504	616	925	10	1.75	49	90	●	●	●	●
SFV7D621KT	K	385	505	558	682	1025	10	1.75	55	80	●	●	●	●
SFV7D681KT	K	420	560	612	748	1120	10	1.75	60	75	●	●	●	●
SFV7D751KT	K	460	615	675	825	1240	10	1.75	66	70	○	○	●	●
SFV7D821KT	K	510	670	738	902	1355	10	1.75	71	65	○	○	●	●

●: Approved ○: Unauthorized ● RoHS & REACH Compliant

All Rights Reserved by Xiamen SET Electronics Co., Ltd. 2024-2026 V1.1

Performance Curve (For reference only)

- Max. Peak Current Derating Curves

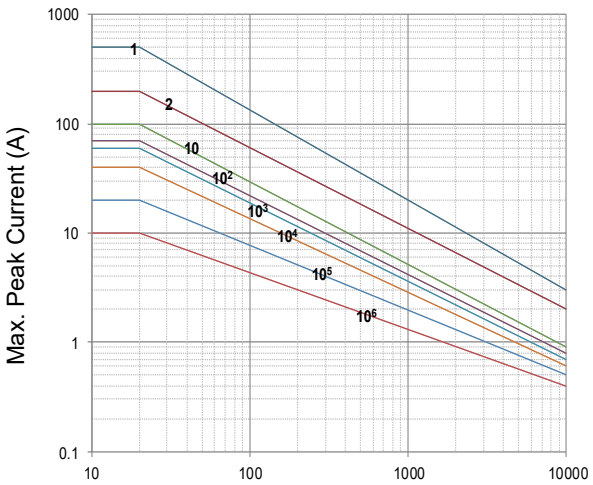

Impulse Duration (μs)

SFV7D220KT to SFV7D680KT

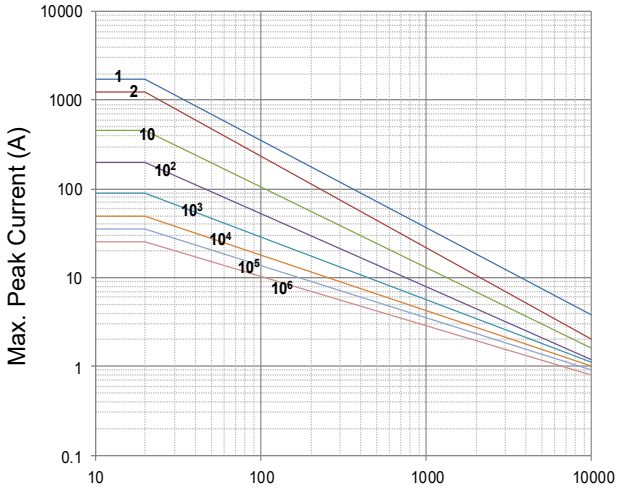

Impulse Duration (μs)

SFV7D820KT to SFV7D821KT

Note: 1, 2, 10, 10^2, 10^3, 10^4, 10^5, 10^6 Stand for Repetitions.

- Voltage-Current Characteristic Curves

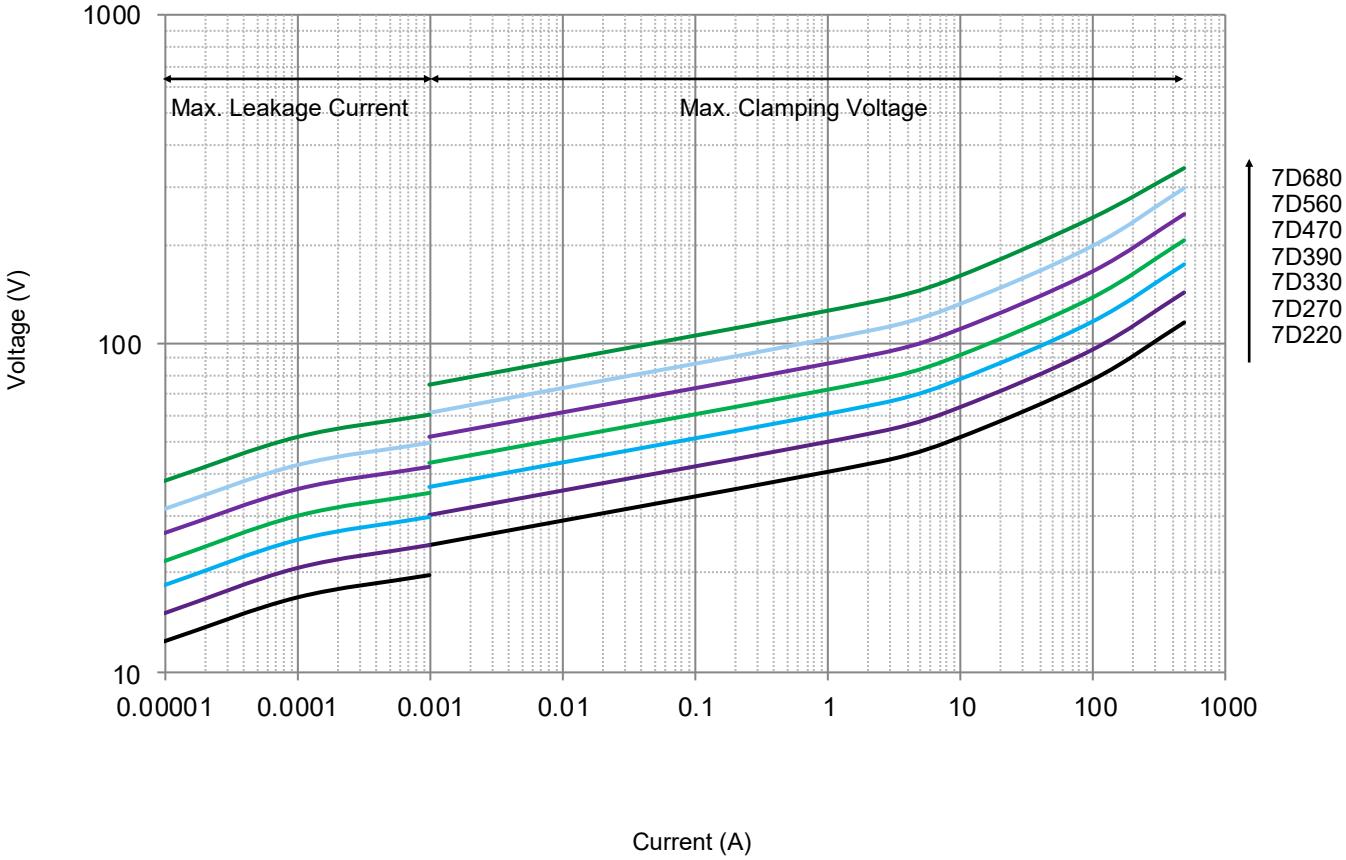

All Rights Reserved by Xiamen SET Electronics Co., Ltd. 2024-2026 V1.1

- Voltage-Current Characteristic Curves

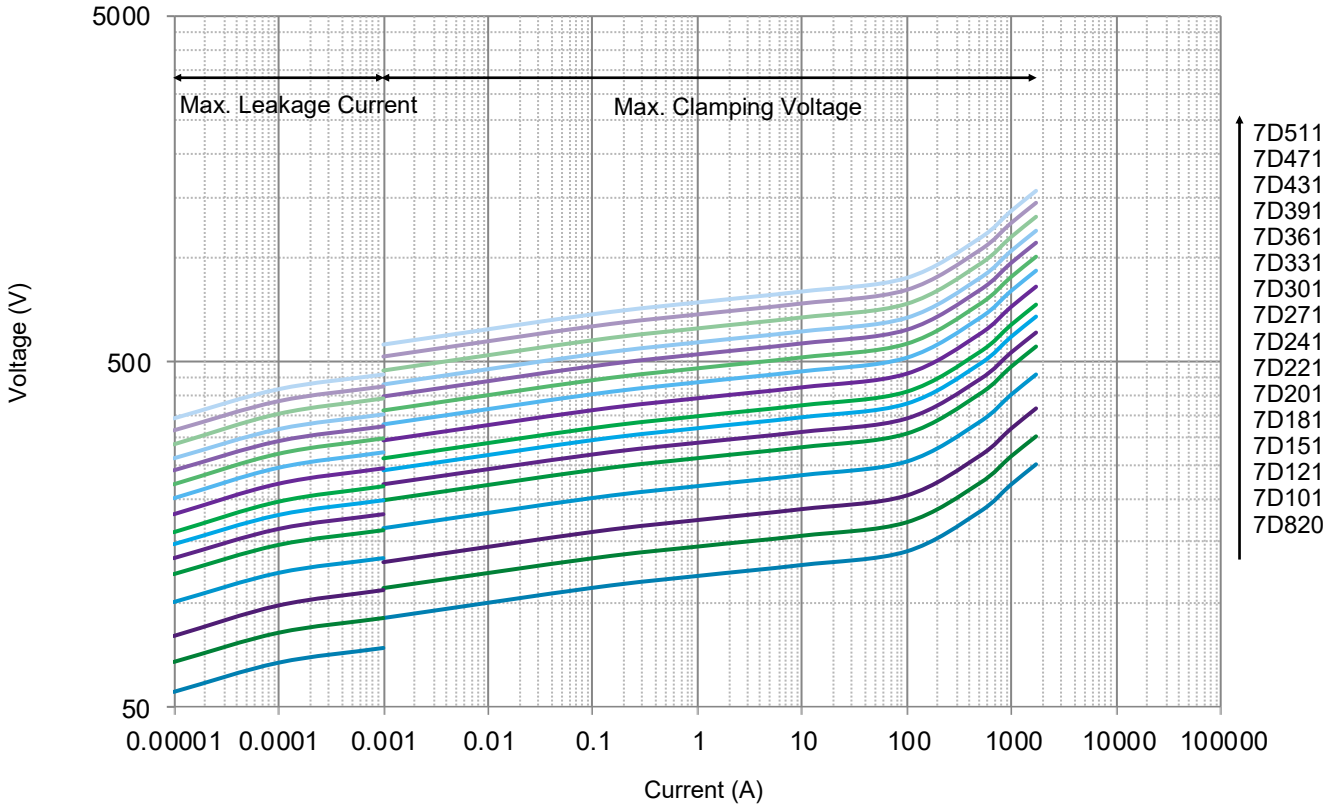

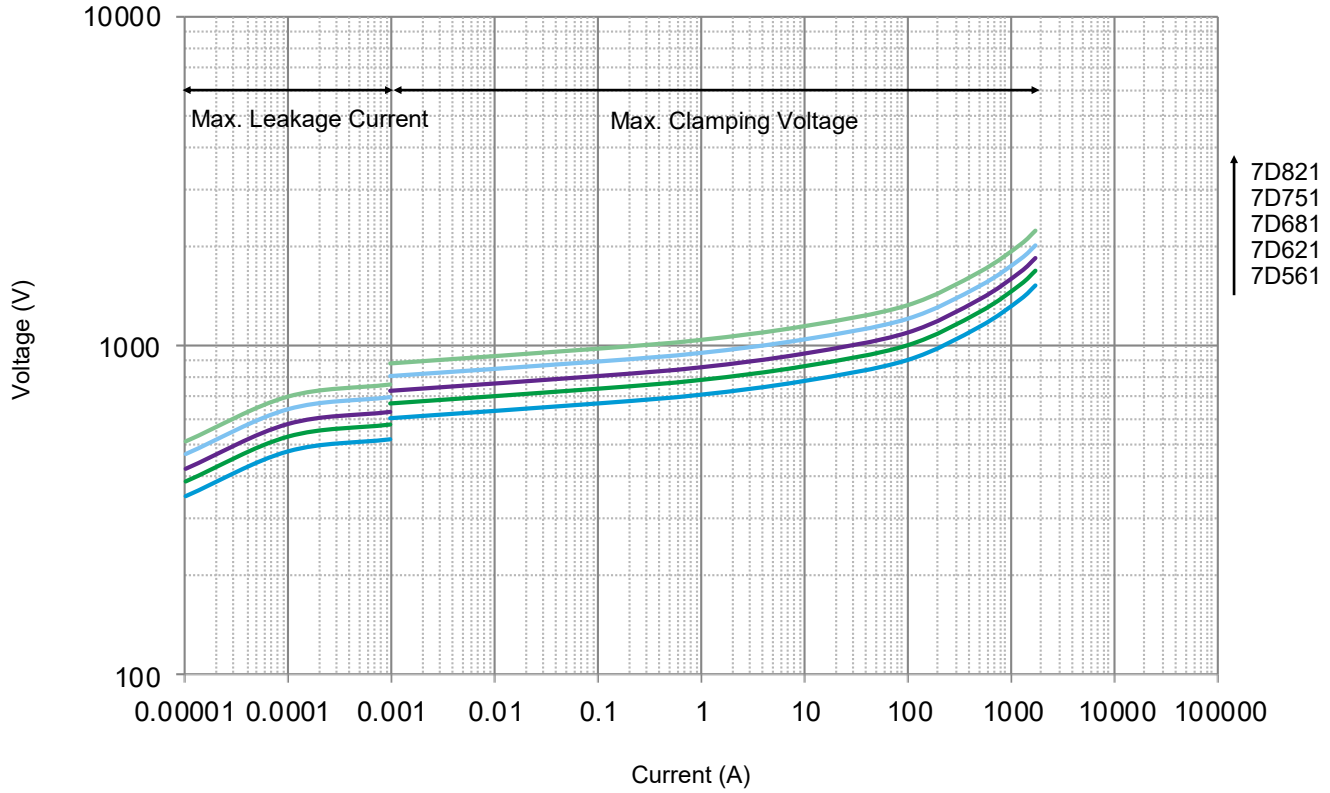

All Rights Reserved by Xiamen SET Electronics Co., Ltd. 2024-2026 V1.1

Packaging Information

- Bulk Packaging (Code: BUL)
- Bulk Packaging Quantity & Weight.

Series	Nominal Varistor Voltage	PE Bag	Box	Carton	G. W / Carton (365 × 265 × 245)
	(V)	(PCS)	(PCS)	(PCS)	(kg)±10%
SFV7D T Series	220 ~ 471	500	1000	6000	3 ~ 6
	511 ~ 821	400	800	4800	4 ~ 7

Note:
Other lead length packaging information, please contact SETsafe | SETfuse.

All Dimensions in mm

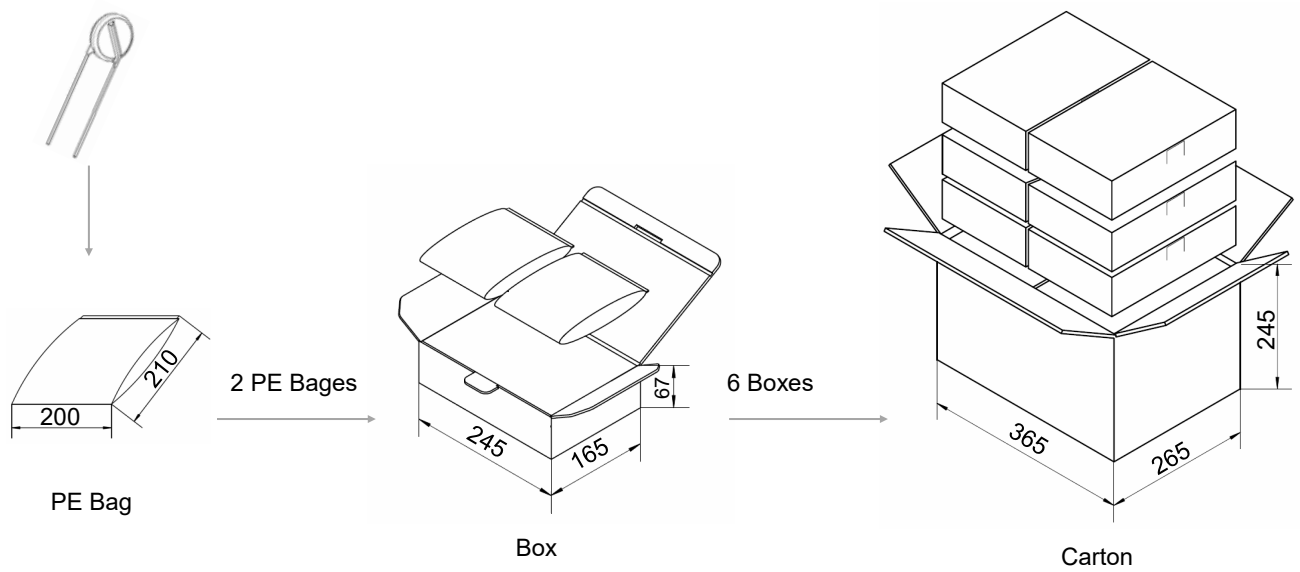

All Rights Reserved by Xiamen SET Electronics Co., Ltd. 2024-2026 V1.1

Packaging Information

- Tape Packaging (Code: 0AB)

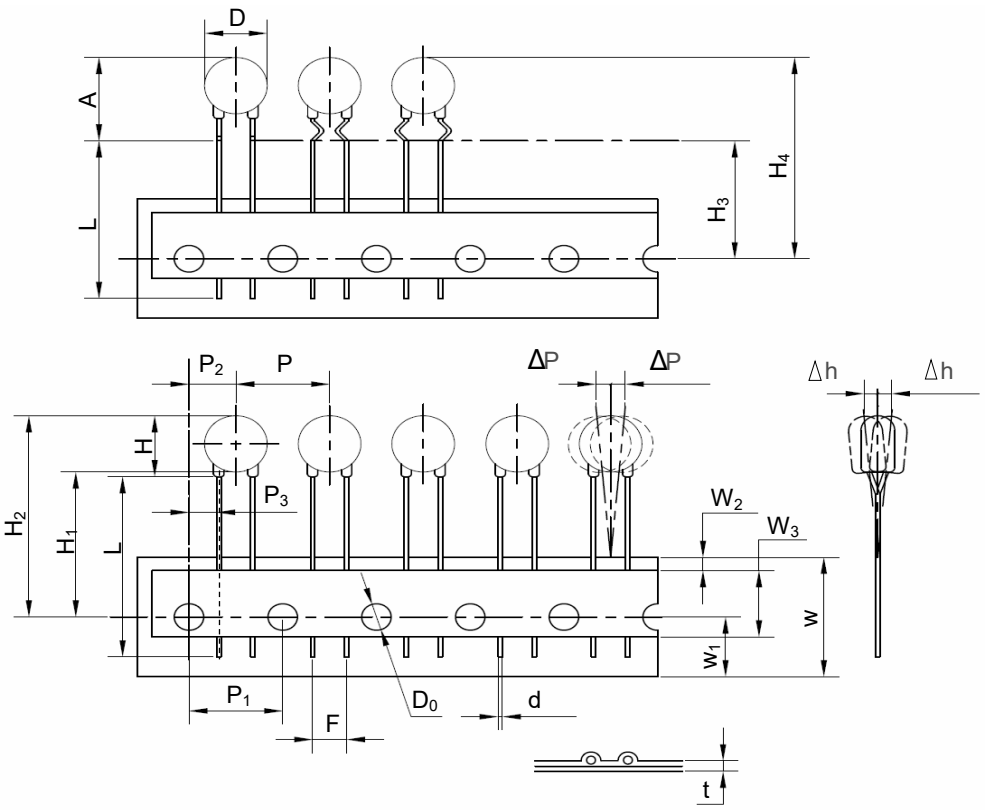

Dimensions (mm)	
P	12.7±1.0
P_1	12.7±0.3
P_2	6.35±1.30
P_3	3.85±1.00
ΔP(max.)	1.0
W	18.0±2.0
W_1	9.0±1.0
W_2(max.)	3.0
W_3	10.0±2.0
H(max.)	12.0
H_1	18.0
H_2(max.)	$32.0^{+2.0}_{-0}$
H_3	18.0
H_4(max.)	$33.0^{+2.0}_{-0}$
Δh(max.)	2.0
t (max.)	0.6
D(max.)	9.0
D_0	4.0±0.2
d	0.60±0.05
A(max.)	12.5
F	5.0±0.5
L(min.)	/

- Tape Packaging Quantity & Weight.

Series	Nominal Varistor Voltage	Box	Carton	G. W / Carton (365 × 265 × 415)
7D	(V)	(PCS)	(PCS)	(kg)±10%
	751 ~ 821	700	4900	6 ~ 7
	511 ~ 681	800	5600	5 ~ 7
	331 ~ 471	1000	7000	5 ~ 7
	390 ~ 301	1200	8400	5 ~ 6
	220 ~ 330	1500	10500	5 ~ 6

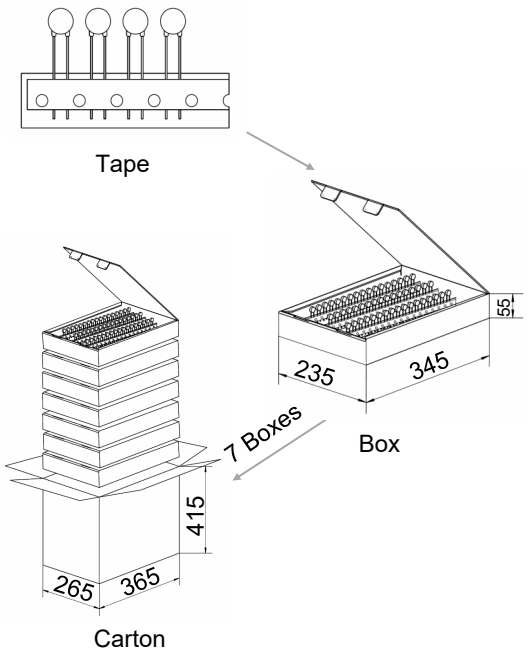

All Rights Reserved by Xiamen SET Electronics Co., Ltd. 2024-2026 V1.1

Packaging Information

- Reel Packaging (Code:0AR)

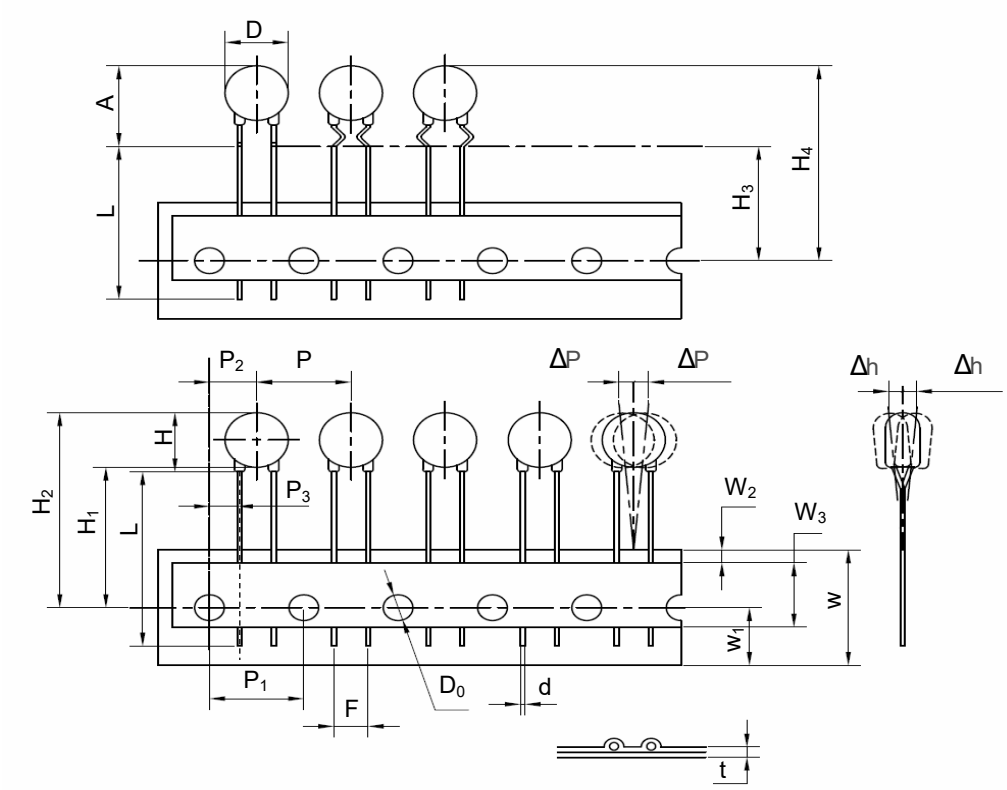

Dimensions (mm)	
P	12.7±1.0
P_1	12.7±0.3
P_2	6.35±1.30
P_3	3.85±1.00
ΔP(max.)	1.0
W	18.0±1.0
W_1	9.0±1.0
W_2(max.)	3.0
W_3	10.0±2.0
H(max.)	12.0
H_1	18.0
H_2(max.)	$32.0^{+2.0}_{-0}$
H_3	18.0
H_4(max.)	$33.0^{+2.0}_{-0}$
Δh(max.)	2.0
t (max.)	0.6
D(max.)	9.0
D_0	4.0±0.2
d	0.60±0.05
A(max.)	12.5
F	5.0±0.5
L(min.)	/

- Reel Packaging Quantity & Weight.

Series	Nominal Varistor Voltage	Box	Carton	G. W / Carton (375 × 335 × 385)
	(V)	(PCS)	(PCS)	(kg)±10%
7D	220 ~ 391	1500	7500	3 ~ 6
	431 ~ 821	1000	5000	4 ~ 7

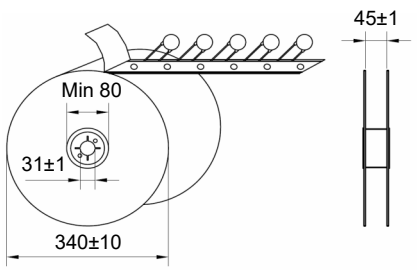

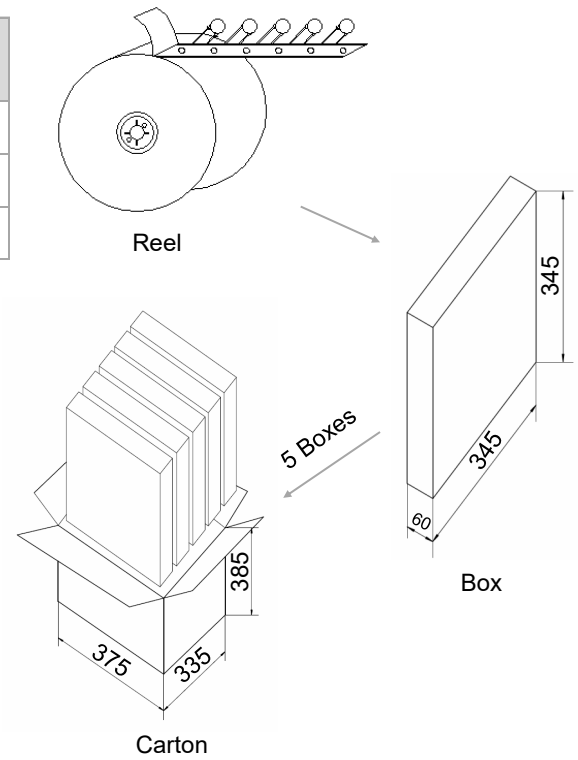

All Rights Reserved by Xiamen SET Electronics Co., Ltd. 2024-2026 V1.1

Dimensions (mm)

Model	L (Min.)	H (Max.)	T (Max.)	D (Max.)	d	F	F_1	A (Max.)
SFV10D220KT	7	15.5	4.9	12.5	0.80±0.05	7.5±0.5	1.1 ~ 2.5	17.5
SFV10D270KT	7	15.5	5.2	12.5	0.80±0.05	7.5±0.5	1.2 ~ 2.7	17.5
SFV10D330KT	7	15.5	5.5	12.5	0.80±0.05	7.5±0.5	1.3 ~ 2.9	17.5
SFV10D390KT	7	15.5	5.8	12.5	0.80±0.05	7.5±0.5	1.4 ~ 3.1	17.5
SFV10D470KT	7	15.5	5.0	12.5	0.80±0.05	7.5±0.5	1.2 ~ 2.7	17.5
SFV10D560KT	7	15.5	5.2	12.5	0.80±0.05	7.5±0.5	1.3 ~ 2.9	17.5
SFV10D680KT	7	15.5	5.5	12.5	0.80±0.05	7.5±0.5	1.5 ~ 3.2	17.5
SFV10D820KT	7	15.5	4.8	12.5	0.80±0.05	7.5±0.5	1.2 ~ 2.6	17.5
SFV10D101KT	7	15.5	5.0	12.5	0.80±0.05	7.5±0.5	1.3 ~ 2.8	17.5
SFV10D121KT	7	15.5	5.2	12.5	0.80±0.05	7.5±0.5	1.4 ~ 3.0	17.5
SFV10D151KT	7	15.5	5.5	12.5	0.80±0.05	7.5±0.5	1.6 ~ 3.3	17.5
SFV10D181KT	7	15.5	4.8	12.5	0.80±0.05	7.5±0.5	1.0 ~ 2.6	17.5
SFV10D201KT	7	15.5	5.0	12.5	0.80±0.05	7.5±0.5	1.1 ~ 2.7	17.5
SFV10D221KT	7	15.5	5.1	12.5	0.80±0.05	7.5±0.5	1.2 - 2.8	17.5
SFV10D241KT	7	15.5	5.2	12.5	0.80±0.05	7.5±0.5	1.3 ~ 2.9	17.5
SFV10D271KT	7	15.5	5.3	12.5	0.80±0.05	7.5±0.5	1.4 ~ 3.1	17.5
SFV10D301KT	7	15.5	5.5	12.5	0.80±0.05	7.5±0.5	1.5 ~ 3.2	17.5
SFV10D331KT	7	15.5	5.7	12.5	0.80±0.05	7.5±0.5	1.6 ~ 3.3	17.5
SFV10D361KT	7	15.5	5.8	12.5	0.80±0.05	7.5±0.5	1.7 ~ 3.5	17.5
SFV10D391KT	7	15.5	6.0	12.5	0.80±0.05	7.5±0.5	1.8 ~ 3.6	17.5
SFV10D431KT	7	15.5	6.2	12.5	0.80±0.05	7.5±0.5	1.8 ~ 3.8	17.5
SFV10D471KT	7	15.5	6.5	12.5	0.80±0.05	7.5±0.5	2.0 ~ 4.0	17.5
SFV10D511KT	7	15.5	6.7	12.5	0.80±0.05	7.5±0.5	2.2 ~ 4.2	17.5
SFV10D561KT	7	15.5	7.0	12.5	0.80±0.05	7.5±0.5	2.4 ~ 4.4	17.5
SFV10D621KT	7	15.5	7.3	12.5	0.80±0.05	7.5±0.5	2.7 ~ 4.7	17.5
SFV10D681KT	7	15.5	7.6	12.5	0.80±0.05	7.5±0.5	3.0 ~ 5.0	17.5
SFV10D751KT	7	15.5	8.0	12.5	0.80±0.05	7.5±0.5	3.3 ~ 5.3	17.5
SFV10D821KT	7	15.5	8.4	12.5	0.80±0.05	7.5±0.5	3.6 ~ 5.6	17.5
SFV10D911KT	7	15.5	8.9	12.5	0.80±0.05	7.5±0.5	4.0 ~ 6.0	17.5
SFV10D102KT	7	15.5	9.4	12.5	0.80±0.05	7.5±0.5	4.5 ~ 6.5	17.5
SFV10D112KT	7	15.5	10.0	12.5	0.80±0.05	7.5±0.5	4.9 ~ 6.9	17.5
SFV10D122KT	7	15.5	10.5	12.5	0.80±0.05	7.5±0.5	5.4 ~ 7.4	17.5

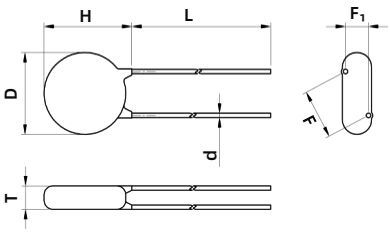

Straight Lead (A)

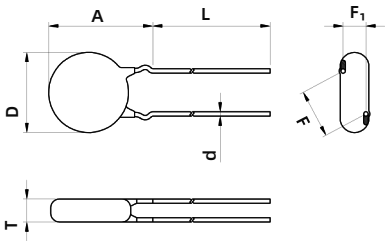

Outward Crimp (C)

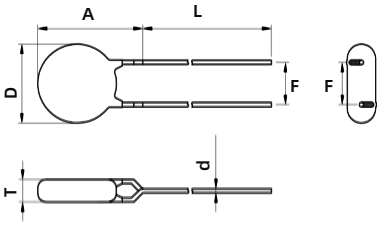

Inline Crimp (D)

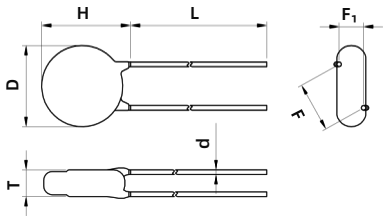

Little Straight Lead (I)

Note:
The above data is for reference only.

All Rights Reserved by Xiamen SET Electronics Co., Ltd. 2024-2026 V1.1

Specification

Model	Surge Level	Max. Continuous Operating Voltage		Varistor Voltage @1 mA DC		Clamping Voltage (Max.)		Max. Peak Current (1 time, 8/20 μs)	Max. Energy (10/1000 μs)	Typical Capacitance (For reference only) @1 kHz	Agency Information			
		VAC	VDC	Min.	Max.	V_C	I_P	S		(pF)	UL	cUL	TUV	CQC
		(V)	(V)	(V)	(V)	(V)	(A)	(kA)	(J)					
SFV10D220KT	S	14	18	20	24	43	5	0.5	2.5	4500	○	○	●	●
SFV10D270KT	S	17	22	24	31	53	5	0.5	3.0	3700	○	○	●	●
SFV10D330KT	S	20	26	30	36	65	5	0.5	4.0	3000	○	○	●	●
SFV10D390KT	S	25	31	35	43	77	5	0.5	4.6	2400	○	○	●	●
SFV10D470KT	S	30	38	42	52	93	5	0.5	5.5	2100	○	○	●	●
SFV10D560KT	S	35	45	50	62	110	5	0.5	7.0	1800	○	○	●	●
SFV10D680KT	S	40	56	61	75	135	5	0.5	8.2	1500	○	○	●	●
SFV10D820KT	S	50	65	74	90	135	25	2.5	12	1200	○	○	●	●
SFV10D101KT	S	60	85	90	110	165	25	2.5	15	1000	○	○	●	●
SFV10D121KT	S	75	100	108	132	200	25	2.5	18	830	○	○	●	●
SFV10D151KT	S	95	125	135	165	250	25	2.5	22	670	○	○	●	●
SFV10D181KT	S	115	150	162	198	300	25	2.5	27	560	○	○	●	●
SFV10D201KT	S	130	170	180	220	340	25	2.5	30	500	●	●	●	●
SFV10D221KT	S	140	180	198	242	360	25	2.5	32	450	●	●	●	●
SFV10D241KT	S	150	200	216	264	395	25	2.5	35	420	●	●	●	●
SFV10D271KT	S	175	225	243	297	455	25	2.5	40	370	●	●	●	●
SFV10D301KT	S	190	250	270	330	500	25	2.5	40	330	●	●	●	●
SFV10D331KT	S	210	275	297	363	550	25	2.5	43	300	●	●	●	●
SFV10D361KT	S	230	300	324	396	595	25	2.5	47	280	●	●	●	●
SFV10D391KT	S	250	320	351	429	650	25	2.5	60	260	●	●	●	●
SFV10D431KT	S	275	350	387	473	710	25	2.5	65	230	●	●	●	●
SFV10D471KT	S	300	385	423	517	775	25	2.5	70	210	●	●	●	●
SFV10D511KT	S	320	415	459	561	845	25	2.5	70	200	●	●	●	●
SFV10D561KT	S	350	460	504	616	925	25	2.5	70	180	●	●	●	●
SFV10D621KT	S	385	505	558	682	1025	25	2.5	70	160	●	●	●	●
SFV10D681KT	S	420	560	612	748	1120	25	2.5	70	150	●	●	●	●
SFV10D751KT	S	460	615	675	825	1240	25	2.5	75	130	●	●	●	●
SFV10D821KT	S	510	670	738	902	1355	25	2.5	85	120	●	●	●	●
SFV10D911KT	S	550	745	819	1001	1500	25	2.5	93	110	○	○	●	●
SFV10D102KT	S	625	825	900	1100	1650	25	2.5	102	100	○	○	●	●
SFV10D112KT	S	680	895	990	1210	1815	25	2.5	115	90	○	○	●	●
SFV10D122KT	S	750	990	1080	1320	1980	25	2.5	125	55	○	○	●	●

●: Approved ○: Unauthorized ● RoHS & REACH Compliant

All Rights Reserved by Xiamen SET Electronics Co., Ltd. 2024-2026 V1.1

Specification

Model	Surge Level	Max. Continuous Operating Voltage		Varistor Voltage @1 mA DC		Clamping Voltage (Max.)		Max. Peak Current (1 time, 8/20 μs)	Max. Energy (10/1000 μs)	Typical Capacitance (For reference only) @1 kHz	Agency Information			
		VAC	VDC	Min.	Max.	V_C	I_P	K		(pF)	UL	cUL	TUV	CQC
		(V)	(V)	(V)	(V)	(V)	(A)	(kA)	(J)					
SFV10D220KT	K	14	18	20	24	43	5	1	3.2	4500	○	○	●	●
SFV10D270KT	K	17	22	24	31	53	5	1	3.9	3700	○	○	●	●
SFV10D330KT	K	20	26	30	36	65	5	1	4.8	3000	○	○	●	●
SFV10D390KT	K	25	31	35	43	77	5	1	5.6	2400	○	○	●	●
SFV10D470KT	K	30	38	42	52	93	5	1	6.8	2100	○	○	●	●
SFV10D560KT	K	35	45	50	62	110	5	1	8.1	1800	○	○	●	●
SFV10D680KT	K	40	56	61	75	135	5	1	9.8	1500	○	○	●	●
SFV10D820KT	K	50	65	74	90	135	25	3.5	14	1200	○	○	●	●
SFV10D101KT	K	60	85	90	110	165	25	3.5	17	1000	○	○	●	●
SFV10D121KT	K	75	100	108	132	200	25	3.5	20	830	○	○	●	●
SFV10D151KT	K	95	125	135	165	250	25	3.5	25	670	○	○	●	●
SFV10D181KT	K	115	150	162	198	300	25	3.5	30	560	○	○	●	●
SFV10D201KT	K	130	170	180	220	340	25	3.5	35	500	●	●	●	●
SFV10D221KT	K	140	180	198	242	360	25	3.5	39	450	●	●	●	●
SFV10D241KT	K	150	200	216	264	395	25	3.5	42	420	●	●	●	●
SFV10D271KT	K	175	225	243	297	455	25	3.5	49	370	●	●	●	●
SFV10D301KT	K	190	250	270	330	500	25	3.5	54	330	●	●	●	●
SFV10D331KT	K	210	275	297	363	550	25	3.5	58	300	●	●	●	●
SFV10D361KT	K	230	300	324	396	595	25	3.5	65	280	●	●	●	●
SFV10D391KT	K	250	320	351	429	650	25	3.5	70	260	●	●	●	●
SFV10D431KT	K	275	350	387	473	710	25	3.5	80	230	●	●	●	●
SFV10D471KT	K	300	385	423	517	775	25	3.5	85	210	●	●	●	●
SFV10D511KT	K	320	415	459	561	845	25	3.5	90	200	●	●	●	●
SFV10D561KT	K	350	460	504	616	925	25	3.5	92	180	●	●	●	●
SFV10D621KT	K	385	505	558	682	1025	25	3.5	95	160	●	●	●	●
SFV10D681KT	K	420	560	612	748	1120	25	3.5	98	150	●	●	●	●
SFV10D751KT	K	460	615	675	825	1240	25	3.5	100	130	●	●	●	●
SFV10D821KT	K	510	670	738	902	1355	25	3.5	110	120	●	●	●	●
SFV10D911KT	K	550	745	819	1001	1500	25	3.5	130	110	○	○	●	●
SFV10D102KT	K	625	825	900	1100	1650	25	3.5	140	100	○	○	●	●
SFV10D112KT	K	680	895	990	1210	1815	25	3.5	155	90	○	○	●	●
SFV10D122KT	K	750	990	1080	1320	1980	25	3.5	170	55	○	○	●	●

●: Approved ○: Unauthorized ● RoHS & REACH Compliant

All Rights Reserved by Xiamen SET Electronics Co., Ltd. 2024-2026 V1.1

Specification

Model	Surge Level	Max. Continuous Operating Voltage		Varistor Voltage @1 mA DC		Clamping Voltage (Max.)		Pulse Impact Performance (40 times) (1.2/50 μs & 8/20 μs)	Max. Energy (10/1000 μs)	Typical Capacitance (For reference only) @1 kHz	Agency Information			
		VAC	VDC	Min.	Max.	V_C	I_P	Q		(pF)				
		(V)	(V)	(V)	(V)	(V)	(A)	(kV)	(J)		UL	cUL	TUV	CQC
SFV10D201KT	Q	130	170	180	220	340	25	4.5	35	500	●	●	●	●
SFV10D221KT	Q	140	180	198	242	360	25	4.5	39	450	●	●	●	●
SFV10D241KT	Q	150	200	216	264	395	25	4.5	42	420	●	●	●	●
SFV10D271KT	Q	175	225	243	297	455	25	4.5	49	370	●	●	●	●
SFV10D301KT	Q	190	250	270	330	500	25	4.5	54	330	●	●	●	●
SFV10D331KT	Q	210	275	297	363	550	25	4.5	58	300	●	●	●	●
SFV10D361KT	Q	230	300	324	396	595	25	4.5	65	280	●	●	●	●
SFV10D391KT	Q	250	320	351	429	650	25	4.5	70	260	●	●	●	●
SFV10D431KT	Q	275	350	387	473	710	25	4.5	80	230	●	●	●	●
SFV10D471KT	Q	300	385	423	517	775	25	4.5	85	210	●	●	●	●
SFV10D511KT	Q	320	415	459	561	845	25	4.5	90	200	●	●	●	●
SFV10D561KT	Q	350	460	504	616	925	25	4.5	92	180	●	●	●	●
SFV10D621KT	Q	385	505	558	682	1025	25	4.5	95	160	●	●	●	●
SFV10D681KT	Q	420	560	612	748	1120	25	4.5	98	150	●	●	●	●

●: Approved ○: Unauthorized ● RoHS & REACH Compliant

All Rights Reserved by Xiamen SET Electronics Co., Ltd. 2024-2026 V1.1

Performance Curve (For reference only)

- Max. Peak Current Derating Curves

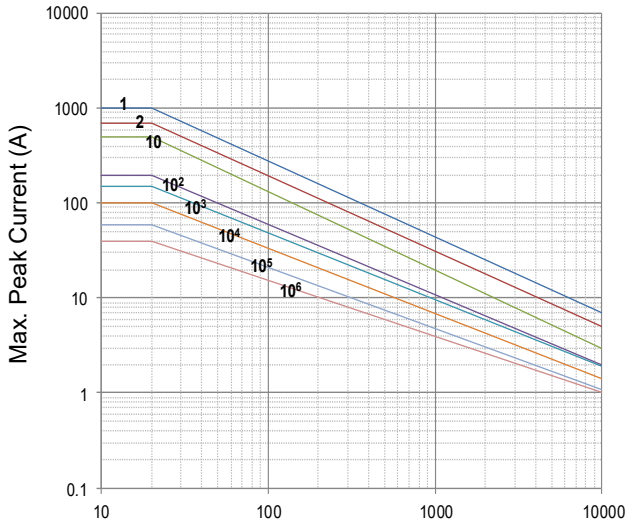

Impulse Duration (μs)

SFV10D220KT to SFV10D680KT

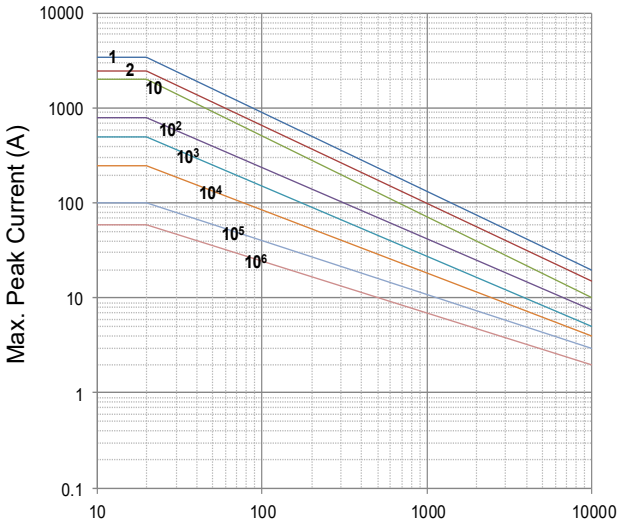

Impulse Duration (μs)

SFV10D820KT to SFV10D122KT

Note: 1, 2, 10, 10^2, 10^3, 10^4, 10^5, 10^6 Stand for Repetitions.

- Voltage-Current Characteristic Curves

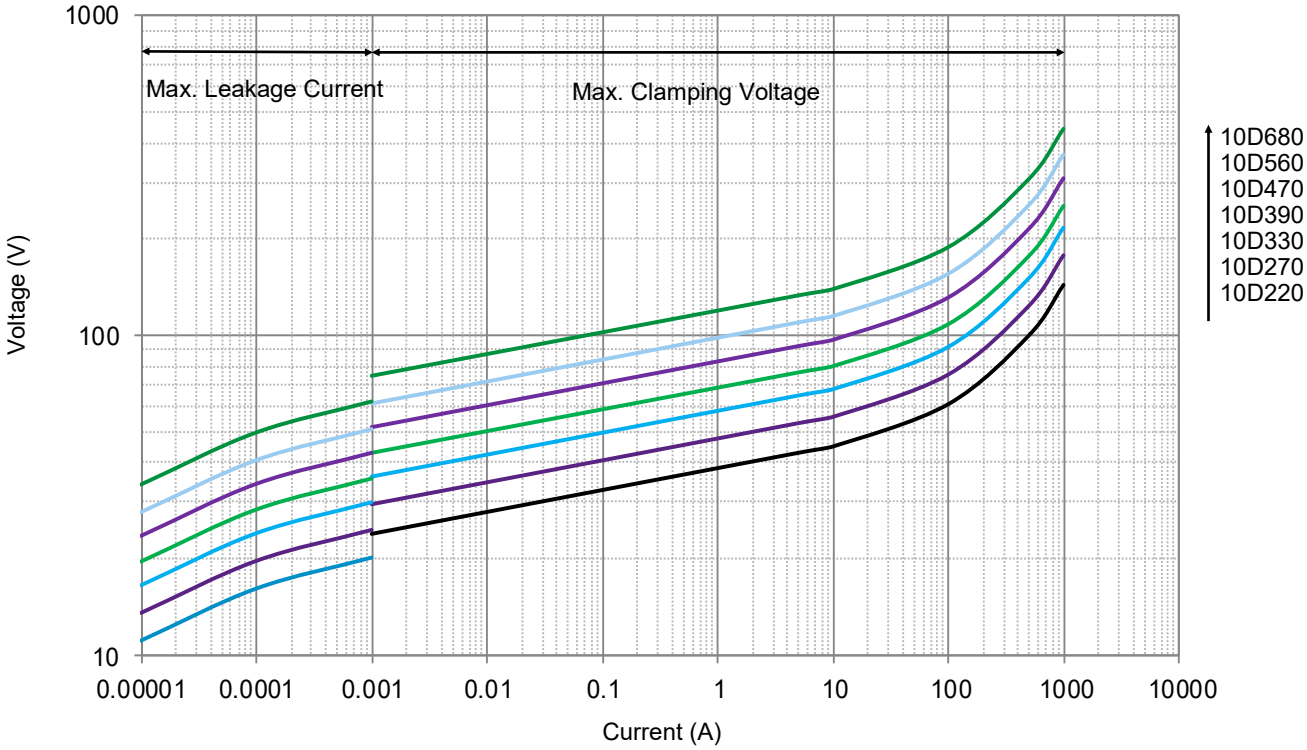

All Rights Reserved by Xiamen SET Electronics Co., Ltd. 2024-2026 V1.1

- Voltage-Current Characteristic Curves

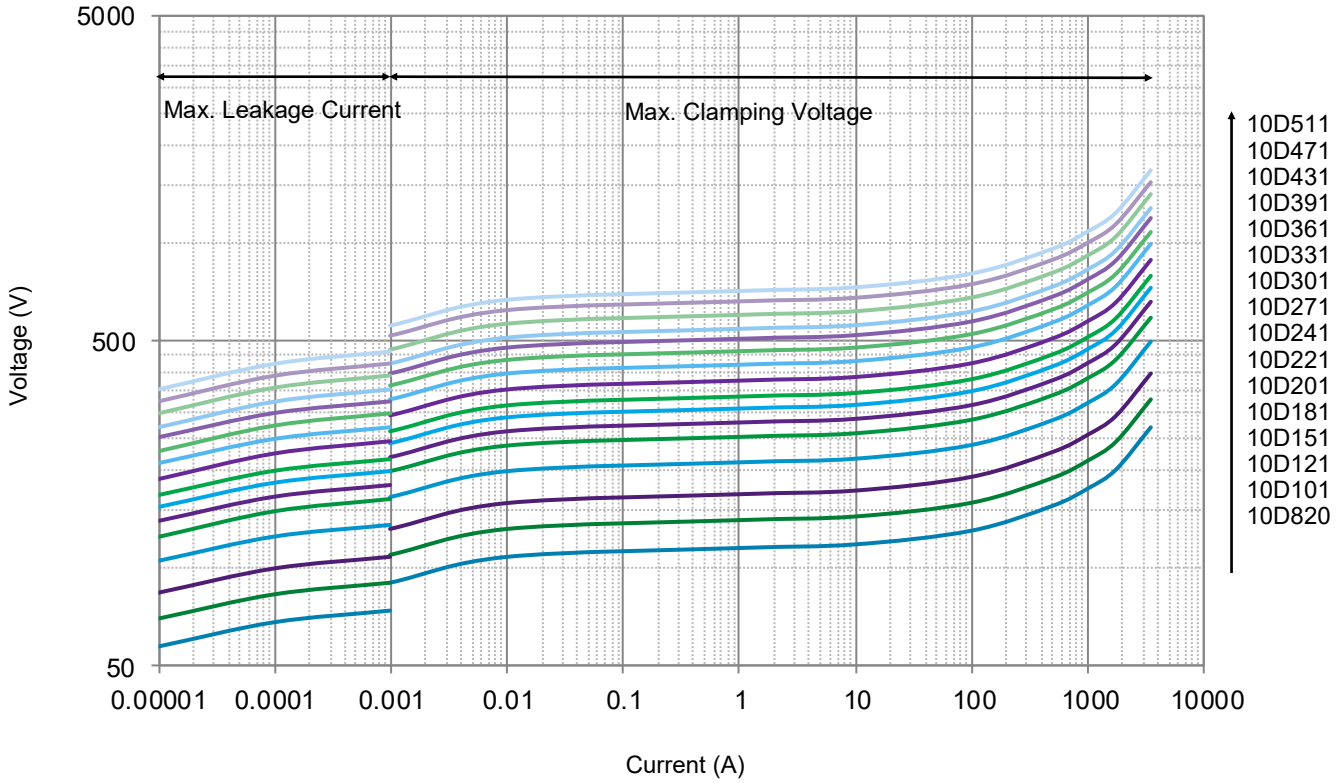

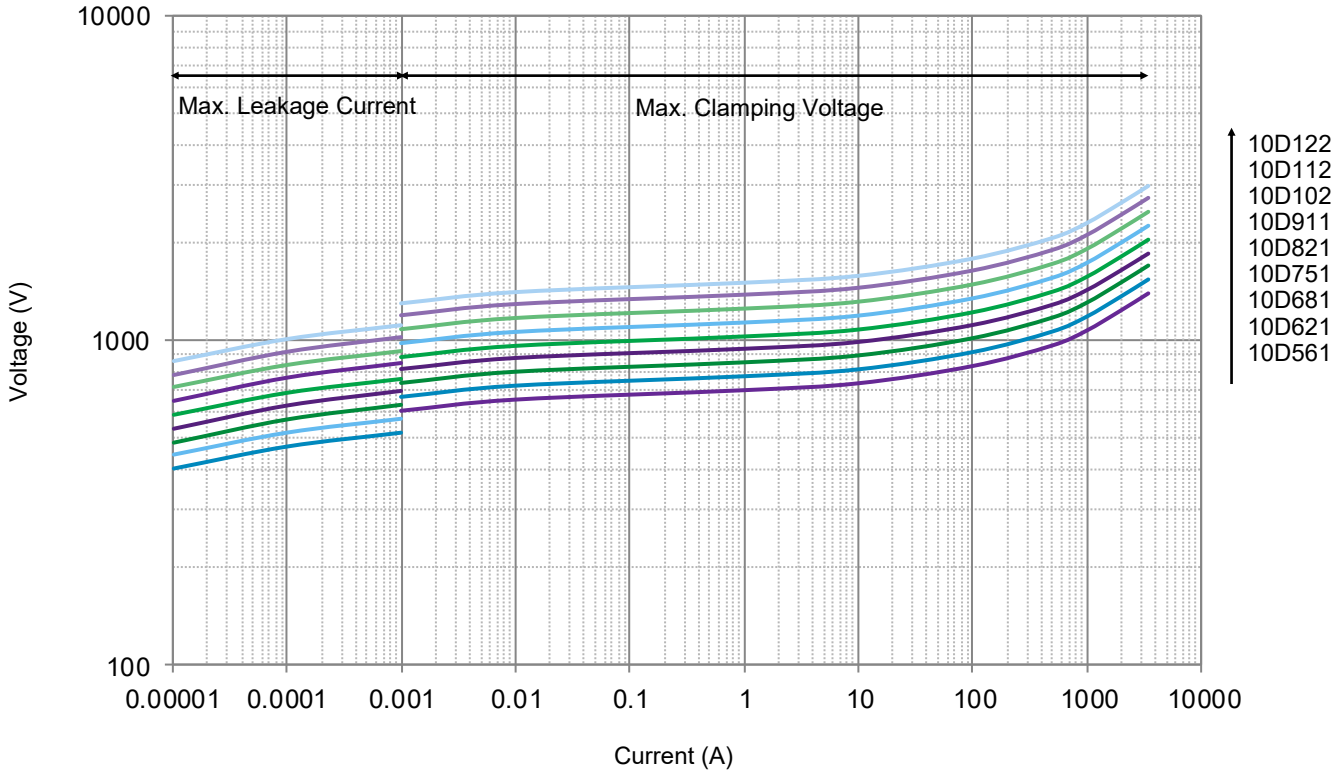

All Rights Reserved by Xiamen SET Electronics Co., Ltd. 2024-2026 V1.1

Packaging Information

- Bulk Packaging (Code: BUL)
- Bulk Packaging Quantity & Weight.

Series	Nominal Varistor Voltage	PE Bag	Box	Carton	G. W / Carton (365 × 265 × 245)
SFV10D T Series	(V)	(PCS)	(PCS)	(PCS)	(kg)±10%
	220 ~ 821	250	500	3000	2 ~ 8
	911 ~ 122				8 ~ 11

Note:
Other lead length packaging information, please contact SETsafe | SETfuse.

All Dimensions in mm

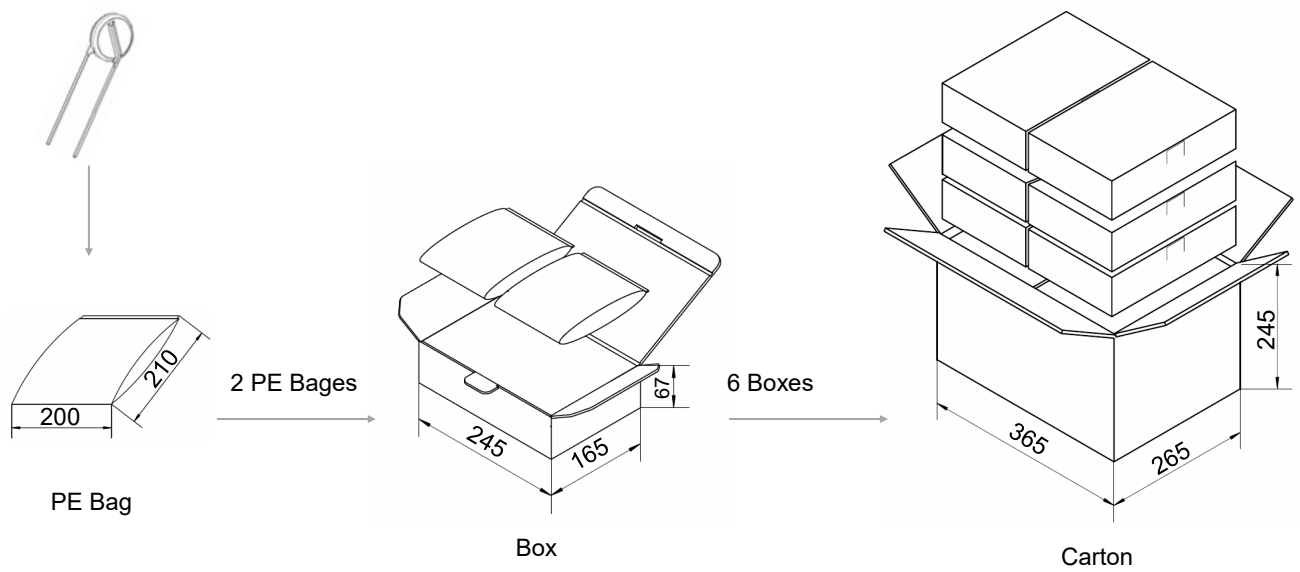

All Rights Reserved by Xiamen SET Electronics Co., Ltd. 2024-2026 V1.1

Packaging Information

- Tape Packaging (Code: 0AB)

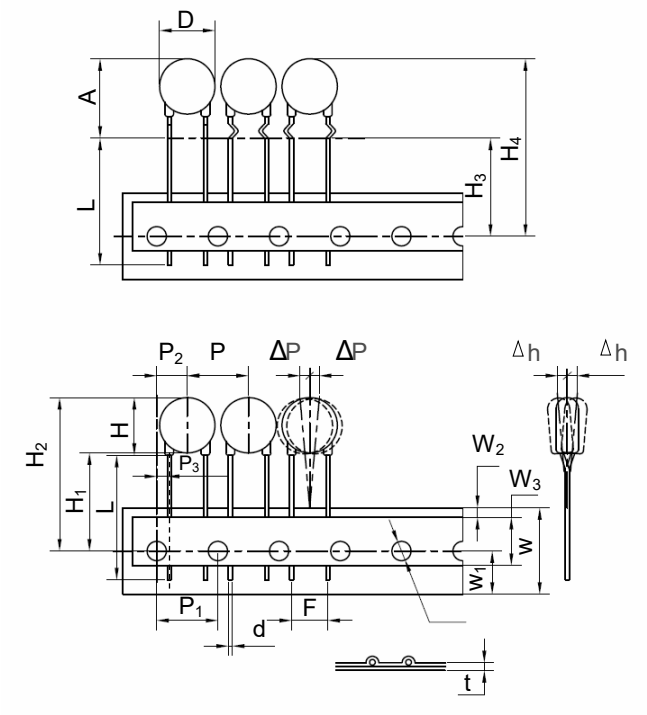

Dimensions (mm)	
P	12.7±1.0
P_1	12.7±0.3
P_2	6.35±1.3
P_3	2.6±0.7
ΔP(max.)	1.0
W	18.0±1.0
W_1	9.0±1.0
W_2(max.)	3.0
W_3	10.0±2.0
H(max.)	15.5
H_1	18.0
H_2(max.)	$36.0^{+2.0}_{-0}$
H_3	18.0
H_4(max.)	$38.0^{+2.0}_{-0}$
Δh(max.)	2.0
t (max.)	0.6
D(max.)	12.5
D_0	4.0±0.2
d	0.80±0.05
A(max.)	17.5
F	7.5±1.0
L(min.)	/

- Tape Packaging Quantity & Weight.

Series	Nominal Varistor Voltage	Box	Carton	G. W / Carton (365 × 265 × 415)
10D	(V)	(PCS)	(PCS)	(kg)±10%
	122	500	3500	12
	911 ~ 112	600	4200	12 ~ 14
	751 ~ 821	700	4900	12 ~ 13
	621 ~ 681	800	5600	12 ~ 13
	511 ~ 561	900	6300	12 ~ 13
	431 ~ 471	1000	7000	12 ~ 13
	361 ~ 391	1100	7700	11 ~ 12
	680			12
	301 ~ 331	1200	8400	9 ~ 12
	560			11
	241 ~ 271	1300	9100	11 ~ 12
	151			12
	470			11
	201 ~ 221	1400	9800	11 ~ 12
	101 ~ 121			10 ~ 11
	390			11
	820	1500	10500	10
	220 ~ 330			9 ~ 11

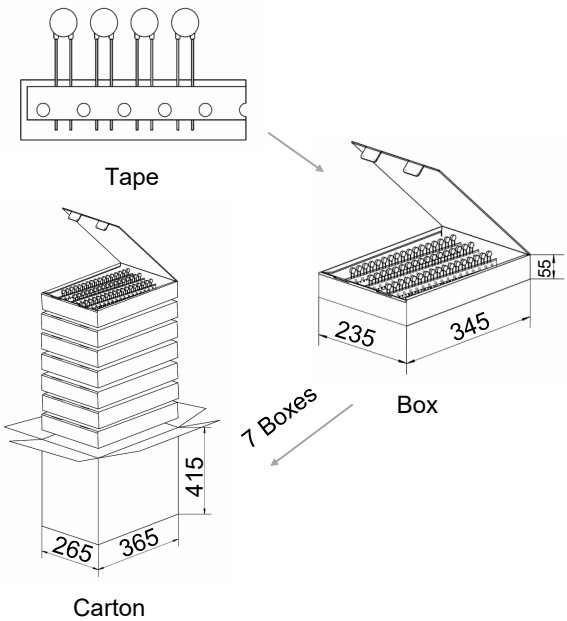

All Rights Reserved by Xiamen SET Electronics Co., Ltd. 2024-2026 V1.1

Packaging Information

- Tape Packaging (Code: 1AB)

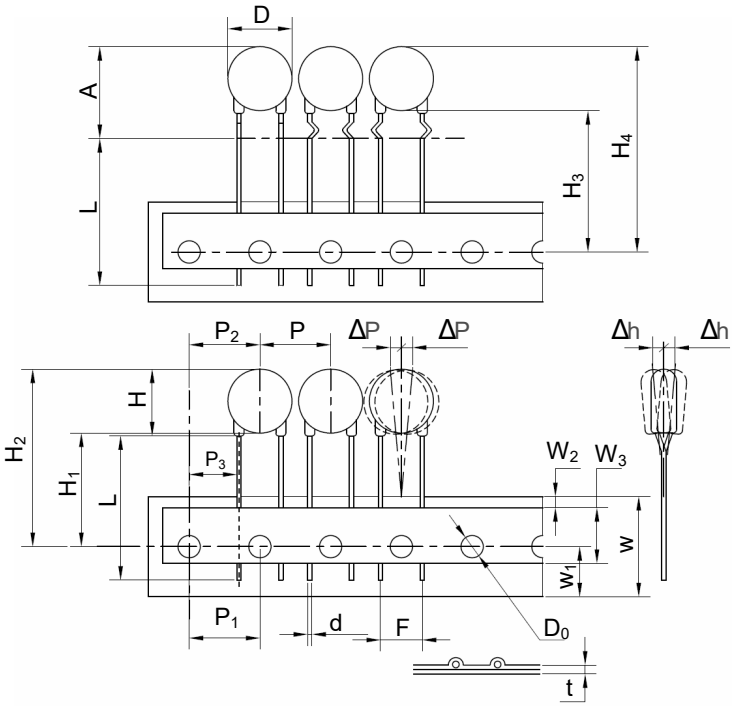

Dimensions (mm)	
P	12.7±1.0
P_1	12.7±0.3
P_2	12.7±1.3
P_3	8.95±0.7
ΔP(max.)	1.0
W	18.0±1.0
W_1	9.0±1.0
W_2(max.)	3.0
W_3	10.0±2.0
H(max.)	15.5
H_1	18.0
H_2(max.)	$36.0^{+2.0}_{-0}$
H_3	18.0
H_4(max.)	$38.0^{+2.0}_{-0}$
Δh(max.)	2.0
t (max.)	0.6
D(max.)	12.5
D_0	4.0±0.2
d	0.80±0.05
A(max.)	17.5
F	7.5±1.0
L(min.)	/

- Tape Packaging Quantity & Weight.

Series	Nominal Varistor Voltage	Box	Carton	G. W / Carton (365 × 265 × 415)
10D	(V)	(PCS)	(PCS)	(kg)±10%
	122	500	3500	12
	911 ~ 112	600	4200	12 ~ 14
	751 ~ 821	700	4900	12 ~ 13
	621 ~ 681	800	5600	12 ~ 13
	511 ~ 561	900	6300	12 ~ 13
	431 ~ 471	1000	7000	12 ~ 13
	361 ~ 391	1100	7700	11 ~ 12
	680			12
	301 ~331	1200	8400	9 ~ 12
	560			11
	241 ~ 271	1300	9100	11 ~ 12
	151			12
	470			11
	201 ~ 221	1400	9800	11 ~ 12
	101 ~ 121			10 ~ 11
	390			11
	820	1500	10500	10
	220 ~ 330			9 ~ 11

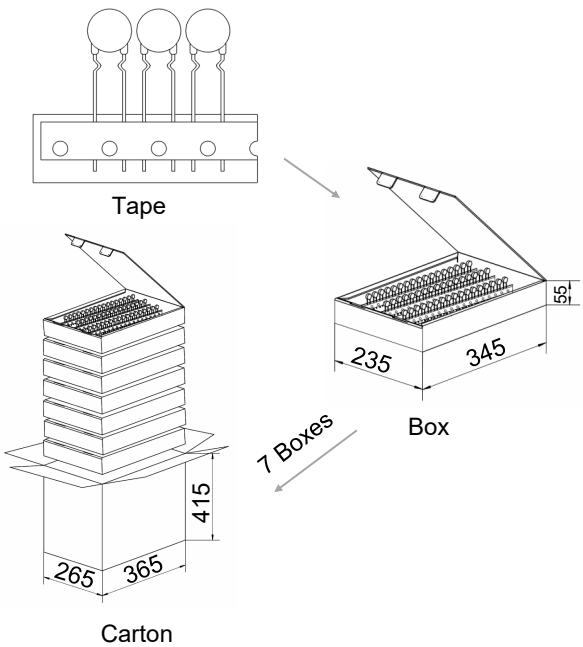

All Rights Reserved by Xiamen SET Electronics Co., Ltd. 2024-2026 V1.1

Packaging Information

- Tape Packaging (Code: 0EB)

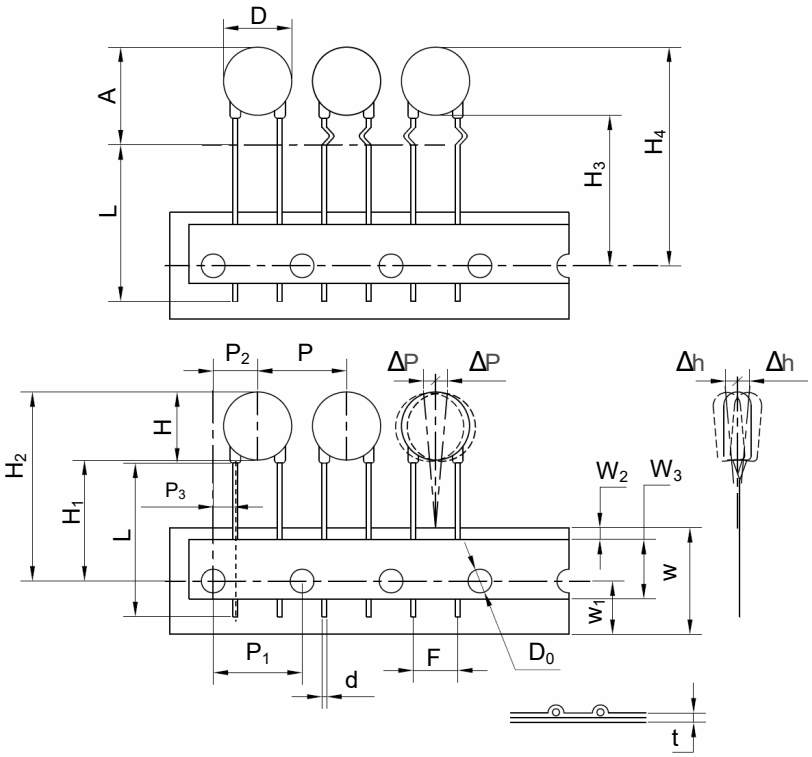

Dimensions (mm)	
P	15.0±1.0
P_1	15.0±0.3
P_2	7.5±1.3
P_3	3.75±0.7
ΔP(max.)	1.0
W	18.0±1.0
W_1	9.0±1.0
W_2(max.)	3.0
W_3	10.0±2.0
H(max.)	15.5
H_1	18.0
H_2(max.)	$36.0^{+2.0}_{-0}$
H_3	18.0
H_4(max.)	$38.0^{+2.0}_{-0}$
Δh(max.)	2.0
t (max.)	0.6
D(max.)	12.5
D_0	4.0±0.2
d	0.80±0.05
A(max.)	17.5
F	7.5±1.0
L(min.)	/

- Tape Packaging Quantity & Weight.

Series	Nominal Varistor Voltage	Box	Carton	G. W / Carton (365 × 265 × 415)
	(V)	(PCS)	(PCS)	(kg)±10%
10D	911 ~ 122	500	3500	10 ~ 13
	751 ~ 821	600	4200	11 ~ 12
	621 ~ 681	700	4900	11 ~ 12
	511 ~ 561	800	5600	11 ~ 12
	271 ~ 471	1000	7000	9 ~ 12
	151			9
	560 ~ 680			9 ~ 10
	201 ~ 241	1100	7700	8 ~ 9
	121			
	390 ~ 470			
	181	1200	8400	8 ~ 9
	820 ~ 101			
	330			
	220 ~ 270	1300	9100	8 ~ 9

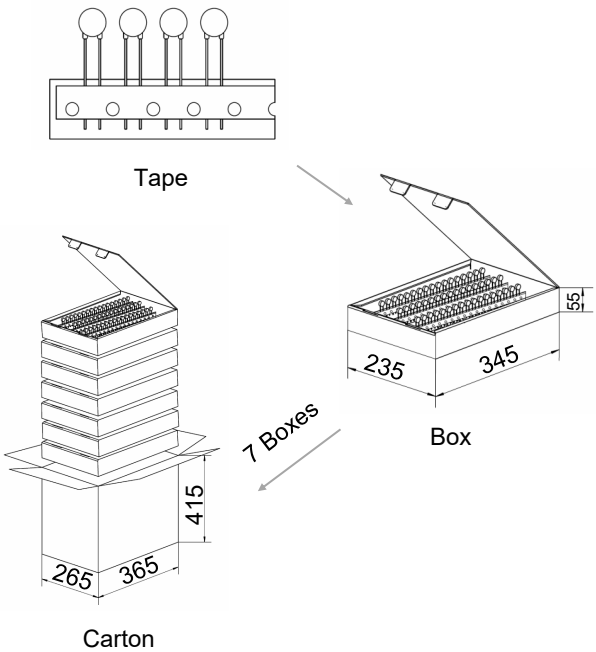

All Rights Reserved by Xiamen SET Electronics Co., Ltd. 2024-2026 V1.1

Packaging Information

- Reel Packaging (Code:0AR)

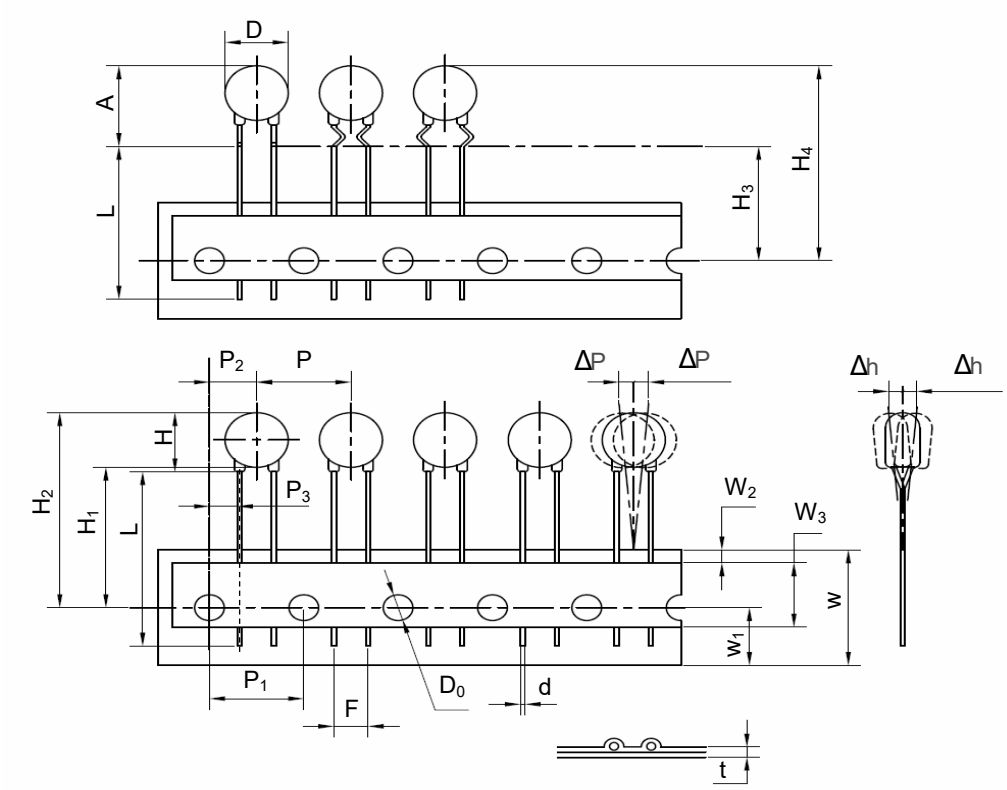

Dimensions (mm)	
P	12.7±1.0
P_1	12.7±0.3
P_2	6.35±1.30
P_3	2.6±0.7
ΔP(max.)	1.0
W	18.0±1.0
W_1	9.0±1.0
W_2(max.)	3.0
W_3	10.0±2.0
H(max.)	12.0
H_1	18.0
H_2(max.)	$36.0^{+2.0}_{-0}$
H_3	18.0
H_4(max.)	$38.0^{+2.0}_{-0}$
Δh(max.)	2.0
t (max.)	0.6
D(max.)	9.0
D_0	4.0±0.2
d	0.80±0.05
A(max.)	17.5
F	7.5±1.0
L(min.)	/

- Reel Packaging Quantity & Weight.

Series	Nominal Varistor Voltage	Box	Carton	G. W / Carton (375 × 335 × 385)
10D	(V)	(PCS)	(PCS)	(kg)±10%
	220 ~ 391	1500	7500	7 ~ 12
	431 ~ 561	1000	5000	8 ~ 10
	621 ~ 821	800	4000	8 ~ 11
	911 ~ 122	500	2500	7 ~ 10

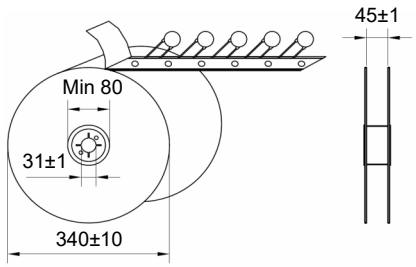

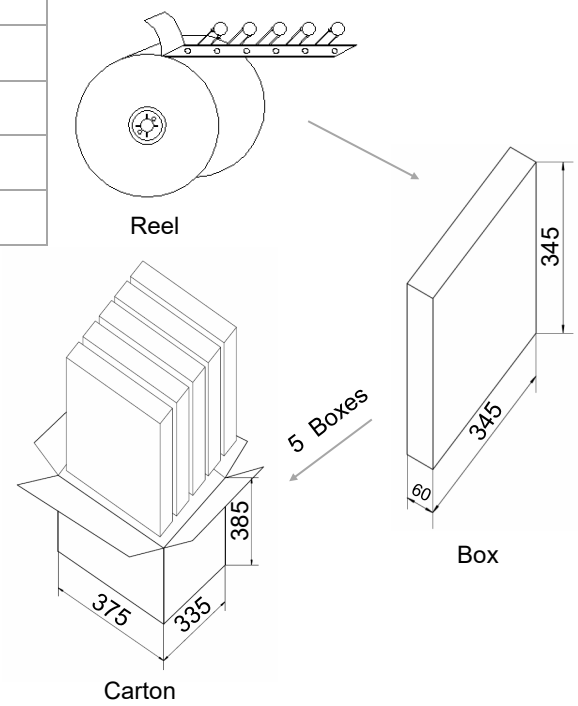

All Rights Reserved by Xiamen SET Electronics Co., Ltd. 2024-2026 V1.1

Dimensions (mm)

Model	L (Min.)	H (Max.)	T (Max.)	D (Max.)	d	F	F_1	A (Max.)
SFV14D220KT	7	18.5	4.9	16.5	0.80±0.05	7.5±0.5	1.1 ~ 2.5	21.5
SFV14D270KT	7	18.5	5.2	16.5	0.80±0.05	7.5±0.5	1.2 ~ 2.7	21.5
SFV14D330KT	7	18.5	5.5	16.5	0.80±0.05	7.5±0.5	1.3 ~ 2.9	21.5
SFV14D390KT	7	18.5	5.8	16.5	0.80±0.05	7.5±0.5	1.4 ~ 3.1	21.5
SFV14D470KT	7	18.5	5.0	16.5	0.80±0.05	7.5±0.5	1.2 ~ 2.7	21.5
SFV14D560KT	7	18.5	5.2	16.5	0.80±0.05	7.5±0.5	1.3 ~ 2.9	21.5
SFV14D680KT	7	18.5	5.5	16.5	0.80±0.05	7.5±0.5	1.5 ~ 3.2	21.5
SFV14D820KT	7	18.5	4.8	16.5	0.80±0.05	7.5±0.5	1.2 ~ 2.6	21.5
SFV14D101KT	7	18.5	5.0	16.5	0.80±0.05	7.5±0.5	1.3 ~ 2.8	21.5
SFV14D121KT	7	18.5	5.2	16.5	0.80±0.05	7.5±0.5	1.4 ~ 3.0	21.5
SFV14D151KT	7	18.5	5.5	16.5	0.80±0.05	7.5±0.5	1.6 ~ 3.3	21.5
SFV14D181KT	7	18.5	4.9	16.5	0.80±0.05	7.5±0.5	1.0 ~ 2.6	21.5
SFV14D201KT	7	18.5	5.0	16.5	0.80±0.05	7.5±0.5	1.1 ~ 2.7	21.5
SFV14D221KT	7	18.5	5.1	16.5	0.80±0.05	7.5±0.5	1.2 ~ 2.8	21.5
SFV14D241KT	7	18.5	5.3	16.5	0.80±0.05	7.5±0.5	1.3 ~ 2.9	21.5
SFV14D271KT	7	18.5	5.4	16.5	0.80±0.05	7.5±0.5	1.4 ~ 3.1	21.5
SFV14D301KT	7	18.5	5.6	16.5	0.80±0.05	7.5±0.5	1.5 ~ 3.2	21.5
SFV14D331KT	7	18.5	5.8	16.5	0.80±0.05	7.5±0.5	1.6 ~ 3.3	21.5
SFV14D361KT	7	18.5	6.0	16.5	0.80±0.05	7.5±0.5	1.7 ~ 3.5	21.5
SFV14D391KT	7	18.5	6.1	16.5	0.80±0.05	7.5±0.5	1.8 ~ 3.6	21.5
SFV14D431KT	7	18.5	6.4	16.5	0.80±0.05	7.5±0.5	1.8 ~ 3.8	21.5
SFV14D471KT	7	18.5	6.6	16.5	0.80±0.05	7.5±0.5	2.0 ~ 4.0	21.5
SFV14D511KT	7	18.5	6.8	16.5	0.80±0.05	7.5±0.5	2.2 ~ 4.2	21.5
SFV14D561KT	7	18.5	7.1	16.5	0.80±0.05	7.5±0.5	2.4 ~ 4.4	21.5
SFV14D621KT	7	18.5	7.5	16.5	0.80±0.05	7.5±0.5	2.7 ~ 4.7	21.5
SFV14D681KT	7	18.5	7.8	16.5	0.80±0.05	7.5±0.5	3.0 ~ 5.0	21.5
SFV14D751KT	7	18.5	8.3	16.5	0.80±0.05	7.5±0.5	3.3 ~ 5.3	21.5
SFV14D821KT	7	18.5	8.7	16.5	0.80±0.05	7.5±0.5	3.6 ~ 5.6	21.5
SFV14D911KT	7	18.5	9.2	16.5	0.80±0.05	7.5±0.5	4.0 ~ 6.0	21.5
SFV14D102KT	7	18.5	9.7	16.5	0.80±0.05	7.5±0.5	4.5 ~ 6.5	21.5
SFV14D112KT	7	18.5	10.3	16.5	0.80±0.05	7.5±0.5	4.9 ~ 6.9	21.5
SFV14D122KT	7	18.5	10.9	16.5	0.80±0.05	7.5±0.5	5.4 ~ 7.4	21.5

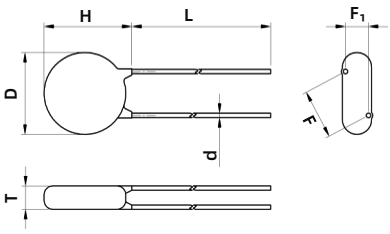

Straight Lead (A)

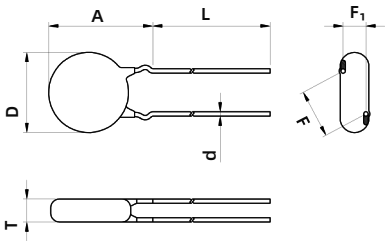

Outward Crimp (C)

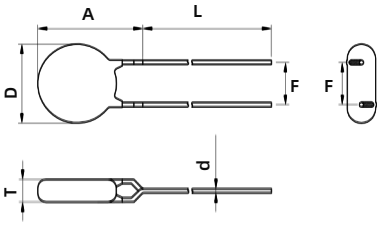

Inline Crimp (D)

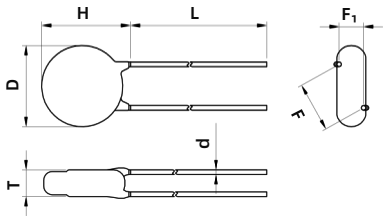

Little Straight Lead (I)

Note:
The above data is for reference only.

All Rights Reserved by Xiamen SET Electronics Co., Ltd. 2024-2026 V1.1

Specification

Model	Surge Level	Max. Continuous Operating Voltage		Varistor Voltage @1 mA DC		Clamping Voltage (Max.)		Max. Peak Current (1 time, 8/20 μs)	Max. Energy (10/1000 μs)	Typical Capacitance (For reference only) @1 kHz	Agency Information			
		VAC	VDC	Min.	Max.	V_C	I_P	S		(pF)				
		(V)	(V)	(V)	(V)	(V)	(A)	(kA)	(J)		UL	cUL	TUV	CQC
SFV14D220KT	S	14	18	20	24	43	10	1	5.0	9100	○	○	●	●
SFV14D270KT	S	17	22	24	31	53	10	1	6.0	7400	○	○	●	●
SFV14D330KT	S	20	26	30	36	65	10	1	7.5	6100	○	○	●	●
SFV14D390KT	S	25	31	35	43	77	10	1	8.6	5100	○	○	●	●
SFV14D470KT	S	30	38	42	52	93	10	1	10	4300	○	○	●	●
SFV14D560KT	S	35	45	50	62	110	10	1	11	3600	○	○	●	●
SFV14D680KT	S	40	56	61	75	135	10	1	14	2900	○	○	●	●
SFV14D820KT	S	50	65	74	90	135	50	4.5	22	2400	●	●	●	●
SFV14D101KT	S	60	85	90	110	165	50	4.5	28	2000	●	●	●	●
SFV14D121KT	S	75	100	108	132	200	50	4.5	32	1700	●	●	●	●
SFV14D151KT	S	95	125	135	165	250	50	4.5	40	1300	●	●	●	●
SFV14D181KT	S	115	150	162	198	300	50	4.5	50	1100	●	●	●	●
SFV14D201KT	S	130	170	180	220	340	50	4.5	57	1000	●	●	●	●
SFV14D221KT	S	140	180	198	242	360	50	4.5	60	900	●	●	●	●
SFV14D241KT	S	150	200	216	264	395	50	4.5	63	830	●	●	●	●
SFV14D271KT	S	175	225	243	297	455	50	4.5	70	740	●	●	●	●
SFV14D301KT	S	190	250	270	330	500	50	4.5	77	670	●	●	●	●
SFV14D331KT	S	210	275	297	363	550	50	4.5	85	610	●	●	●	●
SFV14D361KT	S	230	300	324	396	595	50	4.5	93	560	●	●	●	●
SFV14D391KT	S	250	320	351	429	650	50	4.5	100	510	●	●	●	●
SFV14D431KT	S	275	350	387	473	710	50	4.5	115	460	●	●	●	●
SFV14D471KT	S	300	385	423	517	775	50	4.5	125	430	●	●	●	●
SFV14D511KT	S	320	415	459	561	845	50	4.5	125	390	●	●	●	●
SFV14D561KT	S	350	460	504	616	925	50	4.5	125	360	●	●	●	●
SFV14D621KT	S	385	505	558	682	1025	50	4.5	125	320	●	●	●	●
SFV14D681KT	S	420	560	612	748	1120	50	4.5	130	290	●	●	●	●
SFV14D751KT	S	460	615	675	825	1240	50	4.5	143	270	●	●	●	●
SFV14D821KT	S	510	670	738	902	1355	50	4.5	157	240	●	●	●	●
SFV14D911KT	S	550	745	819	1001	1500	50	4.5	175	220	●	●	●	●
SFV14D102KT	S	625	825	900	1100	1650	50	4.5	190	200	●	●	●	●
SFV14D112KT	S	680	895	990	1210	1815	50	4.5	213	180	●	●	●	●
SFV14D122KT	S	750	990	1080	1320	1980	50	4.5	213	150	●	●	●	●

●: Approved ○: Unauthorized ● RoHS & REACH Compliant

All Rights Reserved by Xiamen SET Electronics Co., Ltd. 2024-2026 V1.1

Specification

Model	Surge Level	Max. Continuous Operating Voltage		Varistor Voltage @1 mA DC		Clamping Voltage (Max.)		Max. Peak Current (1 time, 8/20 μs)	Max. Energy (10/1000 μs)	Typical Capacitance (For reference only) @1 kHz	Agency Information			
		VAC	VDC	Min.	Max.	V_C	I_P	K		(pF)				
		(V)	(V)	(V)	(V)	(V)	(A)	(kA)	(J)		UL	cUL	TUV	CQC
SFV14D220KT	K	14	18	20	24	43	10	2	6.3	9100	○	○	●	●
SFV14D270KT	K	17	22	24	31	53	10	2	7.8	7400	○	○	●	●
SFV14D330KT	K	20	26	30	36	65	10	2	9.5	6100	○	○	●	●
SFV14D390KT	K	25	31	35	43	77	10	2	11	5100	○	○	●	●
SFV14D470KT	K	30	38	42	52	93	10	2	14	4300	○	○	●	●
SFV14D560KT	K	35	45	50	62	110	10	2	16	3600	○	○	●	●
SFV14D680KT	K	40	56	61	75	135	10	2	20	2900	○	○	●	●
SFV14D820KT	K	50	65	74	90	135	50	6	28	2400	●	●	●	●
SFV14D101KT	K	60	85	90	110	165	50	6	35	2000	●	●	●	●
SFV14D121KT	K	75	100	108	132	200	50	6	42	1700	●	●	●	●
SFV14D151KT	K	95	125	135	165	250	50	6	53	1300	●	●	●	●
SFV14D181KT	K	115	150	162	198	300	50	6	60	1100	●	●	●	●
SFV14D201KT	K	130	170	180	220	340	50	6	70	1000	●	●	●	●
SFV14D221KT	K	140	180	198	242	360	50	6	78	900	●	●	●	●
SFV14D241KT	K	150	200	216	264	395	50	6	84	830	●	●	●	●
SFV14D271KT	K	175	225	243	297	455	50	6	99	740	●	●	●	●
SFV14D301KT	K	190	250	270	330	500	50	6	108	670	●	●	●	●
SFV14D331KT	K	210	275	297	363	550	50	6	115	610	●	●	●	●
SFV14D361KT	K	230	300	324	396	595	50	6	130	560	●	●	●	●
SFV14D391KT	K	250	320	351	429	650	50	6	140	510	●	●	●	●
SFV14D431KT	K	275	350	387	473	710	50	6	155	460	●	●	●	●
SFV14D471KT	K	300	385	423	517	775	50	6	175	430	●	●	●	●
SFV14D511KT	K	320	415	459	561	845	50	6	180	390	●	●	●	●
SFV14D561KT	K	350	460	504	616	925	50	6	185	360	●	●	●	●
SFV14D621KT	K	385	505	558	682	1025	50	6	190	320	●	●	●	●
SFV14D681KT	K	420	560	612	748	1120	50	6	200	290	●	●	●	●
SFV14D751KT	K	460	615	675	825	1240	50	6	210	270	●	●	●	●
SFV14D821KT	K	510	670	738	902	1355	50	6	235	240	●	●	●	●
SFV14D911KT	K	550	745	819	1001	1500	50	6	255	220	●	●	●	●
SFV14D102KT	K	625	825	900	1100	1650	50	6	270	200	●	●	●	●
SFV14D112KT	K	680	895	990	1210	1815	50	6	280	180	●	●	●	●
SFV14D122KT	K	750	990	1080	1320	1980	50	6	310	150	●	●	●	●

●: Approved ○: Unauthorized ● RoHS & REACH Compliant

All Rights Reserved by Xiamen SET Electronics Co., Ltd. 2024-2026 V1.1

Specification

Model	Surge Level	Max. Continuous Operating Voltage		Varistor Voltage @1 mA DC		Clamping Voltage (Max.)		Max. Peak Current (1 time, 8/20 μs)	Max. Energy (8/20 μs)	Typical Capacitance (For reference only) @1 kHz	Agency Information			
		VAC	VDC	Min.	Max.	V_C	I_P	H		(pF)				
		(V)	(V)	(V)	(V)	(V)	(A)	(kA)	(J)		UL	cUL	TUV	CQC
SFV14D201KT	H	130	170	180	220	340	50	8	150	1000	●	●	●	●
SFV14D221KT	H	140	180	198	242	360	50	8	160	900	●	●	●	●
SFV14D241KT	H	150	200	216	264	395	50	8	180	830	●	●	●	●
SFV14D271KT	H	175	225	243	297	455	50	8	200	740	●	●	●	●
SFV14D301KT	H	190	250	270	330	500	50	8	220	670	●	●	●	●
SFV14D331KT	H	210	275	297	363	550	50	8	245	610	●	●	●	●
SFV14D361KT	H	230	300	324	396	595	50	8	260	560	●	●	●	●
SFV14D391KT	H	250	320	351	429	650	50	8	290	510	●	●	●	●
SFV14D431KT	H	275	350	387	473	710	50	8	320	460	●	●	●	●
SFV14D471KT	H	300	385	423	517	775	50	8	350	430	●	●	●	●
SFV14D511KT	H	320	415	459	561	845	50	8	380	390	●	●	●	●
SFV14D561KT	H	350	460	504	616	925	50	8	400	360	●	●	●	●
SFV14D621KT	H	385	505	558	682	1025	50	8	400	320	●	●	●	●
SFV14D681KT	H	420	560	612	748	1120	50	8	400	290	●	●	●	●

●: Approved ○: Unauthorized ● RoHS & REACH Compliant

All Rights Reserved by Xiamen SET Electronics Co., Ltd. 2024-2026 V1.1

Specification

Model	Surge Level	Max. Continuous Operating Voltage		Varistor Voltage @1 mA DC		Clamping Voltage (Max.)		Pulse Impact Performance (40 times) (1.2/50 μs & 8/20 μs)	Max. Energy (10/1000 μs)	Typical Capacitance (For reference only) @1 kHz	Agency Information			
		VAC	VDC	Min.	Max.	V_C	I_P	Q		(pF)	UL	cUL	TUV	CQC
		(V)	(V)	(V)	(V)	(V)	(A)	(kV)	(J)					
SFV14D201KT	Q	130	170	180	220	340	50	6.6	70	1000	●	●	●	●
SFV14D221KT	Q	140	180	198	242	360	50	6.6	78	900	●	●	●	●
SFV14D241KT	Q	150	200	216	264	395	50	6.6	84	830	●	●	●	●
SFV14D271KT	Q	175	225	243	297	455	50	6.6	99	740	●	●	●	●
SFV14D301KT	Q	190	250	270	330	500	50	6.6	108	670	●	●	●	●
SFV14D331KT	Q	210	275	297	363	550	50	6.6	115	610	●	●	●	●
SFV14D361KT	Q	230	300	324	396	595	50	6.6	130	560	●	●	●	●
SFV14D391KT	Q	250	320	351	429	650	50	6.6	140	510	●	●	●	●
SFV14D431KT	Q	275	350	387	473	710	50	6.6	155	460	●	●	●	●
SFV14D471KT	Q	300	385	423	517	775	50	6.6	175	430	●	●	●	●
SFV14D511KT	Q	320	415	459	561	845	50	6.6	180	390	●	●	●	●
SFV14D561KT	Q	350	460	504	616	925	50	6.6	185	360	●	●	●	●
SFV14D621KT	Q	385	505	558	682	1025	50	6.6	190	320	●	●	●	●
SFV14D681KT	Q	420	560	612	748	1120	50	6.6	200	290	●	●	●	●

●: Approved ○: Unauthorized ● RoHS & REACH Compliant

All Rights Reserved by Xiamen SET Electronics Co., Ltd. 2024-2026 V1.1

Performance Curve (For reference only)

- Max. Peak Current Derating Curves

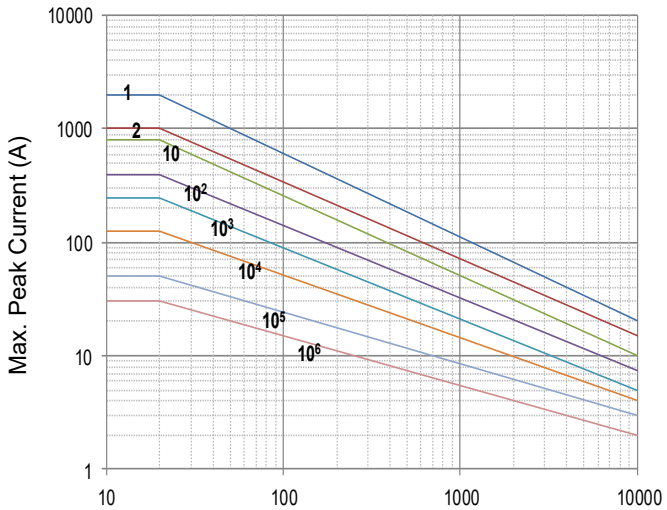

SFV14D220K to SFV14D680K

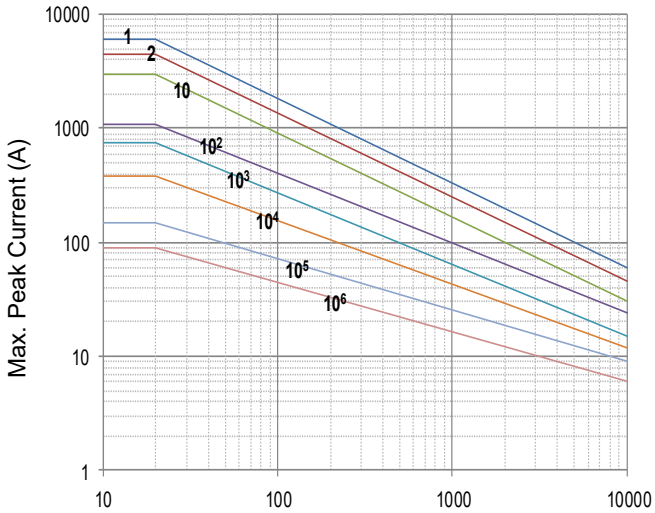

SFV14D820K to SFV14D122K

Note: 1, 2, 10, 10^2, 10^3, 10^4, 10^5, 10^6 Stand for Repetitions.

- Voltage-Current Characteristic Curves

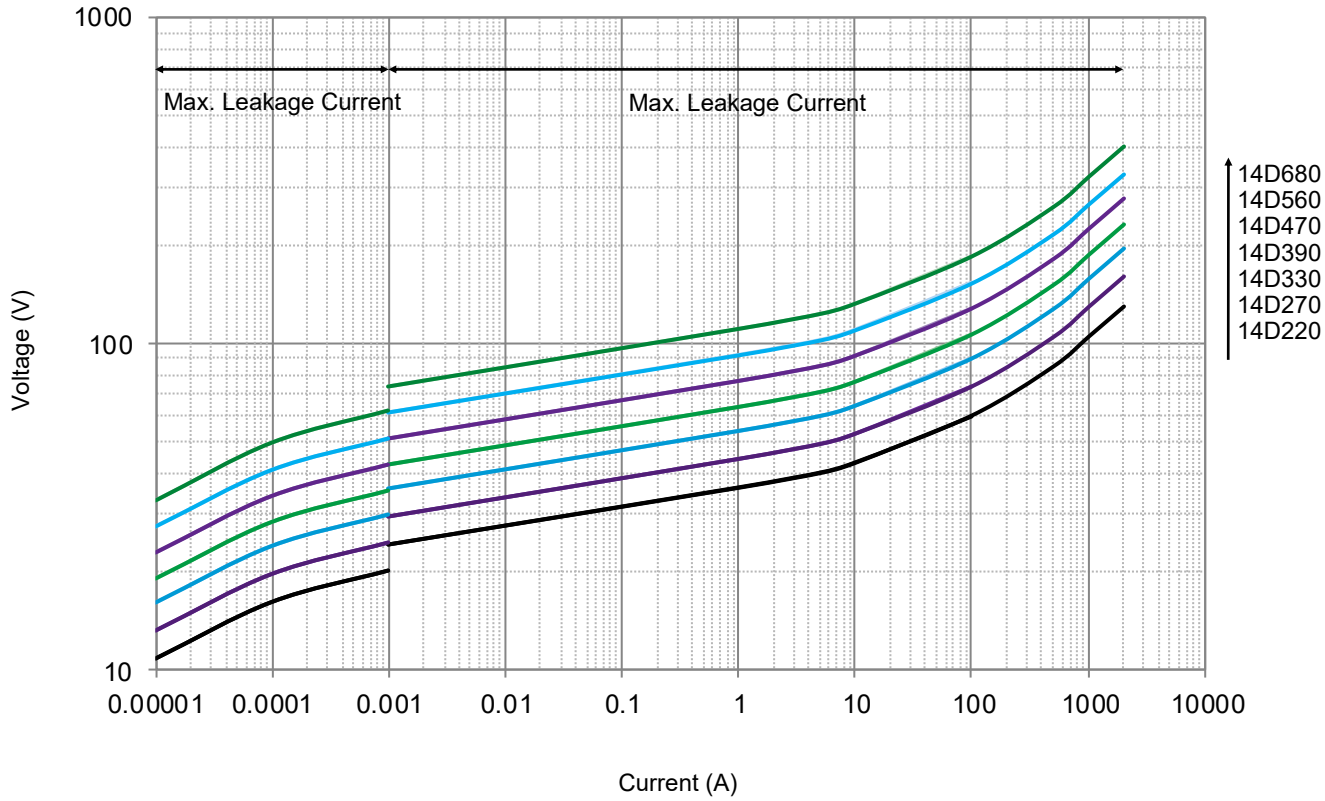

All Rights Reserved by Xiamen SET Electronics Co., Ltd. 2024-2026 V1.1

- Voltage-Current Characteristic Curves

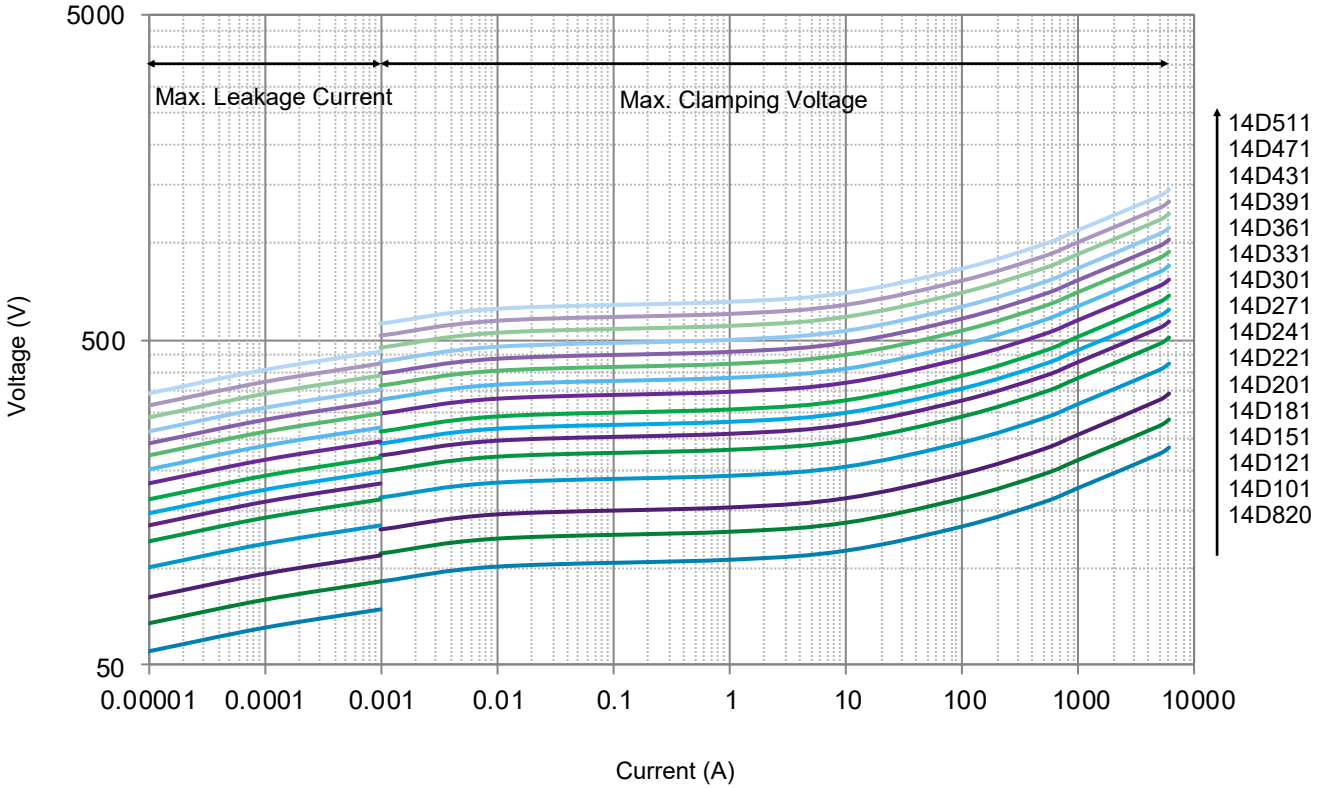

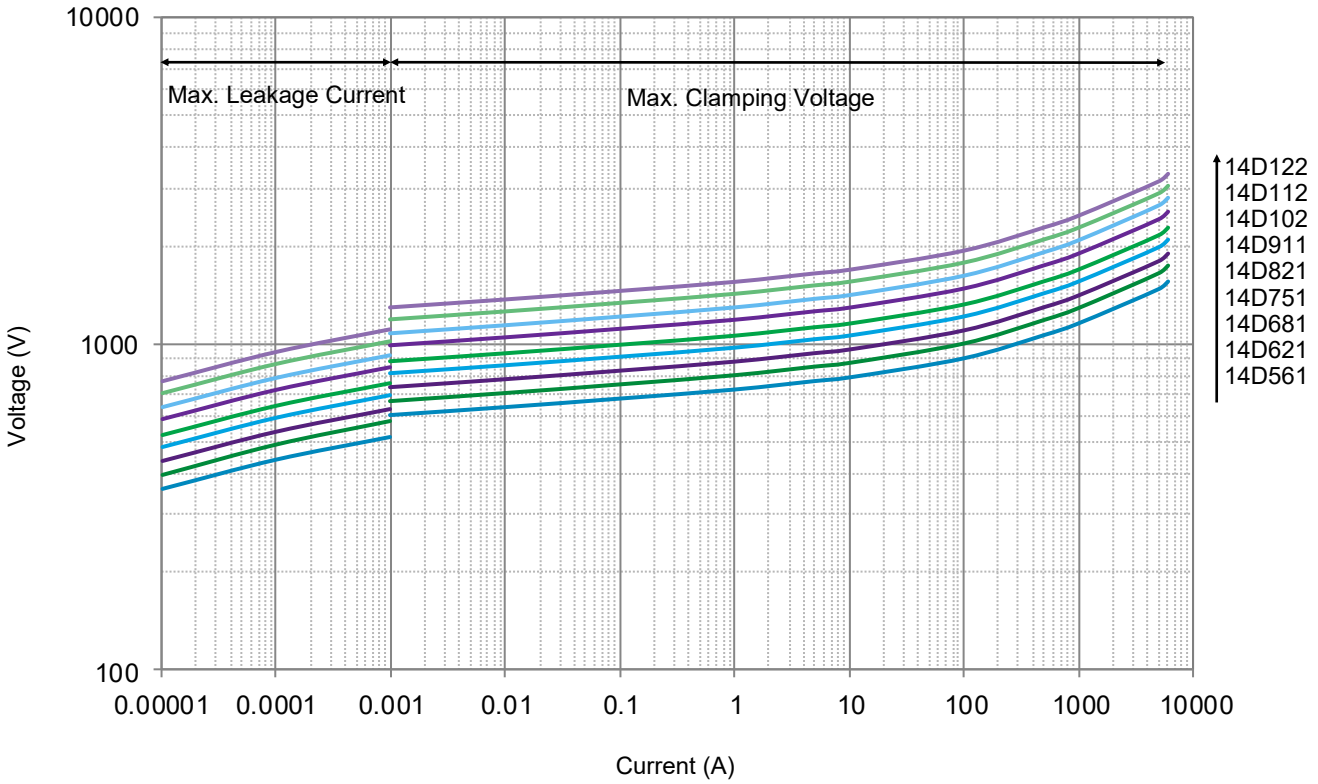

All Rights Reserved by Xiamen SET Electronics Co., Ltd. 2024-2026 V1.1

Packaging Information

- Bulk Packaging (Code: BUL)
- Bulk Packaging Quantity & Weight.

Series	Nominal Varistor Voltage	PE Bag	Box	Carton	G. W / Carton （365 × 265 × 245）
SFV14D T Series	(V)	(PCS)	(PCS)	(PCS)	(kg)±10%
	220 ~ 361	200	400	2400	4 ~ 7
	391 ~ 621	150	300	1800	5 ~ 7
	681 ~122	100	200	1200	5 ~ 8

Note:
Other lead length packaging information, please contact SETsafe | SETfuse.

All Dimensions in mm

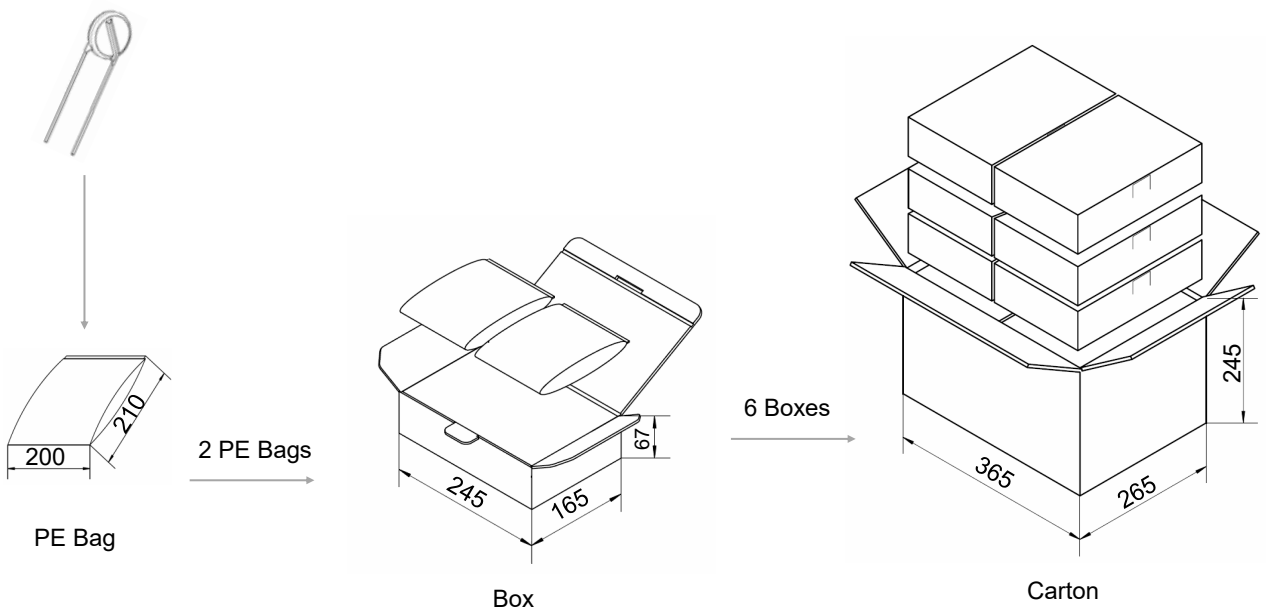

All Rights Reserved by Xiamen SET Electronics Co., Ltd. 2024-2026 V1.1

Packaging Information

- Tape Packaging (Code: 0AB)

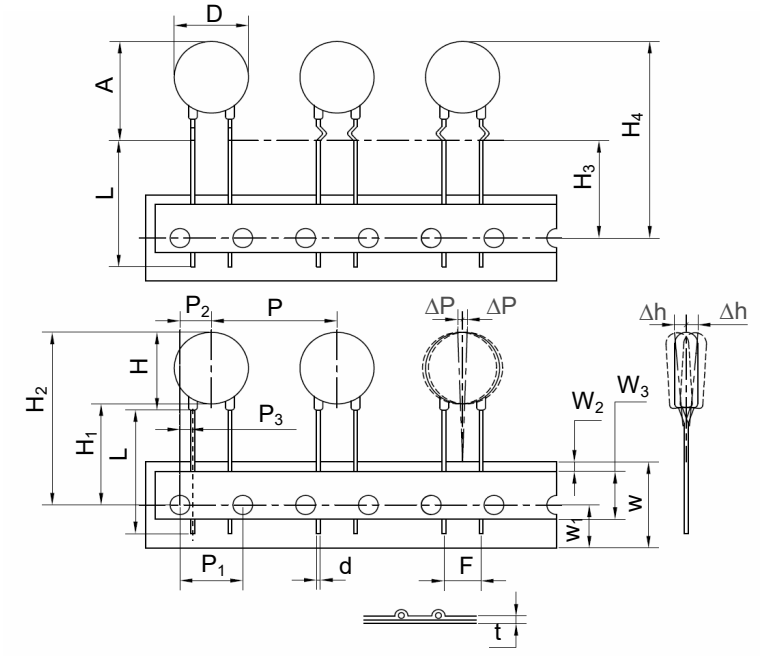

Dimensions (mm)	
P	25.4±1.0
P_1	12.7±0.3
P_2	6.35±1.3
P_3	2.6±0.7
ΔP(max.)	1.0
W	18.0±1.0
W_1	9.0±1.0
W_2(max.)	3.0
W_3	10.0±2.0
H(max.)	18.5
H_1	18.0
H_2(max.)	$40.0^{+2.0}_{-0}$
H_3	18.0
H_4(max.)	$42.0^{+2.0}_{-0}$
Δh(max.)	2.0
t (max.)	0.6
D(max.)	16.5
D_0	4.0±0.2
d	0.80±0.05
A(max.)	21.5
F	7.5±0.5
L(min.)	/

- Tape Packaging Quantity & Weight.

Series	Nominal Varistor Voltage	Box	Carton	G. W / Carton (365 × 265 × 415)
14D	(V)	(PCS)	(PCS)	(kg)±10%
	112 ~ 122	250	1750	11 ~ 12
	681 ~ 102	300	2100	9 ~ 12
	471 ~ 621	400	2800	9 ~ 11
	301 ~ 431	500	3500	8 ~ 11
	680			8
	390 ~ 560	600	4200	8 ~ 10
	820 ~ 271			7 ~ 9
	220 ~ 330	700	4900	7 ~ 9

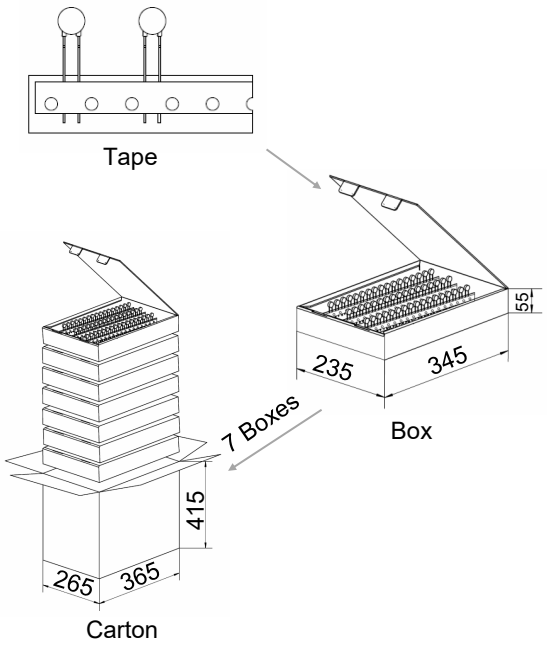

All Rights Reserved by Xiamen SET Electronics Co., Ltd. 2024-2026 V1.1

Packaging Information

- Tape Packaging (Code: 1AB)

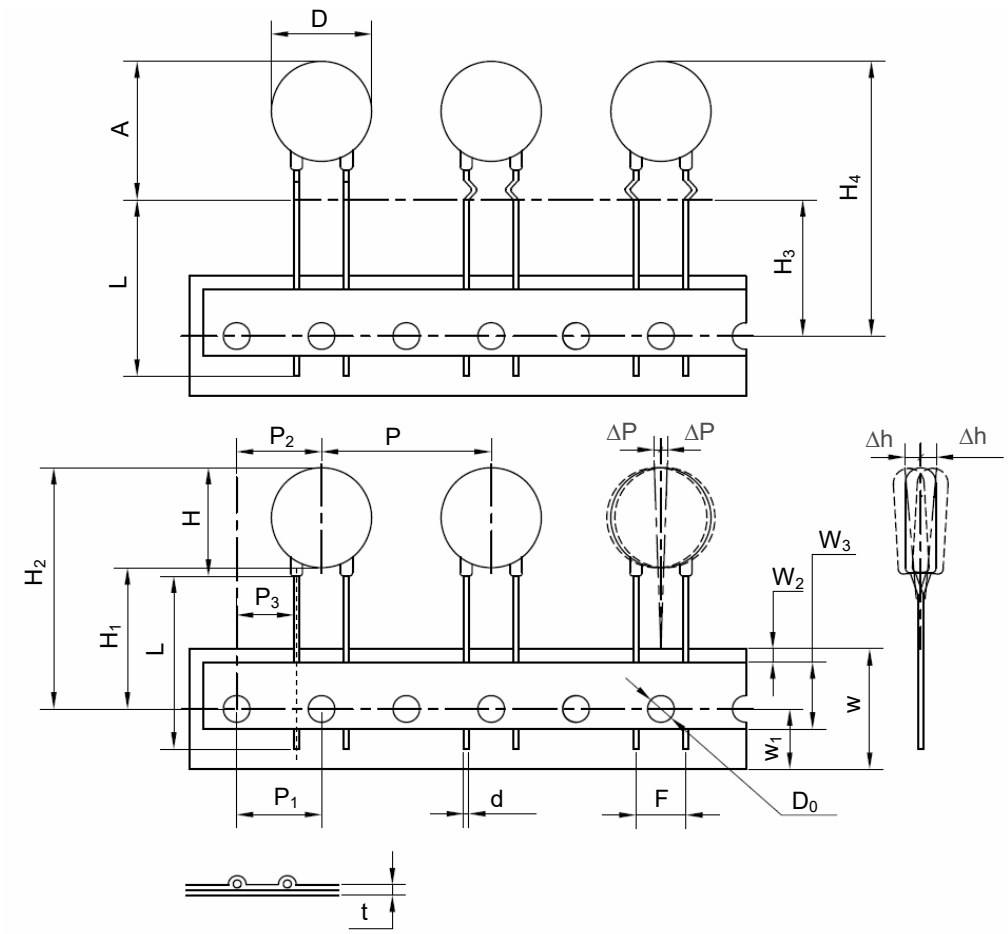

Dimensions (mm)	
P	25.4±1.0
P_1	12.7±0.3
P_2	12.7±1.3
P_3	8.95±0.7
ΔP(max.)	1.0
W	18.0±1.0
W_1	9.0±1.0
W_2(max.)	3.0
W_3	10.0±2.0
H(max.)	18.5
H_1	18.0
H_2(max.)	$40.0^{+2.0}_{-0}$
H_3	18.0
H_4(max.)	$42.0^{+2.0}_{-0}$
Δh(max.)	2.0
t (max.)	0.6
D(max.)	16.5
D_0	4.0±0.2
d	0.80±0.05
A(max.)	21.5
F	7.5±0.5
L(min.)	/

- Tape Packaging Quantity & Weight.

Series	Nominal Varistor Voltage	Box	Carton	G. W / Carton (365 × 265 × 415)
14D	(V)	(PCS)	(PCS)	(kg)±10%
	112 ~ 122	250	1750	10 ~ 12
	681 ~ 102	300	2100	9 ~ 12
	471 ~ 621	400	2800	9 ~ 11
	301 ~ 431	500	3500	8 ~ 10
	680			9
	390 ~ 560	600	4200	7 ~ 9
	820 ~ 271			6 ~ 9
	220 ~ 330	700	4900	6 ~ 8

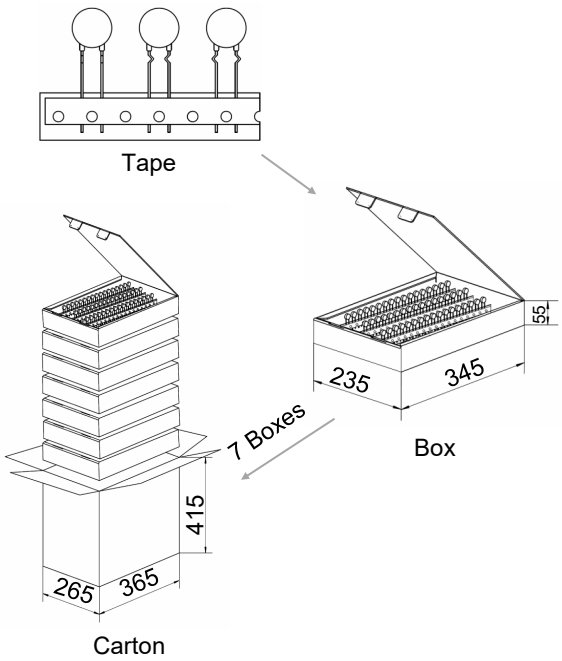

All Rights Reserved by Xiamen SET Electronics Co., Ltd. 2024-2026 V1.1

Packaging Information

- Tape Packaging (Code: 0EB)

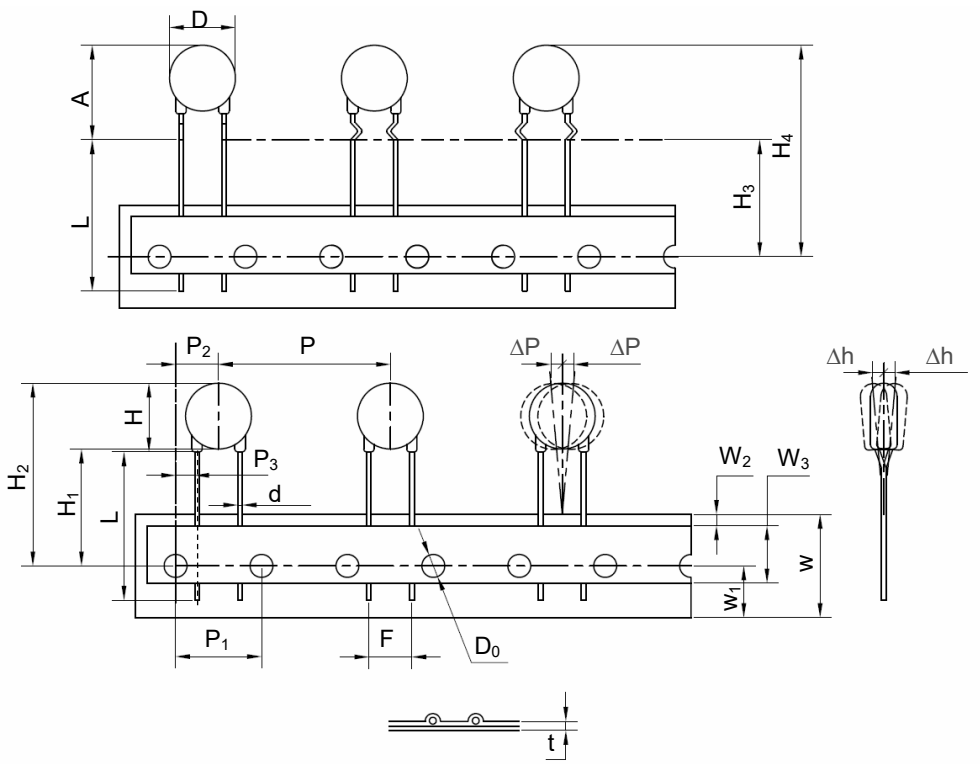

Dimensions (mm)	
P	30.0±1.0
P_1	15.0±0.3
P_2	7.5±1.3
P_3	3.75±0.7
ΔP(max.)	1.0
W	18.0±1.0
W_1	9.0±1.0
W_2(max.)	3.0
W_3	10.0±2.0
H(max.)	18.5
H_1	18.0
H_2(max.)	$40.0^{+2.0}_{-0}$
H_3	18.0
H_4(max.)	$42.0^{+2.0}_{-0}$
Δh(max.)	2.0
t (max.)	0.6
D(max.)	16.5
D_0	4.0±0.2
d	0.80±0.05
A(max.)	21.5
F	7.5±0.5
L(min.)	/

- Tape Packaging Quantity & Weight.

Series	Nominal Varistor Voltage	Box	Carton	G. W / Carton (365 × 265 × 415)
14D	(V)	(PCS)	(PCS)	(kg)±10%
	112 ~ 122	200	1400	8 ~ 9
	821 ~ 102	250	1750	8 ~ 9
	681 ~ 751	300	2100	8 ~ 9
	511 ~ 621	350	2450	8 ~ 9
	391 ~ 471			7 ~ 9
	301 ~ 361	450	3150	7 ~ 9
	680			9
	241 ~ 271	500	3500	6 ~ 7
	151			7
	470 ~ 560			6 ~ 8
	181 ~ 221	550	3850	6 ~ 7
	101 ~ 121			
	330 ~ 390			
	820	600	4200	6
	220 ~ 270			5 ~ 6

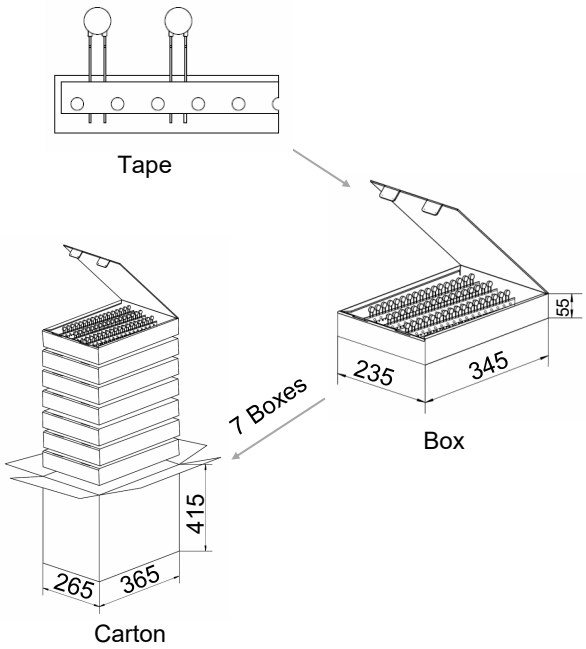

All Rights Reserved by Xiamen SET Electronics Co., Ltd. 2024-2026 V1.1

Packaging Information

- Tape Packaging (Code: 1EB)

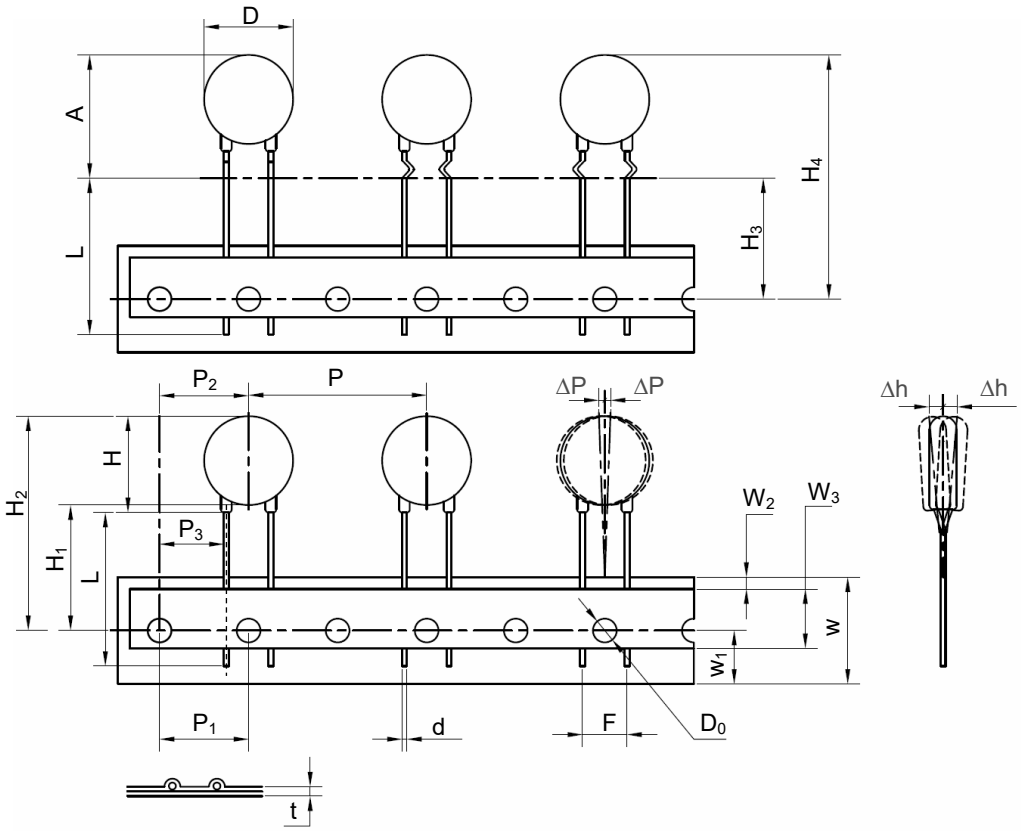

Dimensions (mm)	
P	30.0±1.0
P_1	15.0±0.3
P_2	15.0±1.3
P_3	11.25±0.7
ΔP(max.)	1.0
W	18.0±1.0
W_1	9.0±1.0
W_2(max.)	3.0
W_3	10.0±2.0
H(max.)	18.5
H_1	18.0
H_2(max.)	$40.0^{+2.0}_{-0}$
H_3	18.0
H_4(max.)	$42.0^{+2.0}_{-0}$
Δh(max.)	2.0
t (max.)	0.6
D(max.)	16.5
D_0	4.0±0.2
d	0.80±0.05
A(max.)	21.5
F	7.5±0.5
L(min.)	/

- Tape Packaging Quantity & Weight.

Series	Nominal Varistor Voltage	Box	Carton	G. W / Carton (365 × 265 × 415)
	(V)	(PCS)	(PCS)	(kg)±10%
14D	112 ~ 122	200	1400	8 ~ 9
	821 ~ 102	250	1750	8 ~ 9
	681 ~ 751	300	2100	8 ~ 9
	511 ~ 621	350	2450	8 ~ 9
	391 ~ 471			7 ~ 9
	301 ~ 361	450	3150	7 ~ 9
	680			9
	241 ~ 271	500	3500	6 ~ 7
	151			7
	470 ~ 560			6 ~ 8
	181 ~ 221	550	3850	6 ~ 7
	101 ~ 121			
	330 ~ 390			
	820	600	4200	6
	220 ~ 270			5 ~ 6

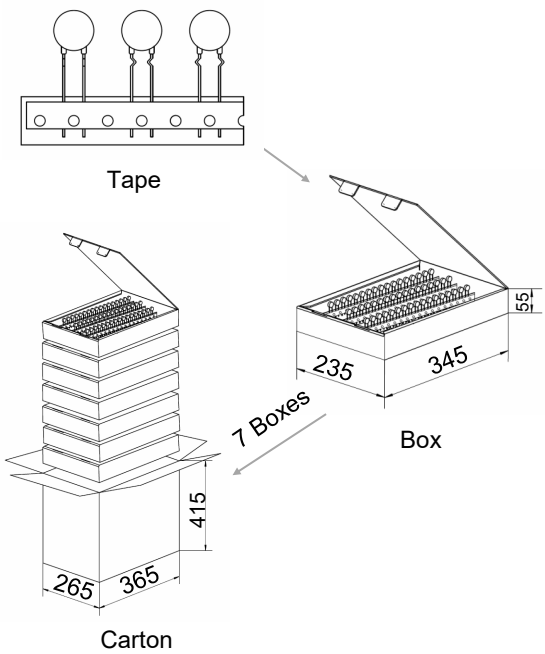

All Rights Reserved by Xiamen SET Electronics Co., Ltd. 2024-2026 V1.1

Packaging Information

- Tape Packaging (Code: 1AR)

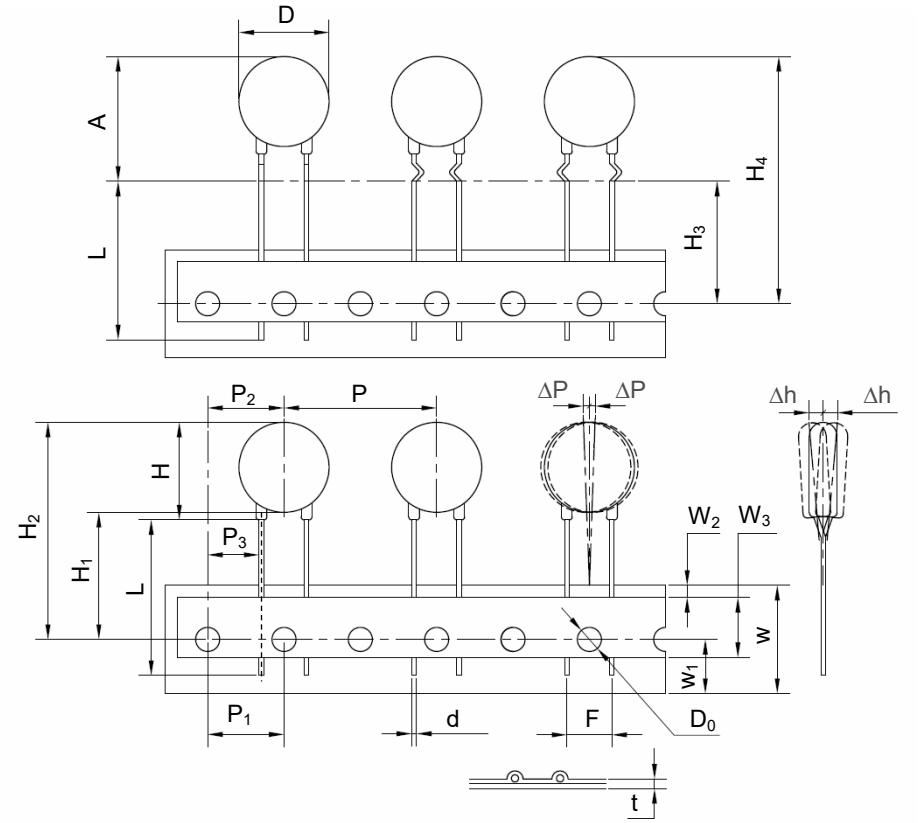

Dimensions (mm)	
P	25.4±1.0
P_1	12.7±0.3
P_2	12.7±1.3
P_3	8.95±0.7
ΔP(max.)	1.0
W	18.0±1.0
W_1	9.0±1.0
W_2(max.)	3.0
W_3	10.0±2.0
H(max.)	18.5
H_1	18.0
H_2(max.)	$40.0^{+2.0}_{-0}$
H_3	18.0
H_4(max.)	$42.0^{+2.0}_{-0}$
Δh(max.)	2.0
t (max.)	0.6
D(max.)	16.5
D_0	4.0±0.2
d	0.80±0.05
A(max.)	21.5
F	7.5±0.5
L(min.)	/

- Tape Packaging Quantity & Weight.

Series	Nominal Varistor Voltage	Box	Carton	G. W / Carton (375 × 335 × 385)
14D	(V)	(PCS)	(PCS)	(kg)±10%
	220 ~ 301	650	3250	4 ~ 8
	331 ~ 681	400	2000	4 ~ 8
	751 ~ 122	250	1250	5 ~ 8

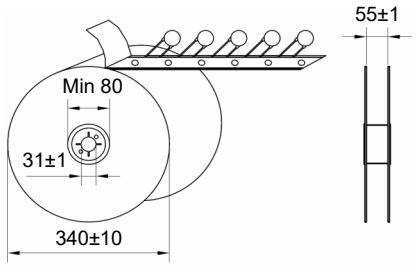

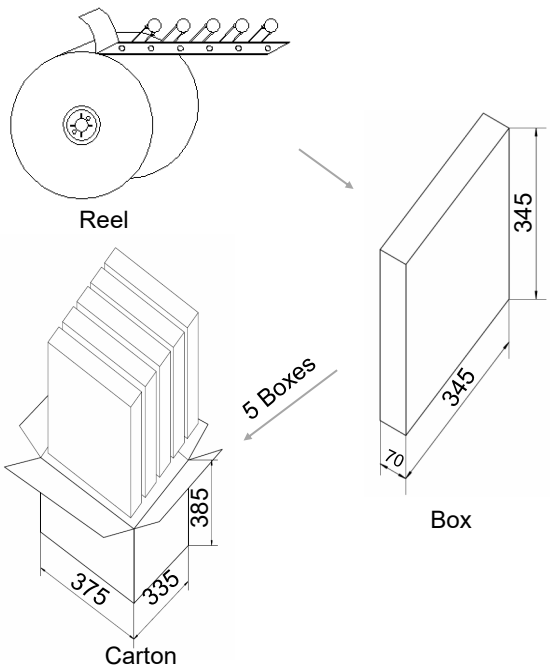

All Rights Reserved by Xiamen SET Electronics Co., Ltd. 2024-2026 V1.1

Dimensions (mm)

Model	L (Min.)	H (Max.)	T (Max.)	D (Max.)	d	F	F_1	A (Max.)
SFV20D220KT	7	25.5	5.3	23	1.00±0.05	10.0±0.5	1.3 ~ 2.7	27.5
SFV20D270KT	7	25.5	5.6	23	1.00±0.05	10.0±0.5	1.4 ~ 2.9	27.5
SFV20D330KT	7	25.5	5.9	23	1.00±0.05	10.0±0.5	1.5 ~ 3.1	27.5
SFV20D390KT	7	25.5	6.2	23	1.00±0.05	10.0±0.5	1.6 ~ 3.3	27.5
SFV20D470KT	7	25.5	5.4	23	1.00±0.05	10.0±0.5	1.4 ~ 2.9	27.5
SFV20D560KT	7	25.5	5.6	23	1.00±0.05	10.0±0.5	1.5 ~ 3.1	27.5
SFV20D680KT	7	25.5	5.9	23	1.00±0.05	10.0±0.5	1.6 ~ 3.4	27.5
SFV20D820KT	7	25.5	5.2	23	1.00±0.05	10.0±0.5	1.4 ~ 2.8	27.5
SFV20D101KT	7	25.5	5.4	23	1.00±0.05	10.0±0.5	1.5 ~ 3.0	27.5
SFV20D121KT	7	25.5	5.6	23	1.00±0.05	10.0±0.5	1.6 ~ 3.2	27.5
SFV20D151KT	7	25.5	5.9	23	1.00±0.05	10.0±0.5	1.7 ~ 3.5	27.5
SFV20D181KT	7	25.5	5.3	23	1.00±0.05	10.0±0.5	1.0 ~ 2.9	27.5
SFV20D201KT	7	25.5	5.5	23	1.00±0.05	10.0±0.5	1.0 ~ 3.0	27.5
SFV20D221KT	7	25.5	5.6	23	1.00±0.05	10.0±0.5	1.0 ~ 3.0	27.5
SFV20D241KT	7	25.5	5.7	23	1.00±0.05	10.0±0.5	1.1 ~ 3.1	27.5
SFV20D271KT	7	25.5	5.9	23	1.00±0.05	10.0±0.5	1.3 ~ 3.3	27.5
SFV20D301KT	7	25.5	6.1	23	1.00±0.05	10.0±0.5	1.4 ~ 3.4	27.5
SFV20D331KT	7	25.5	6.2	23	1.00±0.05	10.0±0.5	1.6 ~ 3.6	27.5
SFV20D361KT	7	25.5	6.4	23	1.00±0.05	10.0±0.5	1.7 ~ 3.7	27.5
SFV20D391KT	7	25.5	6.6	23	1.00±0.05	10.0±0.5	1.9 ~ 3.9	27.5
SFV20D431KT	7	25.5	6.8	23	1.00±0.05	10.0±0.5	2.0 ~ 4.0	27.5
SFV20D471KT	7	25.5	7.1	23	1.00±0.05	10.0±0.5	2.2 ~ 4.2	27.5
SFV20D511KT	7	25.5	7.3	23	1.00±0.05	10.0±0.5	2.4 ~ 4.4	27.5
SFV20D561KT	7	25.5	7.6	23	1.00±0.05	10.0±0.5	2.7 ~ 4.7	27.5
SFV20D621KT	7	25.5	8.0	23	1.00±0.05	10.0±0.5	3.0 ~ 5.0	27.5
SFV20D681KT	7	25.5	8.4	23	1.00±0.05	10.0±0.5	3.2 ~ 5.2	27.5
SFV20D751KT	7	25.5	8.8	23	1.00±0.05	10.0±0.5	3.6 ~ 5.6	27.5
SFV20D821KT	7	25.5	9.2	23	1.00±0.05	10.0±0.5	3.9 ~ 5.9	27.5
SFV20D911KT	7	25.5	9.8	23	1.00±0.05	10.0±0.5	4.3 ~ 6.3	27.5
SFV20D102KT	7	25.5	10.3	23	1.00±0.05	10.0±0.5	4.8 ~ 6.8	27.5
SFV20D112KT	7	25.5	10.9	23	1.00±0.05	10.0±0.5	5.2 ~ 7.2	27.5
SFV20D122KT	7	25.5	11.5	23	1.00±0.05	10.0±0.5	5.7 ~ 7.7	27.5

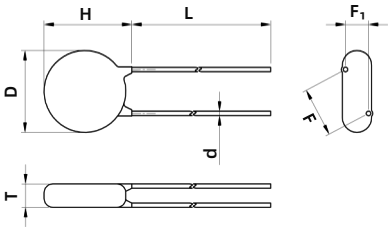

Straight Lead (A)

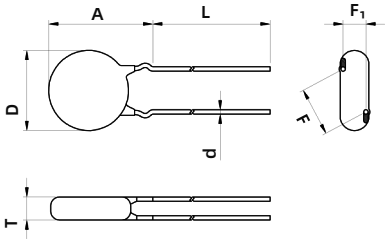

Outward Crimp (C)

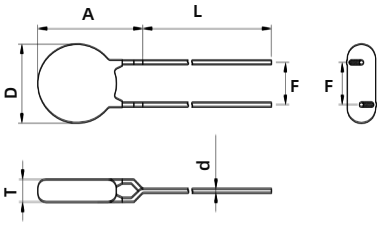

Inline Crimp (D)

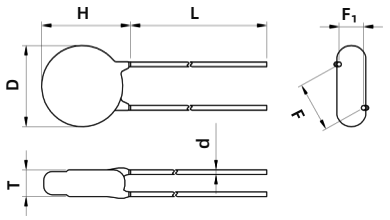

Little Straight Lead (I)

Note:
The above data is for reference only.

All Rights Reserved by Xiamen SET Electronics Co., Ltd. 2024-2026 V1.1

Specification

Model	Surge Level	Max. Continuous Operating Voltage		Varistor Voltage @1 mA DC		Clamping Voltage (Max.)		Max. Peak Current (1 time, 8/20 μs)	Max. Energy (10/1000 μs)	Typical Capacitance (For reference only) @1 kHz	Agency Information			
		VAC	VDC	Min.	Max.	V_C	I_P	S		(pF)	UL	cUL	TUV	CQC
		(V)	(V)	(V)	(V)	(V)	(A)	(kA)	(J)					
SFV20D220KT	S	14	18	20	24	43	20	2	14	18500	○	○	●	●
SFV20D270KT	S	17	22	24	31	53	20	2	16	13000	○	○	●	●
SFV20D330KT	S	20	26	30	36	65	20	2	23	11500	○	○	●	●
SFV20D390KT	S	25	31	35	43	77	20	2	26	8500	○	○	●	●
SFV20D470KT	S	30	38	42	52	93	20	2	30	8000	○	○	●	●
SFV20D560KT	S	35	45	50	62	110	20	2	41	7000	○	○	●	●
SFV20D680KT	S	40	56	61	75	135	20	2	46	6200	○	○	●	●
SFV20D820KT	S	50	65	74	90	135	100	6.5	38	4900	●	●	●	●
SFV20D101KT	S	60	85	90	110	165	100	6.5	45	4000	●	●	●	●
SFV20D121KT	S	75	100	108	132	200	100	6.5	55	3400	●	●	●	●
SFV20D151KT	S	95	125	135	165	250	100	6.5	70	2700	●	●	●	●
SFV20D181KT	S	115	150	162	198	300	100	6.5	85	2200	●	●	●	●
SFV20D201KT	S	130	170	180	220	340	100	6.5	95	2000	●	●	●	●
SFV20D221KT	S	140	180	198	242	360	100	6.5	100	1800	●	●	●	●
SFV20D241KT	S	150	200	216	264	395	100	6.5	108	1650	●	●	●	●
SFV20D271KT	S	175	225	243	297	455	100	6.5	127	1500	●	●	●	●
SFV20D301KT	S	190	250	270	330	500	100	6.5	136	1300	●	●	●	●
SFV20D331KT	S	210	275	297	363	550	100	6.5	150	1200	●	●	●	●
SFV20D361KT	S	230	300	324	396	595	100	6.5	163	1100	●	●	●	●
SFV20D391KT	S	250	320	351	429	650	100	6.5	180	1000	●	●	●	●
SFV20D431KT	S	275	350	387	473	710	100	6.5	190	930	●	●	●	●
SFV20D471KT	S	300	385	423	517	775	100	6.5	220	850	●	●	●	●
SFV20D511KT	S	320	415	459	561	845	100	6.5	220	780	●	●	●	●
SFV20D561KT	S	350	460	504	616	925	100	6.5	220	710	●	●	●	●
SFV20D621KT	S	385	505	558	682	1025	100	6.5	220	650	●	●	●	●
SFV20D681KT	S	420	560	612	748	1120	100	6.5	230	600	●	●	●	●
SFV20D751KT	S	460	615	675	825	1240	100	6.5	255	530	●	●	●	●
SFV20D821KT	S	510	670	738	902	1355	100	6.5	282	500	●	●	●	●
SFV20D911KT	S	550	745	819	1001	1500	100	6.5	310	440	●	●	●	●
SFV20D102KT	S	625	825	900	1100	1650	100	6.5	342	400	●	●	●	●
SFV20D112KT	S	680	895	990	1210	1815	100	6.5	383	360	●	●	●	●
SFV20D122KT	S	750	990	1080	1320	1980	100	6.5	408	320	●	●	●	●

●: Approved ○: Unauthorized ● RoHS & REACH Compliant

All Rights Reserved by Xiamen SET Electronics Co., Ltd. 2024-2026 V1.1

Model	Surge Level	Max. Continuous Operating Voltage		Varistor Voltage @1 mA DC		Clamping Voltage (Max.)		Max. Peak Current (1 time, 8/20 μs)	Max. Energy (10/1000 μs)	Typical Capacitance (For reference only) @1 kHz	Agency Information			
		VAC	VDC	Min.	Max.	V_C	I_P	K		(pF)				
		(V)	(V)	(V)	(V)	(V)	(A)	(kA)	(J)		UL	cUL	TUV	CQC
SFV20D220KT	K	14	18	20	24	43	20	3	16	18500	○	○	●	●
SFV20D270KT	K	17	22	24	31	53	20	3	19	13000	○	○	●	●
SFV20D330KT	K	20	26	30	36	65	20	3	24	11500	○	○	●	●
SFV20D390KT	K	25	31	35	43	77	20	3	28	8500	○	○	●	●
SFV20D470KT	K	30	38	42	52	93	20	3	34	8000	○	○	●	●
SFV20D560KT	K	35	45	50	62	110	20	3	41	7000	○	○	●	●
SFV20D680KT	K	40	56	61	75	135	20	3	49	6200	○	○	●	●
SFV20D820KT	K	50	65	74	90	135	100	10	56	4900	●	●	●	●
SFV20D101KT	K	60	85	90	110	165	100	10	70	4000	●	●	●	●
SFV20D121KT	K	75	100	108	132	200	100	10	85	3400	●	●	●	●
SFV20D151KT	K	95	125	135	165	250	100	10	106	2700	●	●	●	●
SFV20D181KT	K	115	150	162	198	300	100	10	130	2200	●	●	●	●
SFV20D201KT	K	130	170	180	220	340	100	10	140	2000	●	●	●	●
SFV20D221KT	K	140	180	198	242	360	100	10	155	1800	●	●	●	●
SFV20D241KT	K	150	200	216	264	395	100	10	168	1650	●	●	●	●
SFV20D271KT	K	175	225	243	297	455	100	10	190	1500	●	●	●	●
SFV20D301KT	K	190	250	270	330	500	100	10	210	1300	●	●	●	●
SFV20D331KT	K	210	275	297	363	550	100	10	228	1200	●	●	●	●
SFV20D361KT	K	230	300	324	396	595	100	10	255	1100	●	●	●	●
SFV20D391KT	K	250	320	351	429	650	100	10	275	1000	●	●	●	●
SFV20D431KT	K	275	350	387	473	710	100	10	305	930	●	●	●	●
SFV20D471KT	K	300	385	423	517	775	100	10	350	850	●	●	●	●
SFV20D511KT	K	320	415	459	561	845	100	10	360	780	●	●	●	●
SFV20D561KT	K	350	460	504	616	925	100	10	380	710	●	●	●	●
SFV20D621KT	K	385	505	558	682	1025	100	10	390	650	●	●	●	●
SFV20D681KT	K	420	560	612	748	1120	100	10	400	600	●	●	●	●
SFV20D751KT	K	460	615	675	825	1240	100	10	420	530	●	●	●	●
SFV20D821KT	K	510	670	738	902	1355	100	10	460	500	●	●	●	●
SFV20D911KT	K	550	745	819	1001	1500	100	10	510	440	●	●	●	●
SFV20D102KT	K	625	825	900	1100	1650	100	10	565	400	●	●	●	●
SFV20D112KT	K	680	895	990	1210	1815	100	10	620	360	●	●	●	●
SFV20D122KT	K	750	990	1080	1320	1980	100	10	660	320	●	●	●	●

●: Approved ○: Unauthorized ● RoHS & REACH Compliant

All Rights Reserved by Xiamen SET Electronics Co., Ltd. 2024-2026 V1.1

Specification

Model	Surge Level	Max. Continuous Operating Voltage		Varistor Voltage @1 mA DC		Clamping Voltage (Max.)		Max. Peak Current (1 time, 8/20 μs)	Max. Energy (8/20 μs)	Typical Capacitance (For reference only) @1 kHz	Agency Information			
		VAC	VDC	Min.	Max.	V_C	I_P	H		(pF)				
		(V)	(V)	(V)	(V)	(V)	(A)	(kA)	(J)		UL	cUL	TUV	CQC
SFV20D201KT	H	130	170	180	220	340	100	13	300	2000	●	●	●	●
SFV20D221KT	H	140	180	198	242	360	100	13	320	1800	●	●	●	●
SFV20D241KT	H	150	200	216	264	395	100	13	340	1650	●	●	●	●
SFV20D271KT	H	175	225	243	297	455	100	13	380	1500	●	●	●	●
SFV20D301KT	H	190	250	270	330	500	100	13	400	1300	●	●	●	●
SFV20D331KT	H	210	275	297	363	550	100	13	440	1200	●	●	●	●
SFV20D361KT	H	230	300	324	396	595	100	13	470	1100	●	●	●	●
SFV20D391KT	H	250	320	351	429	650	100	13	510	1000	●	●	●	●
SFV20D431KT	H	275	350	387	473	710	100	13	550	930	●	●	●	●
SFV20D471KT	H	300	385	423	517	775	100	13	600	850	●	●	●	●
SFV20D511KT	H	320	415	459	561	845	100	13	650	780	●	●	●	●
SFV20D561KT	H	350	460	504	616	925	100	13	700	710	●	●	●	●
SFV20D621KT	H	385	505	558	682	1025	100	13	700	650	●	●	●	●
SFV20D681KT	H	420	560	612	748	1120	100	13	800	600	●	●	●	●

●: Approved ○: Unauthorized ● RoHS & REACH Compliant

All Rights Reserved by Xiamen SET Electronics Co., Ltd. 2024-2026 V1.1

Specification

Model	Surge Level	Max. Continuous Operating Voltage		Varistor Voltage @1 mA DC		Clamping Voltage (Max.)		Pulse Impact Performance (40 times) (1.2/50 μs & 8/20 μs)	Max. Energy (10/1000 μs)	Typical Capacitance (For reference only) @1 kHz	Agency Information			
		VAC	VDC	Min.	Max.	V_C	I_P	Q		(pF)	UL	cUL	TUV	CQC
		(V)	(V)	(V)	(V)	(V)	(A)	(kV)	(J)					
SFV20D201KT	Q	130	170	180	220	340	100	10	140	2000	●	●	●	●
SFV20D221KT	Q	140	180	198	242	360	100	10	155	1800	●	●	●	●
SFV20D241KT	Q	150	200	216	264	395	100	10	168	1650	●	●	●	●
SFV20D271KT	Q	175	225	243	297	455	100	10	190	1500	●	●	●	●
SFV20D301KT	Q	190	250	270	330	500	100	10	210	1300	●	●	●	●
SFV20D331KT	Q	210	275	297	363	550	100	10	228	1200	●	●	●	●
SFV20D361KT	Q	230	300	324	396	595	100	10	255	1100	●	●	●	●
SFV20D391KT	Q	250	320	351	429	650	100	10	275	1000	●	●	●	●
SFV20D431KT	Q	275	350	387	473	710	100	10	305	930	●	●	●	●
SFV20D471KT	Q	300	385	423	517	775	100	10	350	850	●	●	●	●
SFV20D511KT	Q	320	415	459	561	845	100	10	360	780	●	●	●	●
SFV20D561KT	Q	350	460	504	616	925	100	10	380	710	●	●	●	●
SFV20D621KT	Q	385	505	558	682	1025	100	10	390	650	●	●	●	●
SFV20D681KT	Q	420	560	612	748	1120	100	10	400	600	●	●	●	●

●: Approved ○: Unauthorized ● RoHS & REACH Compliant

All Rights Reserved by Xiamen SET Electronics Co., Ltd. 2024-2026 V1.1

Performance Curve (For reference only)

- Max. Peak Current Derating Curves

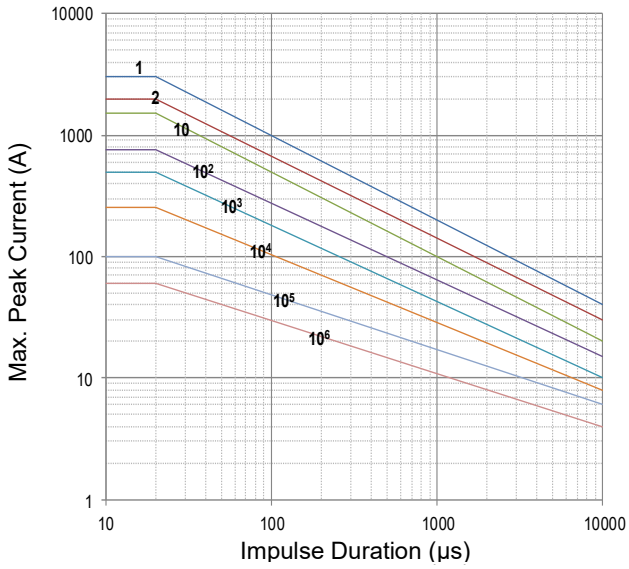

SFV20D220KT to SFV20D680KT

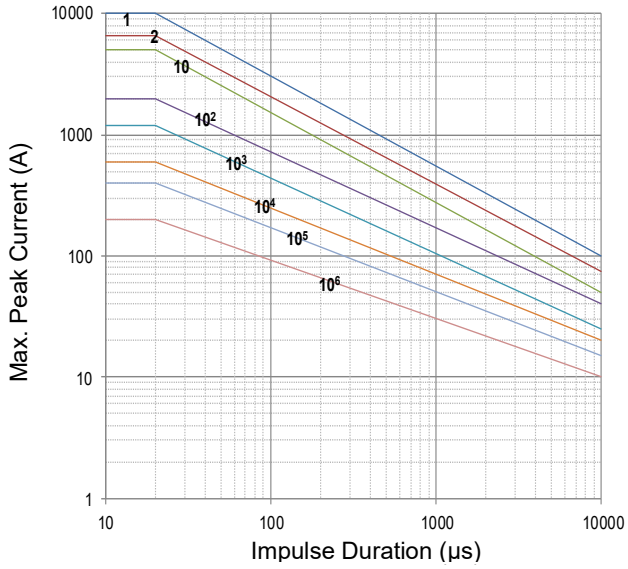

SFV20D820KT to SFV20D122KT

Note: 1, 2, 10, 10^2, 10^3, 10^4, 10^5, 10^6 Stand for Repetitions.

- Voltage-Current Characteristic Curves

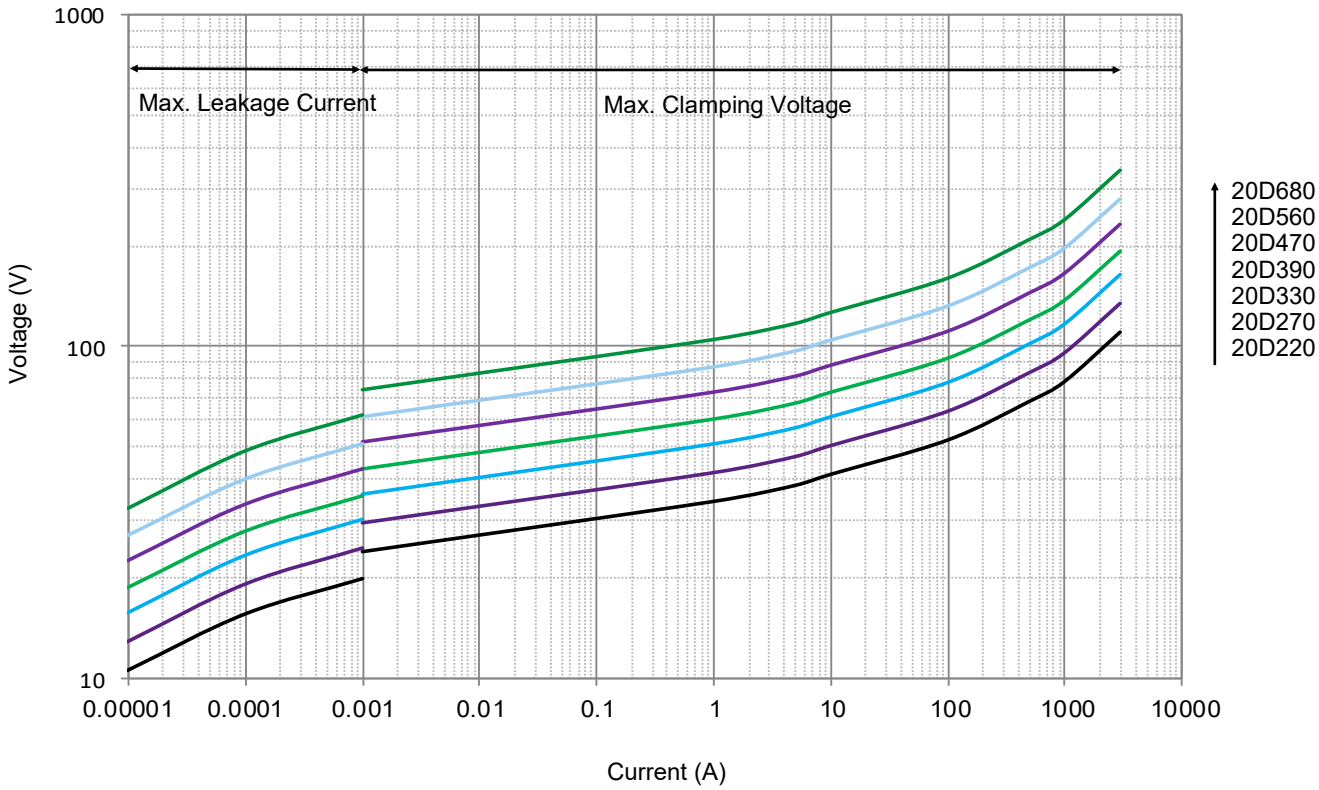

All Rights Reserved by Xiamen SET Electronics Co., Ltd. 2024-2026 V1.1

- Voltage-Current Characteristic Curves

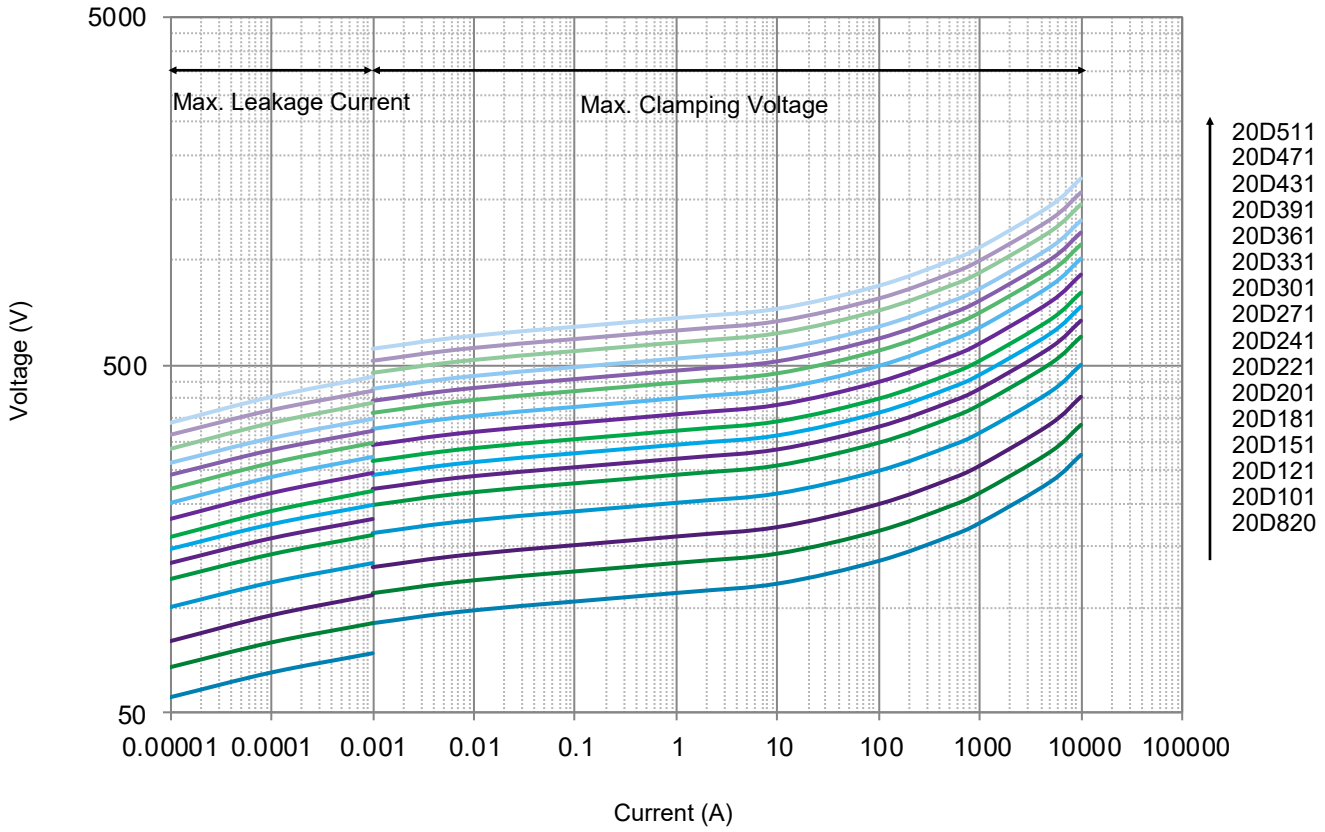

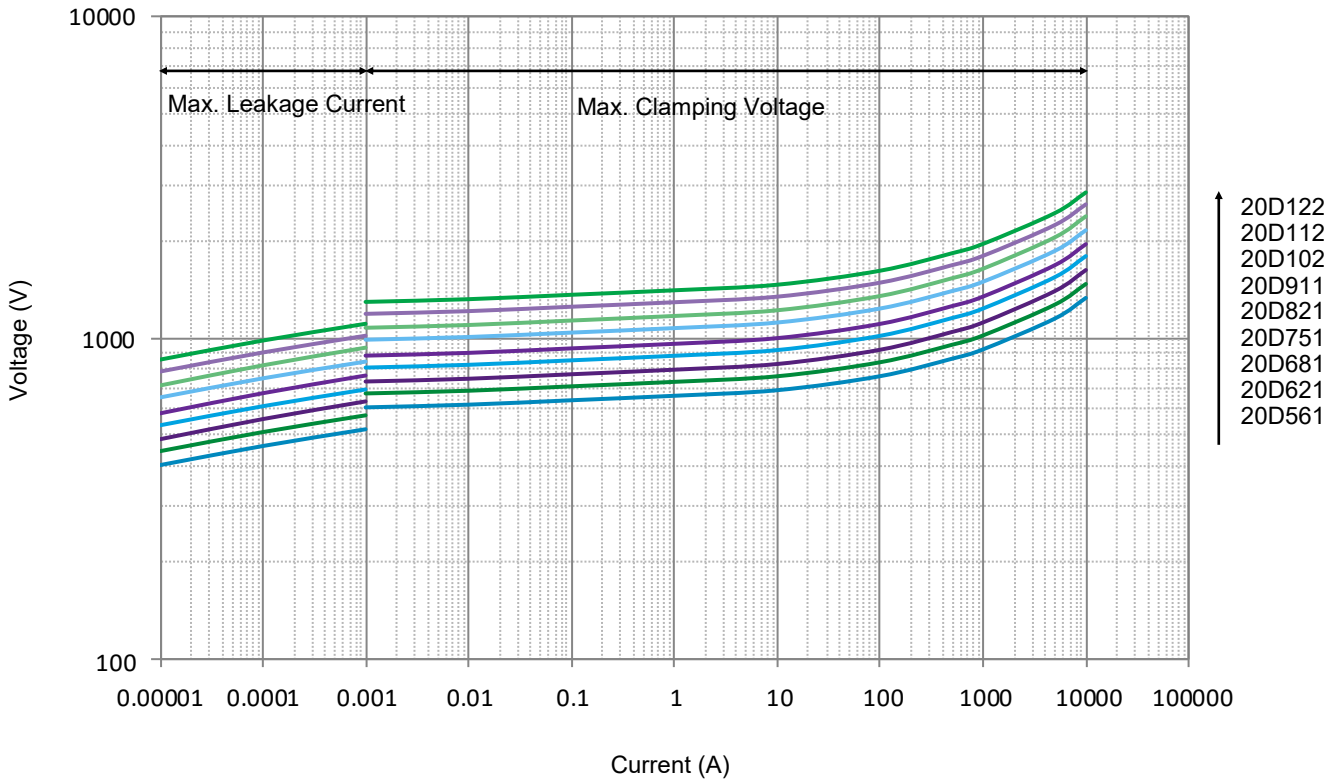

All Rights Reserved by Xiamen SET Electronics Co., Ltd. 2024-2026 V1.1

Packaging Information

- Bulk Packaging (Code: BUL)
- Bulk Packaging Quantity & Weight.

Series	Nominal Varistor Voltage	PE Bag	Box	Carton	G. W / Carton (365 × 265 × 245)
	(V)	(PCS)	(PCS)	(PCS)	(kg)±10%
SFV20D T Series	220 ~ 471	100	200	1200	4 ~ 8
	511 ~ 821	80	160	960	6 ~ 13
	911 ~ 122				

Note:
Other lead length packaging information, please contact SETsafe | SETfuse.

All Dimensions in mm

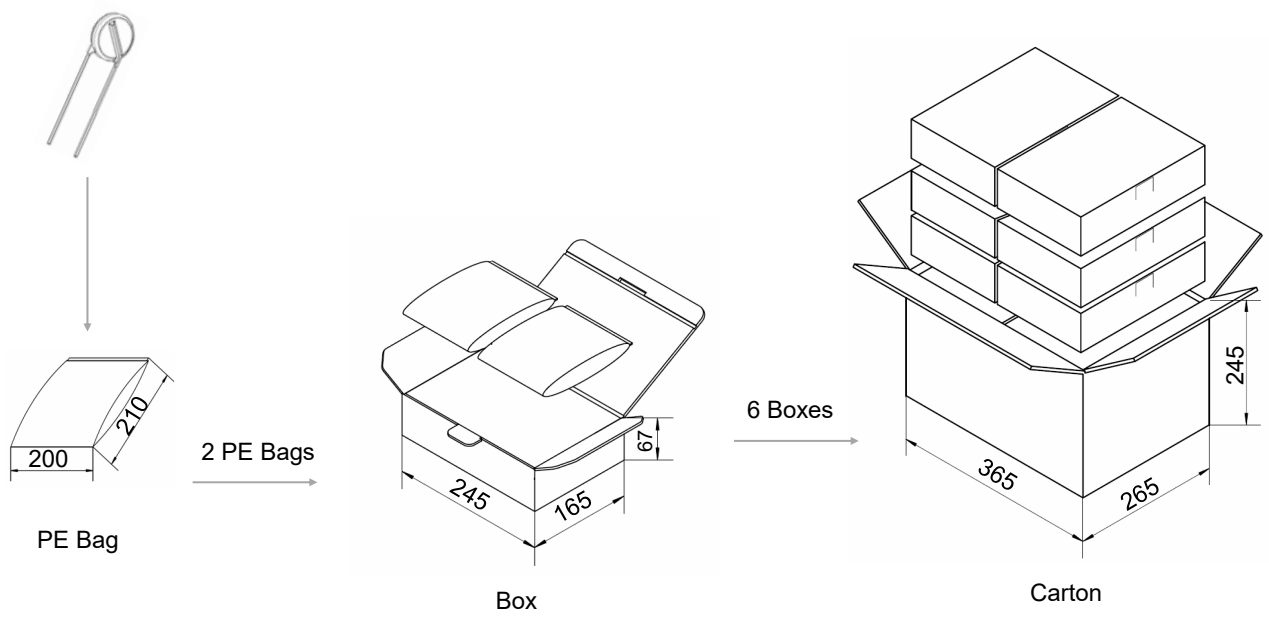

All Rights Reserved by Xiamen SET Electronics Co., Ltd. 2024-2026 V1.1

Packaging Information

- Tape Packaging (Code: 1EB)

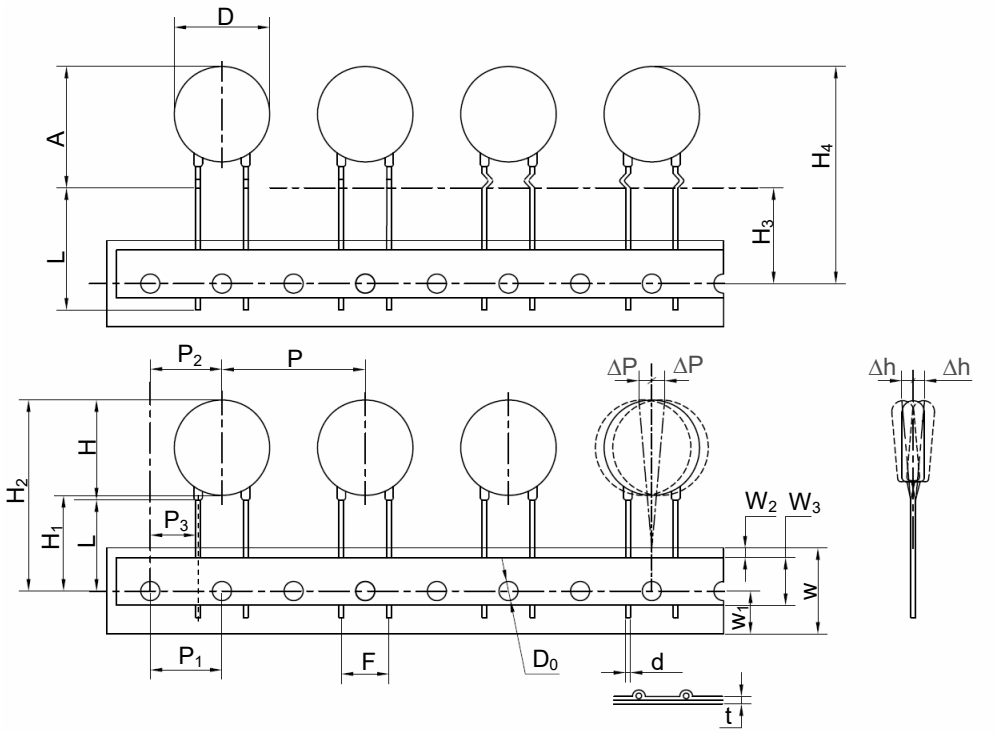

Dimensions (mm)	
P	30.0±1.0
P_1	15.0±0.3
P_2	15.0±1.3
P_3	10.0±1.0
ΔP(max.)	1.0
W	18.0±1.0
W_1	9.0±1.0
W_2(max.)	3.0
W_3	10.0±2.0
H(max.)	25.5
H_1	18.0
H_2(max.)	$45.0^{+2.0}_{-0}$
H_3	18.0
H_4(max.)	$48.0^{+2.0}_{-0}$
Δh(max.)	2.0
t (max.)	0.6
D(max.)	23.0
D_0	4.0±0.2
d	1.00±0.05
A(max.)	27.5
F	10.0±0.5
L(min.)	/

- Tape Packaging Quantity & Weight.

Series	Nominal Varistor Voltage	Box	Carton	G. W / Carton (365 × 265 × 415)
	(V)	(PCS)	(PCS)	(kg)±10%
20D	102 ~ 122	200	1200	14 ~ 16
	751 ~ 911	250	1500	14 ~ 16
	561 ~ 681	300	1800	13 ~ 15
	431 ~ 511	350	2100	13 ~ 14
	331 ~ 391	400	2400	12 ~ 14
	560 ~ 680			12 ~ 13
	241 ~ 301	450	2700	11 ~ 13
	390 ~ 470			11 ~ 12
	181 ~ 221	500	3000	10 ~ 12
	820 ~ 121			10 ~ 11
	220 ~ 330			9 ~ 11

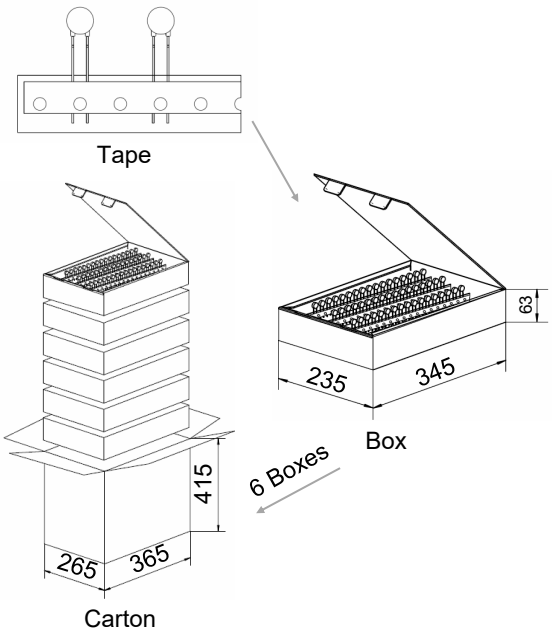

All Rights Reserved by Xiamen SET Electronics Co., Ltd. 2024-2026 V1.1

Packaging Information

- Tape Packaging (Code: 1AB)

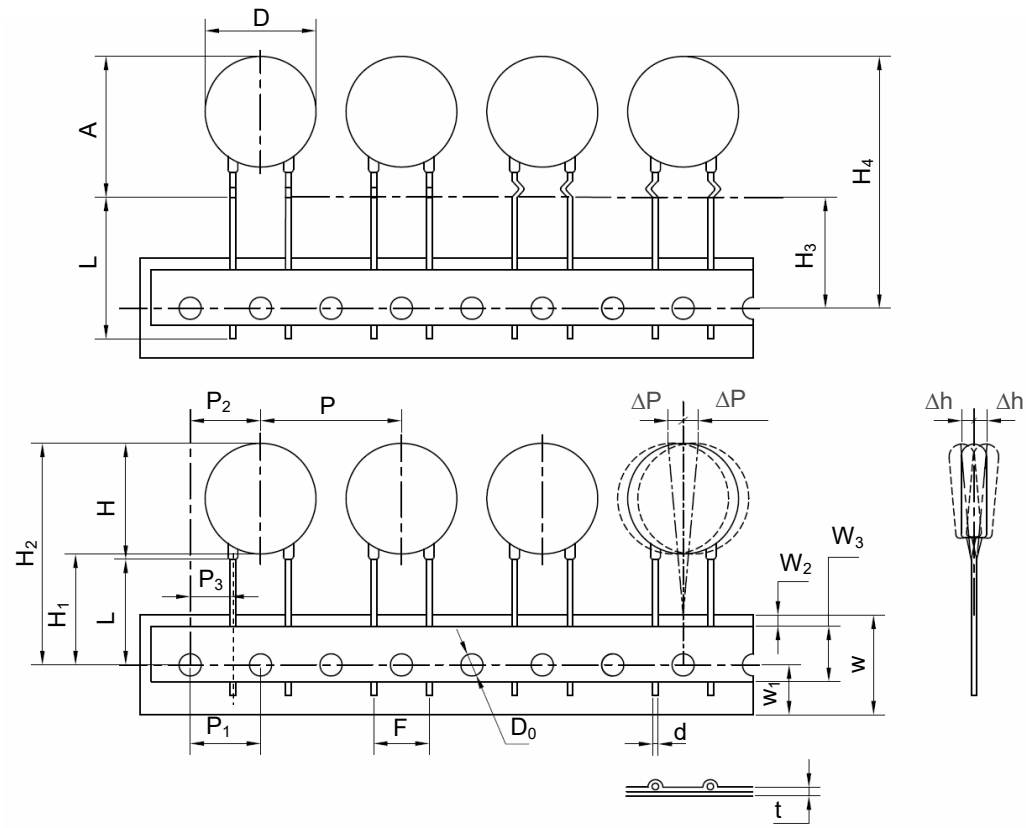

Dimensions (mm)	
P	25.4±1.0
P_1	12.7±0.3
P_2	12.7±1.3
P_3	7.7±0.7
ΔP(max.)	1.0
W	18.0±1.0
W_1	9.0±1.0
W_2(max.)	3.0
W_3	10.0±2.0
H(max.)	25.5
H_1	18.0
H_2(max.)	$45.0^{+2.0}_{-0}$
H_3	18.0
H_4(max.)	$48.0^{+2.0}_{-0}$
Δh(max.)	2.0
t (max.)	0.6
D(max.)	23.0
D_0	4.0±0.2
d	1.00±0.05
A(max.)	27.5
F	10.0±1.0
L(min.)	/

- Tape Packaging Quantity & Weight.

Series	Nominal Varistor Voltage	Box	Carton	G. W / Carton (365 × 265 × 415)
	(V)	(PCS)	(PCS)	(kg)±10%
20D	102 ~ 122	250	1500	19 ~ 22
	751 ~ 911	300	1800	18 ~ 20
	621 ~ 681	350	2100	18 ~ 19
	471 ~ 561	400	2400	17 ~ 19
	391~ 431	450	2700	17 ~ 18
	680			17
	301 ~ 361	500	3000	17 ~ 18
	560			17
	221 ~ 271	550	3300	17
	151			16
	390 ~ 470			15 ~ 17
	181 ~ 201	600	3600	14 ~ 15
	820 ~ 121			13 ~ 15
	220 ~ 330			12 ~ 14

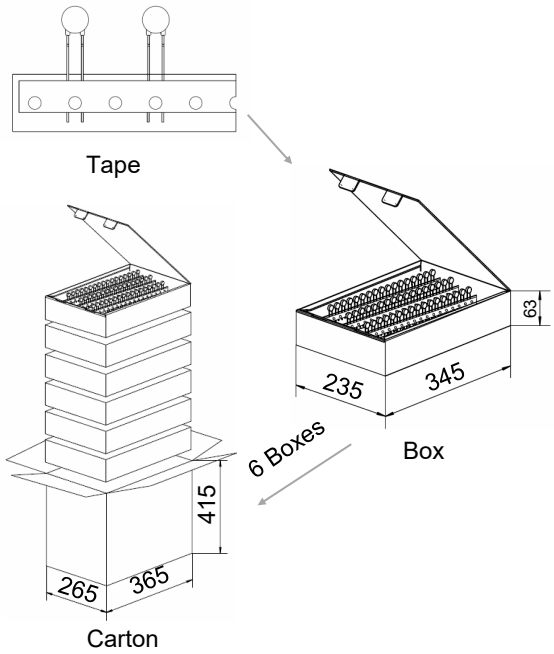

All Rights Reserved by Xiamen SET Electronics Co., Ltd. 2024-2026 V1.1

Dimensions (mm)

Model	L (Min.)	H (Max.)	T (Max.)	D (Max.)	d	F	F_1	A (Max.)
SFV25D470KT	7	32	5.6	28	1.20±0.05	10.0±1.0	1.4 ~ 3.1	35
SFV25D560KT	7	32	5.8	28	1.20±0.05	10.0±1.0	1.5 ~ 3.3	35
SFV25D680KT	7	32	6.1	28	1.20±0.05	10.0±1.0	1.6 ~ 3.6	35
SFV25D820KT	7	32	5.4	28	1.20±0.05	10.0±1.0	1.4 ~ 3.0	35
SFV25D101KT	7	32	5.6	28	1.20±0.05	10.0±1.0	1.5 ~ 3.2	35
SFV25D121KT	7	32	5.8	28	1.20±0.05	10.0±1.0	1.6 ~ 3.4	35
SFV25D151KT	7	32	6.1	28	1.20±0.05	10.0±1.0	1.7 ~ 3.7	35
SFV25D181KT	7	32	5.4	28	1.20±0.05	10.0±1.0	1.4 ~ 3.3	35
SFV25D201KT	7	32	5.5	28	1.20±0.05	10.0±1.0	1.5 ~ 3.4	35
SFV25D221KT	7	32	5.6	28	1.20±0.05	10.0±1.0	1.6 ~ 3.5	35
SFV25D241KT	7	32	5.7	28	1.20±0.05	10.0±1.0	1.7 ~ 3.6	35
SFV25D271KT	7	32	5.9	28	1.20±0.05	10.0±1.0	1.8 ~ 3.8	35
SFV25D301KT	7	32	6.1	28	1.20±0.05	10.0±1.0	1.6 ~ 3.6	35
SFV25D331KT	7	32	6.3	28	1.20±0.05	10.0±1.0	1.8 ~ 3.8	35
SFV25D361KT	7	32	6.5	28	1.20±0.05	10.0±1.0	1.9 ~ 3.9	35
SFV25D391KT	7	32	6.7	28	1.20±0.05	10.0±1.0	2.1 ~ 4.1	35
SFV25D431KT	7	32	6.9	28	1.20±0.05	10.0±1.0	2.2 ~ 4.2	35
SFV25D471KT	7	32	7.2	28	1.20±0.05	10.0±1.0	2.4 ~ 4.4	35
SFV25D511KT	7	32	7.4	28	1.20±0.05	10.0±1.0	2.6 ~ 4.6	35
SFV25D561KT	7	32	7.7	28	1.20±0.05	10.0±1.0	2.9 ~ 4.9	35
SFV25D621KT	7	32	8.1	28	1.20±0.05	10.0±1.0	3.2 ~ 5.2	35
SFV25D681KT	7	32	8.5	28	1.20±0.05	10.0±1.0	3.4 ~ 5.4	35
SFV25D751KT	7	32	8.9	28	1.20±0.05	10.0±1.0	3.8 ~ 5.8	35
SFV25D821KT	7	32	9.4	28	1.20±0.05	10.0±1.0	4.1 ~ 6.1	35
SFV25D911KT	7	32	9.9	28	1.20±0.05	10.0±1.0	4.5 ~ 6.5	35
SFV25D102KT	7	32	10.5	28	1.20±0.05	10.0±1.0	5.0 ~ 7.0	35
SFV25D112KT	7	32	11.1	28	1.20±0.05	10.0±1.0	5.4 ~ 7.4	35
SFV25D122KT	7	32	11.7	28	1.20±0.05	10.0±1.0	5.9 ~ 7.9	35

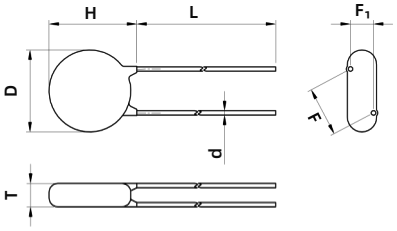

Straight Lead (A)

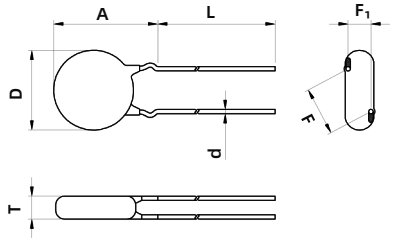

Outward Crimp (C)

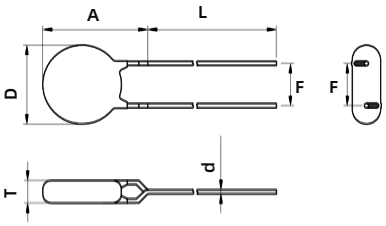

Inline Crimp (D)

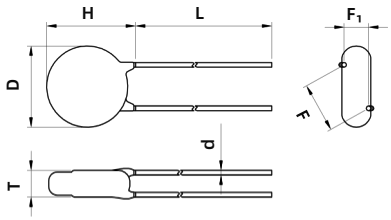

Little Straight Lead (I)

Note:
The above data is for reference only.

All Rights Reserved by Xiamen SET Electronics Co., Ltd. 2024-2026 V1.1

Specification

Model	Max. Continuous Operating Voltage		Varistor Voltage @1 mA DC		Clamping Voltage (Max.)		Max. Discharge Current (8/20 μs)		Max. Energy (10/1000 μs)	Typical Capacitance (For reference only) @1 kHz	Agency Information	
	VAC	VDC	Min.	Max.	V_C	I_P	I_n	I_{max}	(J)	(pF)	TUV	CQC
	(V)	(V)	(V)	(V)	(V)	(A)	(kA)	(kA)				
SFV25D470KT	30	38	42	52	93	30	3	6	50	11500	●	●
SFV25D560KT	35	45	50	62	110	30	3	6	60	10500	●	●
SFV25D680KT	40	56	61	75	135	30	3	6	70	9050	●	●
SFV25D820KT	50	65	74	90	135	150	10	20	80	7700	●	●
SFV25D101KT	60	85	90	110	165	150	10	20	100	6300	●	●
SFV25D121KT	75	100	108	132	200	150	10	20	120	5200	●	●
SFV25D151KT	95	125	135	165	250	150	10	20	160	4300	●	●
SFV25D181KT	115	150	162	198	300	150	10	20	175	3500	●	●
SFV25D201KT	130	170	180	220	340	150	10	20	190	3200	●	●
SFV25D221KT	140	180	198	242	360	150	10	20	200	2900	●	●
SFV25D241KT	150	200	216	264	395	150	10	20	220	2650	●	●
SFV25D271KT	175	225	243	297	455	150	10	20	255	2400	●	●
SFV25D301KT	190	250	270	330	500	150	10	20	275	2100	●	●
SFV25D331KT	210	275	297	363	550	150	10	20	300	1900	●	●
SFV25D361KT	230	300	324	396	595	150	10	20	330	1750	●	●
SFV25D391KT	250	320	351	429	650	150	10	20	360	1600	●	●
SFV25D431KT	275	350	387	473	710	150	10	20	380	1500	●	●
SFV25D471KT	300	385	423	517	775	150	10	20	400	1400	●	●
SFV25D511KT	320	415	459	561	845	150	10	20	420	1250	●	●
SFV25D561KT	350	460	504	616	925	150	10	20	440	1150	●	●
SFV25D621KT	385	505	558	682	1025	150	10	20	450	1050	●	●
SFV25D681KT	420	560	612	748	1120	150	10	20	460	950	●	●
SFV25D751KT	460	615	675	825	1240	150	10	20	510	850	●	●
SFV25D821KT	510	670	738	902	1355	150	10	20	520	830	●	●
SFV25D911KT	550	745	819	1001	1500	150	10	20	620	730	●	●
SFV25D102KT	625	825	900	1100	1650	150	10	20	690	660	●	●
SFV25D112KT	680	895	990	1210	1815	150	10	20	760	600	●	●
SFV25D122KT	750	990	1080	1320	1980	150	10	20	820	530	●	●

●: Approved ○: Unauthorized ● RoHS & REACH Compliant

All Rights Reserved by Xiamen SET Electronics Co., Ltd. 2024-2026 V1.1

Performance Curve (For reference only)

- Max. Peak Current Derating Curves

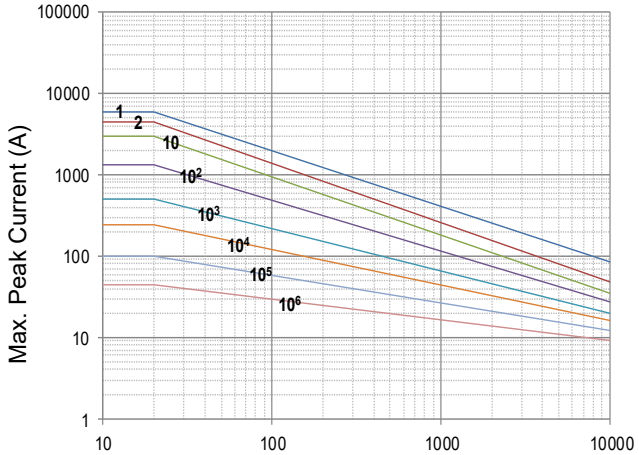

Impulse Duration (μs)
SFV25D470KT to SFV25D680KT

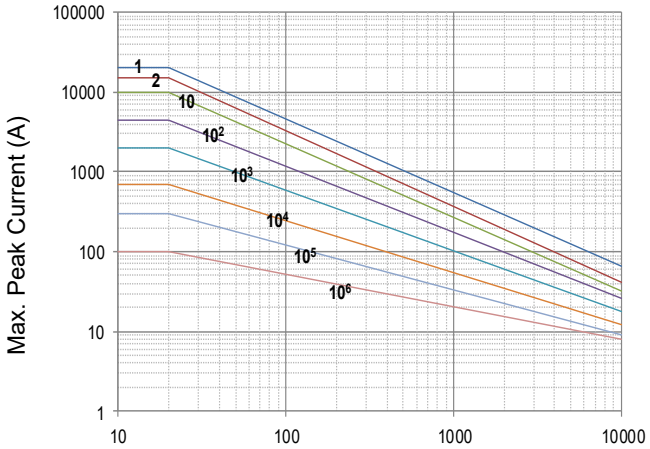

Impulse Duration (μs)
SFV25D820KT to SFV25D122KT

Note: 1, 2, 10, 10^2, 10^3, 10^4, 10^5, 10^6 Stand for Repetitions.

- Voltage-Current Characteristic Curves

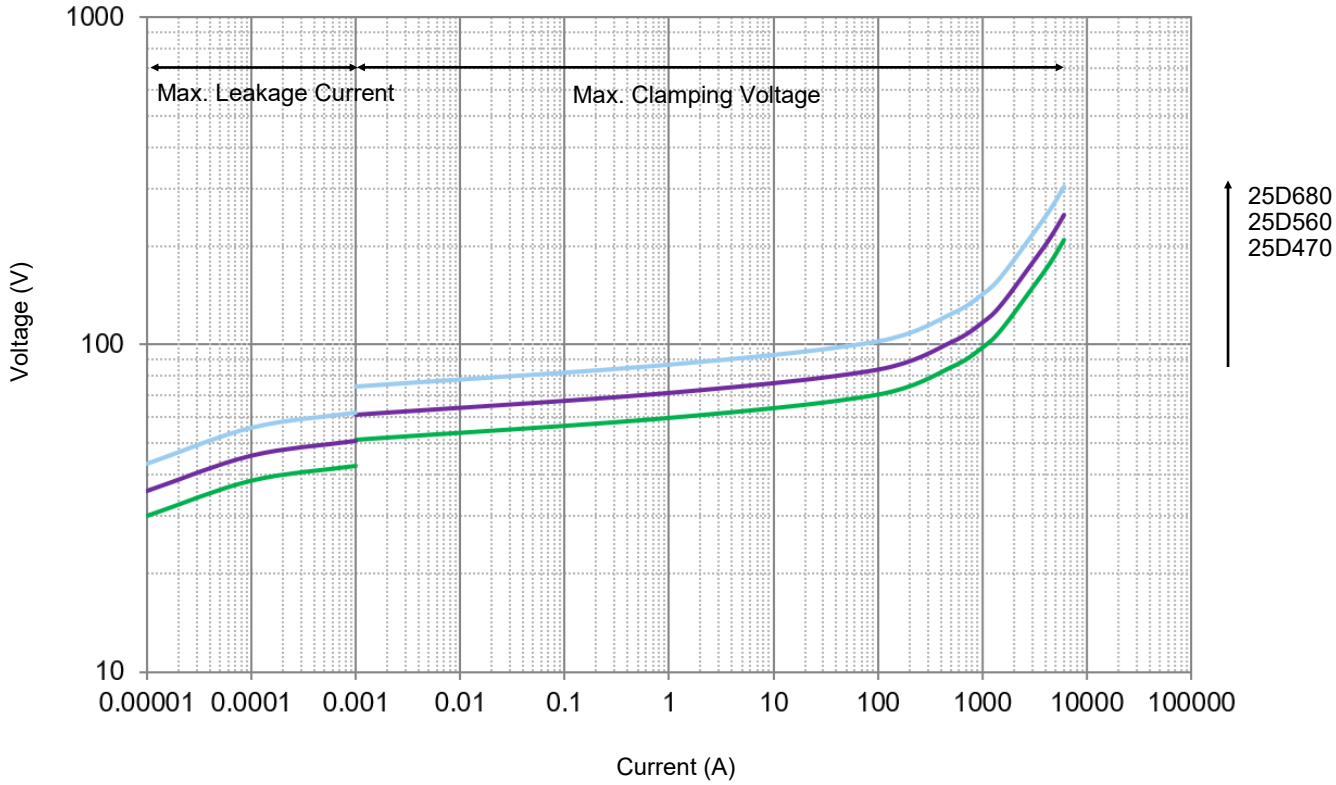

All Rights Reserved by Xiamen SET Electronics Co., Ltd. 2024-2026 V1.1

- Voltage-Current Characteristic Curves

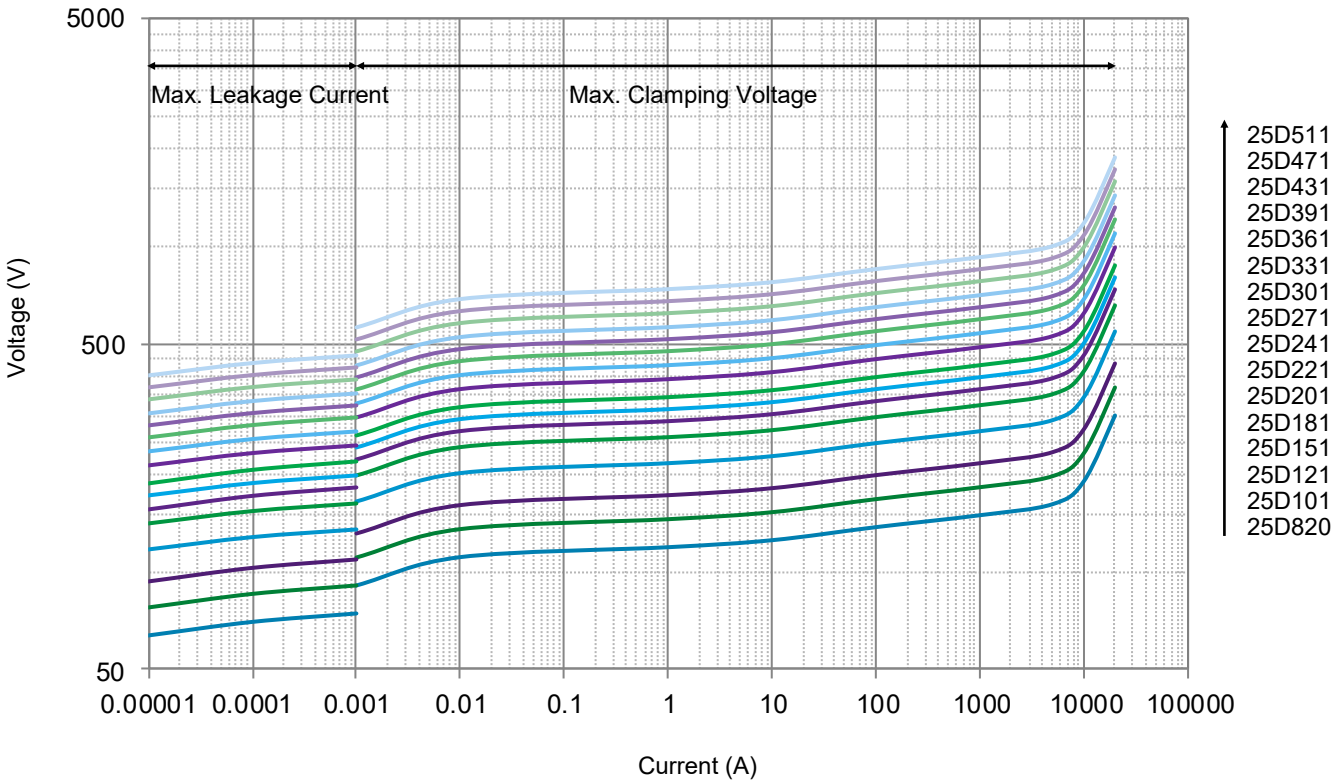

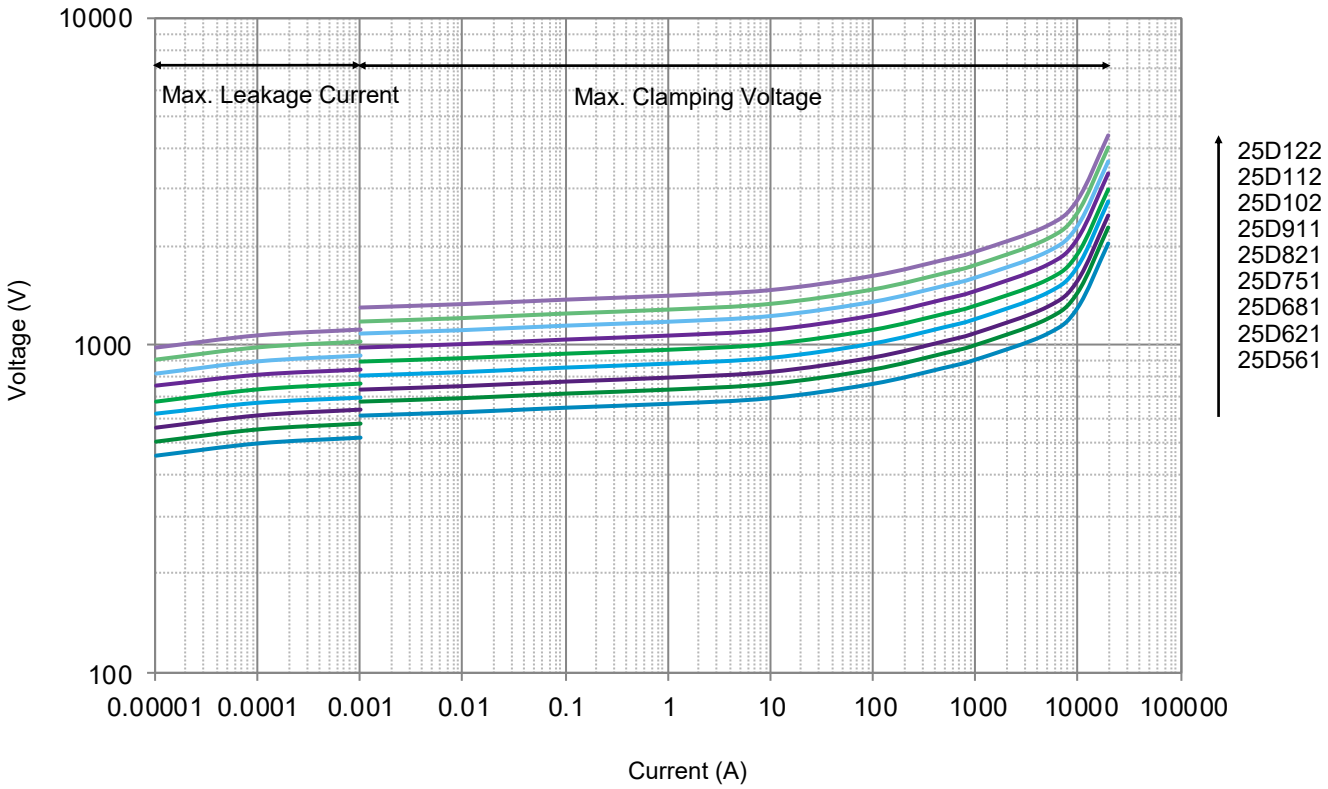

All Rights Reserved by Xiamen SET Electronics Co., Ltd. 2024-2026 V1.1

Packaging Information

- Bulk Packaging (Code: BUL)
- Bulk Packaging Quantity & Weight.

Series	Nominal Varistor Voltage	PE Bag	Box	Carton	G. W / Carton (365 × 265 × 245)
	(V)	(PCS)	(PCS)	(PCS)	(kg)±10%
SFV25D T Series	820 ~ 621	50	100	600	6 ~ 15
	681 ~ 122	50	100	600	16 ~ 25

Note:
Other lead length packaging information, please contact SETsafe | SETfuse.

All Dimensions in mm

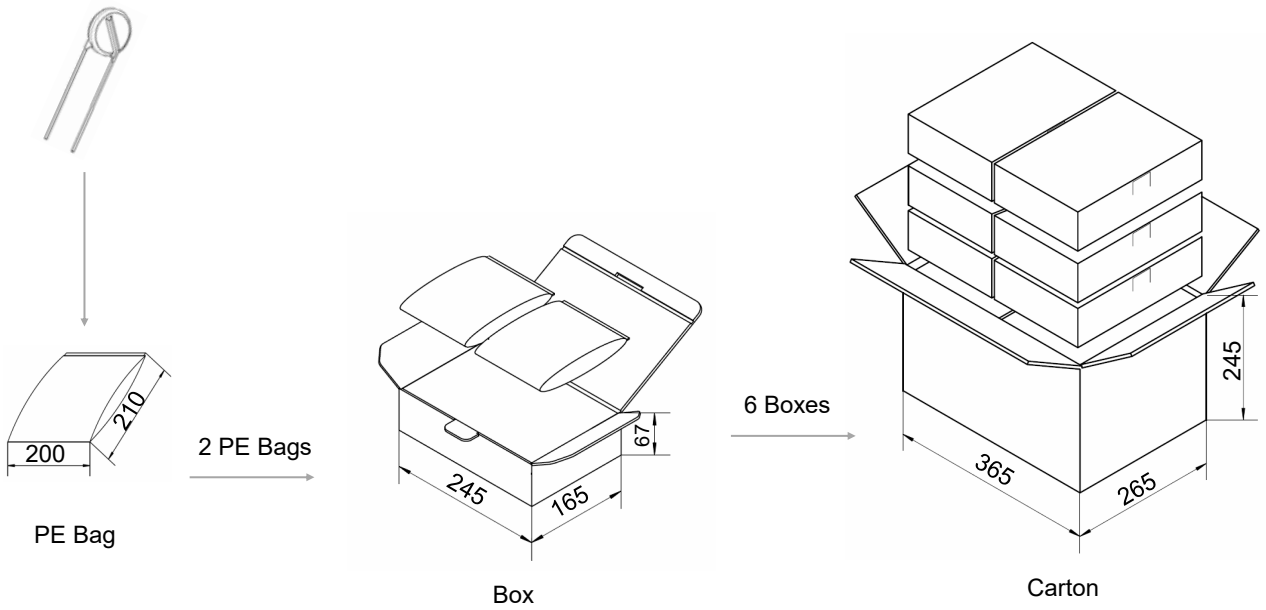

All Rights Reserved by Xiamen SET Electronics Co., Ltd. 2024-2026 V1.1

Dimensions (mm)

Model	L (Min.)	W (Max.)	H (Max.)	T (Max.)	d	F	F_1	A (Max.)
SFV10S220K	20	14.5	15	4.5	0.80±0.05	7.5±0.5	1.1 ~ 2.5	17.5
SFV10S270K	20	14.5	15	4.8	0.80±0.05	7.5±0.5	1.2 ~ 2.7	17.5
SFV10S330K	20	14.5	15	5.1	0.80±0.05	7.5±0.5	1.3 ~ 2.9	17.5
SFV10S390K	20	14.5	15	5.4	0.80±0.05	7.5±0.5	1.4 ~ 3.1	17.5
SFV10S470K	20	14.5	15	4.6	0.80±0.05	7.5±0.5	1.2 ~ 2.7	17.5
SFV10S560K	20	14.5	15	4.8	0.80±0.05	7.5±0.5	1.3 ~ 2.9	17.5
SFV10S680K	20	14.5	15	5.1	0.80±0.05	7.5±0.5	1.4 ~ 3.2	17.5
SFV10S820K	20	14.5	15	4.4	0.80±0.05	7.5±0.5	1.2 ~ 2.6	17.5
SFV10S101K	20	14.5	15	4.6	0.80±0.05	7.5±0.5	1.3 ~ 2.8	17.5
SFV10S121K	20	14.5	15	4.8	0.80±0.05	7.5±0.5	1.4 ~ 3.0	17.5
SFV10S151K	20	14.5	15	5.1	0.80±0.05	7.5±0.5	1.5 ~ 3.3	17.5
SFV10S181K	20	14.5	15	4.5	0.80±0.05	7.5±0.5	1.0 ~ 3.0	17.5
SFV10S201K	20	14.5	15	4.6	0.80±0.05	7.5±0.5	1.1 ~ 3.1	17.5
SFV10S221K	20	14.5	15	4.7	0.80±0.05	7.5±0.5	1.2 ~ 3.2	17.5
SFV10S241K	20	14.5	15	4.8	0.80±0.05	7.5±0.5	1.3 ~ 3.3	17.5
SFV10S271K	20	14.5	15	5.0	0.80±0.05	7.5±0.5	1.5 ~ 3.5	17.5
SFV10S301K	20	14.5	15	5.2	0.80±0.05	7.5±0.5	1.7 ~ 3.7	17.5
SFV10S331K	20	14.5	15	5.4	0.80±0.05	7.5±0.5	1.9 ~ 3.9	17.5
SFV10S361K	20	14.5	15	5.6	0.80±0.05	7.5±0.5	2.1 ~ 4.1	17.5
SFV10S391K	20	14.5	15	5.7	0.80±0.05	7.5±0.5	2.3 ~ 4.3	17.5
SFV10S431K	20	14.5	15	6.0	0.80±0.05	7.5±0.5	2.6 ~ 4.6	17.5
SFV10S471K	20	14.5	15	6.2	0.80±0.05	7.5±0.5	2.8 ~ 4.8	17.5
SFV10S511K	20	14.5	15	6.4	0.80±0.05	7.5±0.5	3.1 ~ 5.1	17.5
SFV10S561K	20	14.5	15	6.7	0.80±0.05	7.5±0.5	3.4 ~ 5.4	17.5
SFV10S621K	20	14.5	15	7.1	0.80±0.05	7.5±0.5	3.8 ~ 5.8	17.5
SFV10S681K	20	14.5	15	7.4	0.80±0.05	7.5±0.5	4.2 ~ 6.2	17.5
SFV10S751K	20	14.5	15	7.9	0.80±0.05	7.5±0.5	4.6 ~ 6.6	17.5
SFV10S821K	20	14.5	15	8.3	0.80±0.05	7.5±0.5	5.1 ~ 7.1	17.5

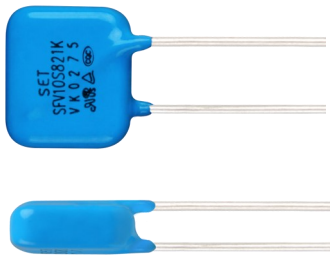

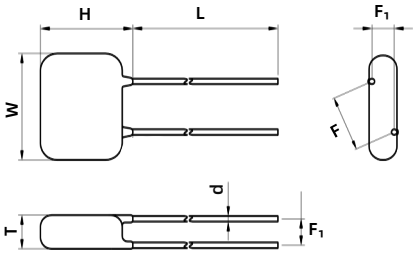

Straight Lead (A)

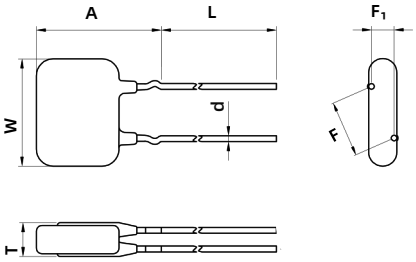

Outward Crimp (C)

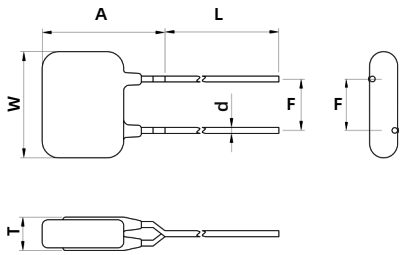

Inline Crimp (D)

Note:
The above data is for reference only.

All Rights Reserved by Xiamen SET Electronics Co., Ltd. 2024-2026 V1.1

Specification

Model	Max. Continuous Operating Voltage		Varistor Voltage @1 mA DC		Clamping Voltage (Max.)		Max. Discharge Current (8/20 μs)		Max. Energy (10/1000 μs)	Typical Capacitance (For reference only) @1 kHz	Agency Information			
	VAC	VDC	Min.	Max.	V_C	I_P	I_n	I_{max}	(J)	(pF)	UL	cUL	TUV	CQC
	(V)	(V)	(V)	(V)	(V)	(A)	(kA)	(kA)						
SFV10S220K	14	18	20	24	43	10	1	2	8	9100	●	●	●	○
SFV10S270K	17	22	24	31	53	10	1	2	10	7400	●	●	●	○
SFV10S330K	20	26	30	36	65	10	1	2	12	6100	●	●	●	○
SFV10S390K	25	31	35	43	77	10	1	2	13	5100	●	●	●	○
SFV10S470K	30	38	42	52	93	10	1	2	17	4300	●	●	●	○
SFV10S560K	35	45	50	62	110	10	1	2	20	3600	●	●	●	○
SFV10S680K	40	56	61	75	135	10	1	2	24	2900	●	●	●	○
SFV10S820K	50	65	74	90	135	50	1.5	3	27	2400	●	●	●	●
SFV10S101K	60	85	90	110	165	50	1.5	3	33	2000	●	●	●	●
SFV10S121K	75	100	108	132	200	50	1.5	3	40	1700	●	●	●	●
SFV10S151K	95	125	135	165	250	50	2.5	5	53	1300	●	●	●	●
SFV10S181K	115	150	162	198	300	50	2.5	5	60	1100	●	●	●	●
SFV10S201K	130	170	180	220	340	50	2.5	5	70	1000	●	●	●	●
SFV10S221K	140	180	198	242	360	50	2.5	5	78	900	●	●	●	●
SFV10S241K	150	200	216	264	395	50	2.5	5	84	830	●	●	●	●
SFV10S271K	175	225	243	297	455	50	2.5	5	99	740	●	●	●	●
SFV10S301K	190	250	270	330	500	50	2.5	5	108	670	●	●	●	●
SFV10S331K	210	275	297	363	550	50	2.5	5	115	610	●	●	●	●
SFV10S361K	230	300	324	396	595	50	2.5	5	130	560	●	●	●	●
SFV10S391K	250	320	351	429	650	50	2.5	5	140	510	●	●	●	●
SFV10S431K	275	350	387	473	710	50	2.5	5	155	460	●	●	●	●
SFV10S471K	300	385	423	517	775	50	2.5	5	175	430	●	●	●	●
SFV10S511K	320	415	459	561	845	50	2.5	5	180	390	●	●	●	●
SFV10S561K	350	460	504	616	925	50	2.5	5	185	360	●	●	●	●
SFV10S621K	385	505	558	682	1025	50	2.5	5	190	320	●	●	●	●
SFV10S681K	420	560	612	748	1120	50	2.5	5	200	290	●	●	●	●
SFV10S751K	460	615	675	825	1240	50	2.5	5	210	270	●	●	●	○
SFV10S821K	510	670	738	902	1355	50	2.5	5	220	260	●	●	●	○

●: Approved ○: Unauthorized ● RoHS & REACH Compliant

All Rights Reserved by Xiamen SET Electronics Co., Ltd. 2024-2026 V1.1

Performance Curve (For reference only)

- Max. Peak Current Derating Curves

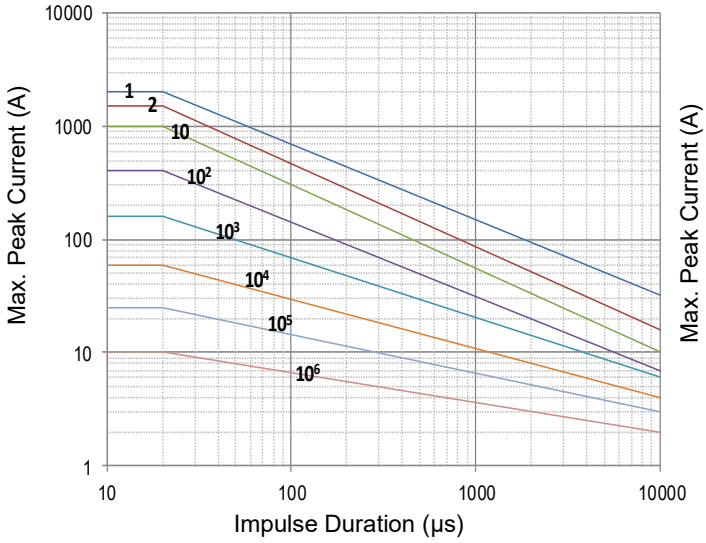

SFV10S220K to SFV10S680K

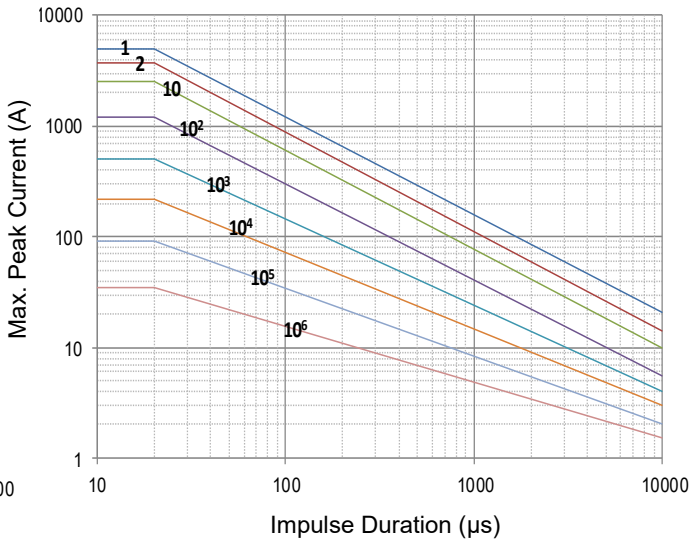

SFV10S820K to SFV10S821K

Note: 1, 2, 10, 10^2, 10^3, 10^4, 10^5, 10^6 Stand for Repetitions.

- Voltage-Current Characteristic Curves

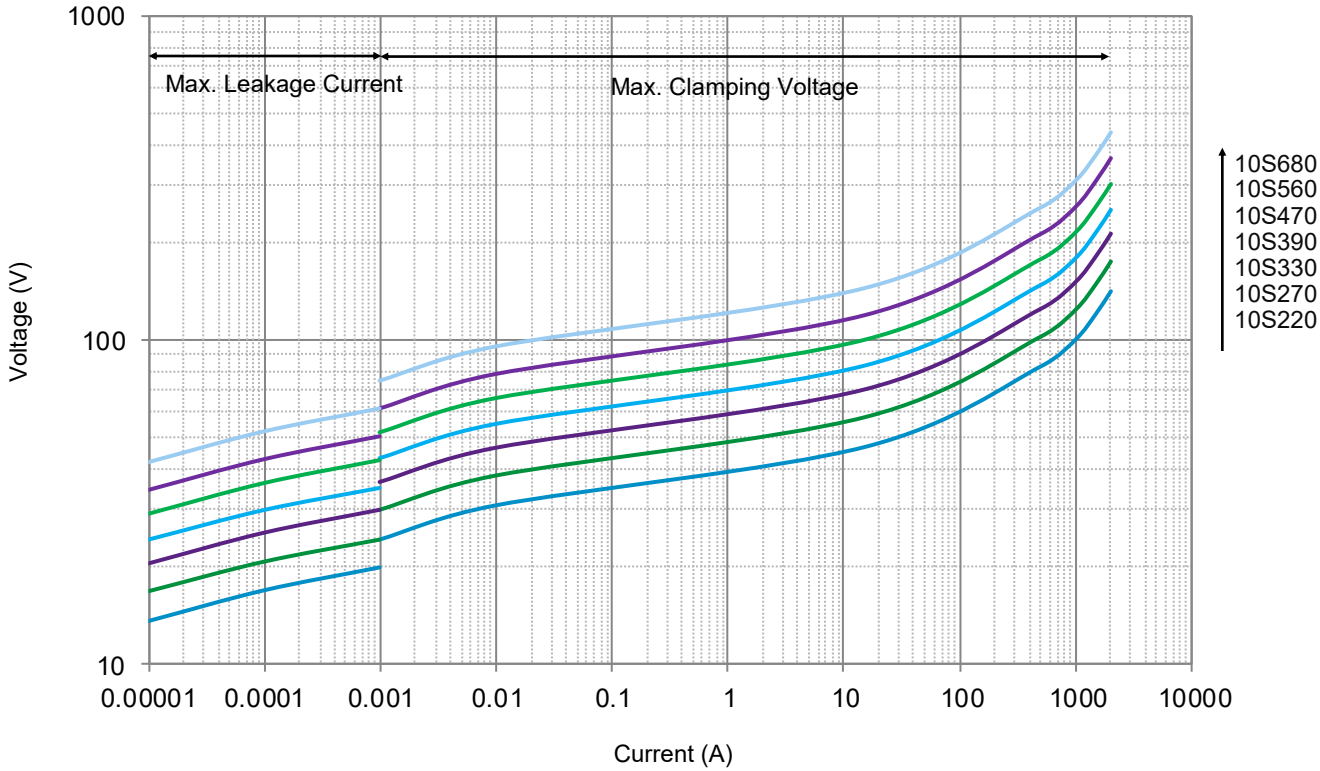

All Rights Reserved by Xiamen SET Electronics Co., Ltd. 2024-2026 V1.1

- Voltage-Current Characteristic Curves

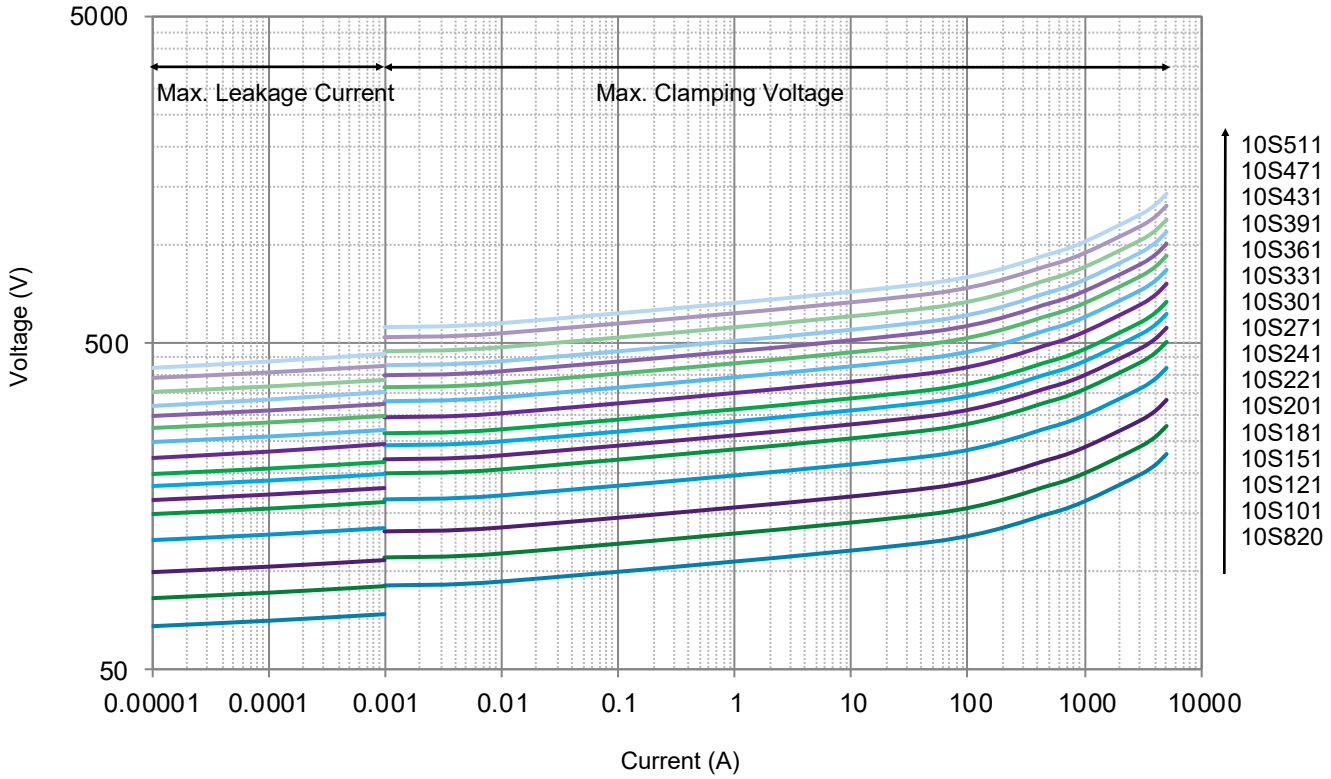

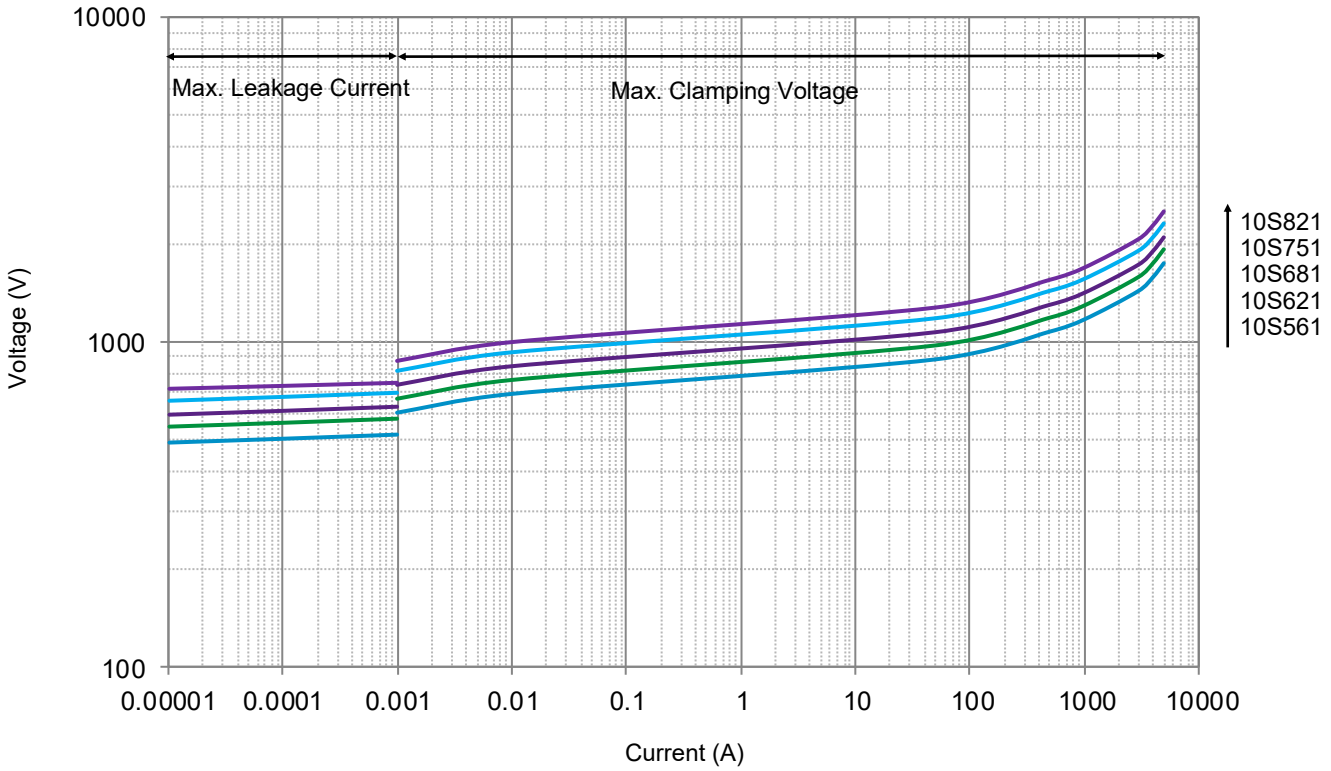

All Rights Reserved by Xiamen SET Electronics Co., Ltd. 2024-2026 V1.1

Packaging Information

- Bulk Packaging (Code: BUL)
- Bulk Packaging Quantity & Weight.

Series	Nominal Varistor Voltage	PE Bag	Box	Carton	G. W / Carton (365 × 265 × 245)
	(V)	(PCS)	(PCS)	(PCS)	(kg)±10%
SFV10S Series	220 ~ 621	400	800	4800	5 ~ 15
	681 ~ 821	300	600	3600	12 ~ 15

Note:
Other lead length packaging information, please contact SETsafe | SETfuse.

All Dimensions in mm

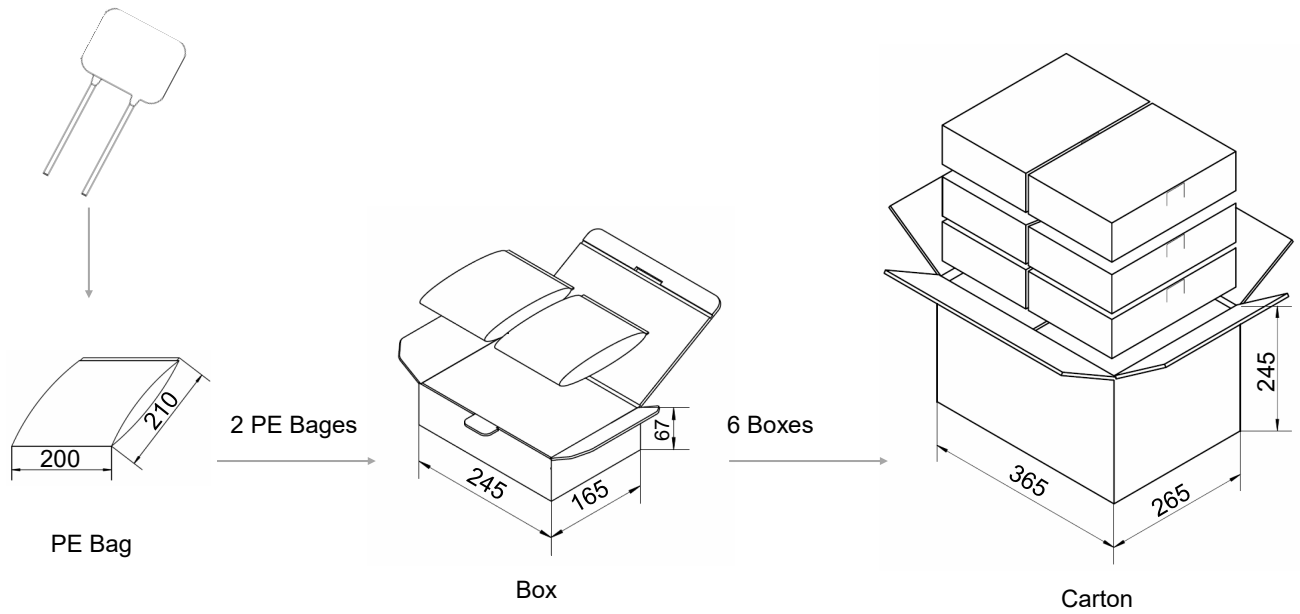

All Rights Reserved by Xiamen SET Electronics Co., Ltd. 2024-2026 V1.1

Dimensions (mm)

Model	L (Min.)	W (Max.)	H (Max.)	T (Max.)	d	F	F_1	A (Max.)
SFV15S220K	20	17	20	4.9	1.00±0.05	10.0±0.6	1.2 ~ 2.7	22.5
SFV15S270K	20	17	20	5.2	1.00±0.05	10.0±0.6	1.3 ~ 2.9	22.5
SFV15S330K	20	17	20	5.5	1.00±0.05	10.0±0.6	1.4 ~ 3.1	22.5
SFV15S390K	20	17	20	5.8	1.00±0.05	10.0±0.6	1.5 ~ 3.3	22.5
SFV15S470K	20	17	20	5.0	1.00±0.05	10.0±0.6	1.3 ~ 2.9	22.5
SFV15S560K	20	17	20	5.2	1.00±0.05	10.0±0.6	1.4 ~ 3.1	22.5
SFV15S680K	20	17	20	5.5	1.00±0.05	10.0±0.6	1.5 ~ 3.4	22.5
SFV15S820K	20	17	20	4.8	1.00±0.05	10.0±0.6	1.3 ~ 2.8	22.5
SFV15S101K	20	17	20	5.0	1.00±0.05	10.0±0.6	1.4 ~ 3.0	22.5
SFV15S121K	20	17	20	5.2	1.00±0.05	10.0±0.6	1.5 ~ 3.2	22.5
SFV15S151K	20	17	20	5.5	1.00±0.05	10.0±0.6	1.6 ~3.5	22.5
SFV15S181K	20	17	20	4.9	1.00±0.05	10.0±0.6	1.2 ~ 3.2	22.5
SFV15S201K	20	17	20	5.0	1.00±0.05	10.0±0.6	1.3 ~ 3.3	22.5
SFV15S221K	20	17	20	5.1	1.00±0.05	10.0±0.6	1.4 ~ 3.4	22.5
SFV15S241K	20	17	20	5.2	1.00±0.05	10.0±0.6	1.5 ~ 3.5	22.5
SFV15S271K	20	17	20	5.4	1.00±0.05	10.0±0.6	1.7 ~ 3.7	22.5
SFV15S301K	20	17	20	5.6	1.00±0.05	10.0±0.6	1.9 ~ 3.9	22.5
SFV15S331K	20	17	20	5.8	1.00±0.05	10.0±0.6	2.1 ~ 4.1	22.5
SFV15S361K	20	17	20	6.0	1.00±0.05	10.0±0.6	2.3 ~ 4.3	22.5
SFV15S391K	20	17	20	6.1	1.00±0.05	10.0±0.6	2.6 ~ 4.6	22.5
SFV15S431K	20	17	20	6.4	1.00±0.05	10.0±0.6	2.8 ~ 4.8	22.5
SFV15S471K	20	17	20	6.6	1.00±0.05	10.0±0.6	3.0 ~ 5.0	22.5
SFV15S511K	20	17	20	6.8	1.00±0.05	10.0±0.6	3.3 ~ 5.3	22.5
SFV15S561K	20	17	20	7.1	1.00±0.05	10.0±0.6	3.6 ~ 5.6	22.5
SFV15S621K	20	17	20	7.5	1.00±0.05	10.0±0.6	4.0 ~ 6.0	22.5
SFV15S681K	20	17	20	7.8	1.00±0.05	10.0±0.6	4.4 ~ 6.4	22.5
SFV15S751K	20	17	20	8.3	1.00±0.05	10.0±0.6	4.8 ~ 6.8	22.5
SFV15S821K	20	17	20	8.7	1.00±0.05	10.0±0.6	5.3 ~ 7.3	22.5

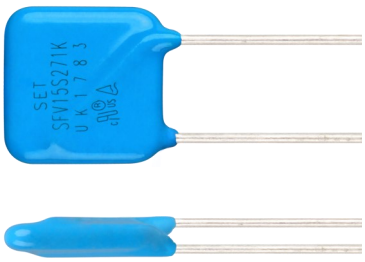

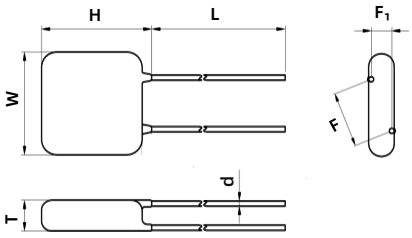

Straight Lead (A)

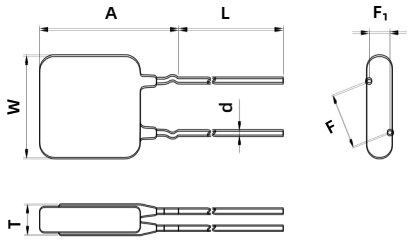

Outward Crimp (C)

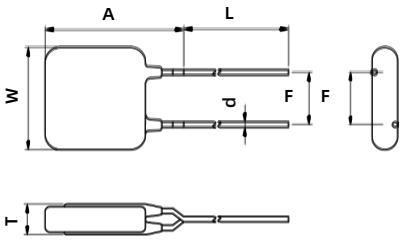

Inline Crimp (D)

Note:
The above data is for reference only.

All Rights Reserved by Xiamen SET Electronics Co., Ltd. 2024-2026 V1.1

Specification

Model	Max. Continuous Operating Voltage		Varistor Voltage @1 mA DC		Clamping Voltage (Max.)		Max. Discharge Current (8/20 μs)		Max. Energy (10/1000 μs)	Typical Capacitance (For reference only) @1 kHz	Agency Information			
	VAC	VDC	Min.	Max.	V_C	I_P	I_n	I_{max}	(J)	(pF)	UL	cUL	TUV	CQC
	(V)	(V)	(V)	(V)	(V)	(A)	(kA)	(kA)						
SFV15S220K	14	18	20	24	43	10	1.5	3	13	15000	●	●	●	○
SFV15S270K	17	22	24	31	53	15	1.5	3	16	10500	●	●	●	○
SFV15S330K	20	26	30	36	65	15	1.5	3	19	9300	●	●	●	○
SFV15S390K	25	31	35	43	77	15	1.5	3	21	7000	●	●	●	○
SFV15S470K	30	38	42	52	93	15	1.5	3	27	6000	●	●	●	○
SFV15S560K	35	45	50	62	110	15	1.5	3	32	5300	●	●	●	○
SFV15S680K	40	56	61	75	135	15	1.5	3	41	4700	●	●	●	○
SFV15S820K	50	65	74	90	135	75	5	10	43	4000	●	●	●	○
SFV15S101K	60	85	90	110	165	75	5	10	53	3200	●	●	●	○
SFV15S121K	75	100	108	132	200	75	5	10	64	2700	●	●	●	○
SFV15S151K	95	125	135	165	250	75	5	10	85	2200	●	●	●	○
SFV15S181K	115	150	162	198	300	75	5	10	96	1800	●	●	●	○
SFV15S201K	130	170	180	220	340	75	5	10	102	1600	●	●	●	○
SFV15S221K	140	180	198	242	360	75	5	10	125	1450	●	●	●	○
SFV15S241K	150	200	216	264	395	75	5	10	134	1350	●	●	●	○
SFV15S271K	175	225	243	297	455	75	5	10	158	1200	●	●	●	○
SFV15S301K	190	250	270	330	500	75	5	10	173	1050	●	●	●	○
SFV15S331K	210	275	297	363	550	75	5	10	185	1000	●	●	●	○
SFV15S361K	230	300	324	396	595	75	5	10	208	900	●	●	●	○
SFV15S391K	250	320	351	429	650	75	5	10	224	800	●	●	●	○
SFV15S431K	275	350	387	473	710	75	5	10	248	750	●	●	●	○
SFV15S471K	300	385	423	517	775	75	5	10	280	680	●	●	●	○
SFV15S511K	320	415	459	561	845	75	5	10	300	630	●	●	●	○
SFV15S561K	350	460	504	616	925	75	5	10	310	580	●	●	●	○
SFV15S621K	385	505	558	682	1025	75	5	10	310	530	●	●	●	○
SFV15S681K	420	560	612	748	1120	75	5	10	320	500	●	●	●	○
SFV15S751K	460	615	675	825	1240	75	5	10	335	430	●	●	●	○
SFV15S821K	510	670	738	902	1355	75	5	10	350	400	●	●	●	○

●: Approved ○: Unauthorized ● RoHS & REACH Compliant

All Rights Reserved by Xiamen SET Electronics Co., Ltd. 2024-2026 V1.1

Performance Curve (For reference only)

- Max. Peak Current Derating Curves

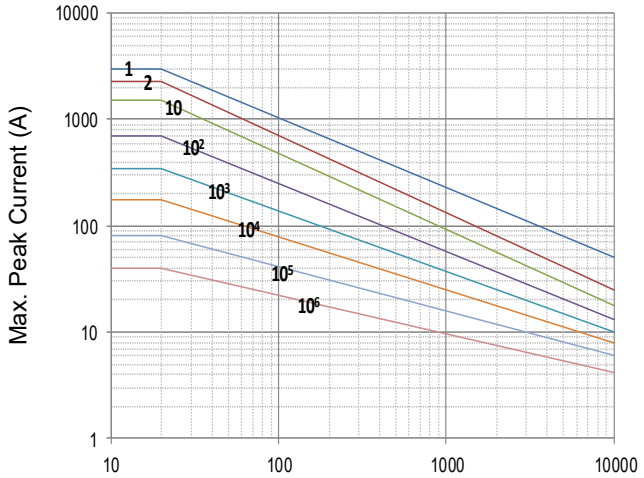

Impulse Duration (μs)

SFV15S220K to SFV15S680K

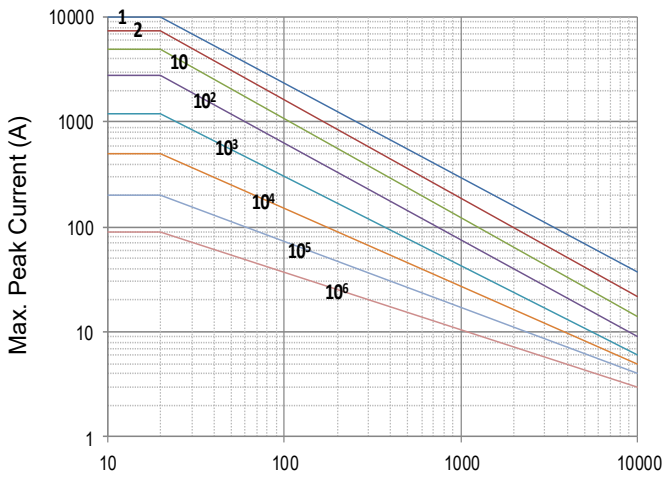

Impulse Duration (μs)

SFV15S820K to SFV15S821K

Note: 1, 2, 10, 10^2, 10^3, 10^4, 10^5, 10^6 Stand for Repetitions.

- Voltage-Current Characteristic Curves

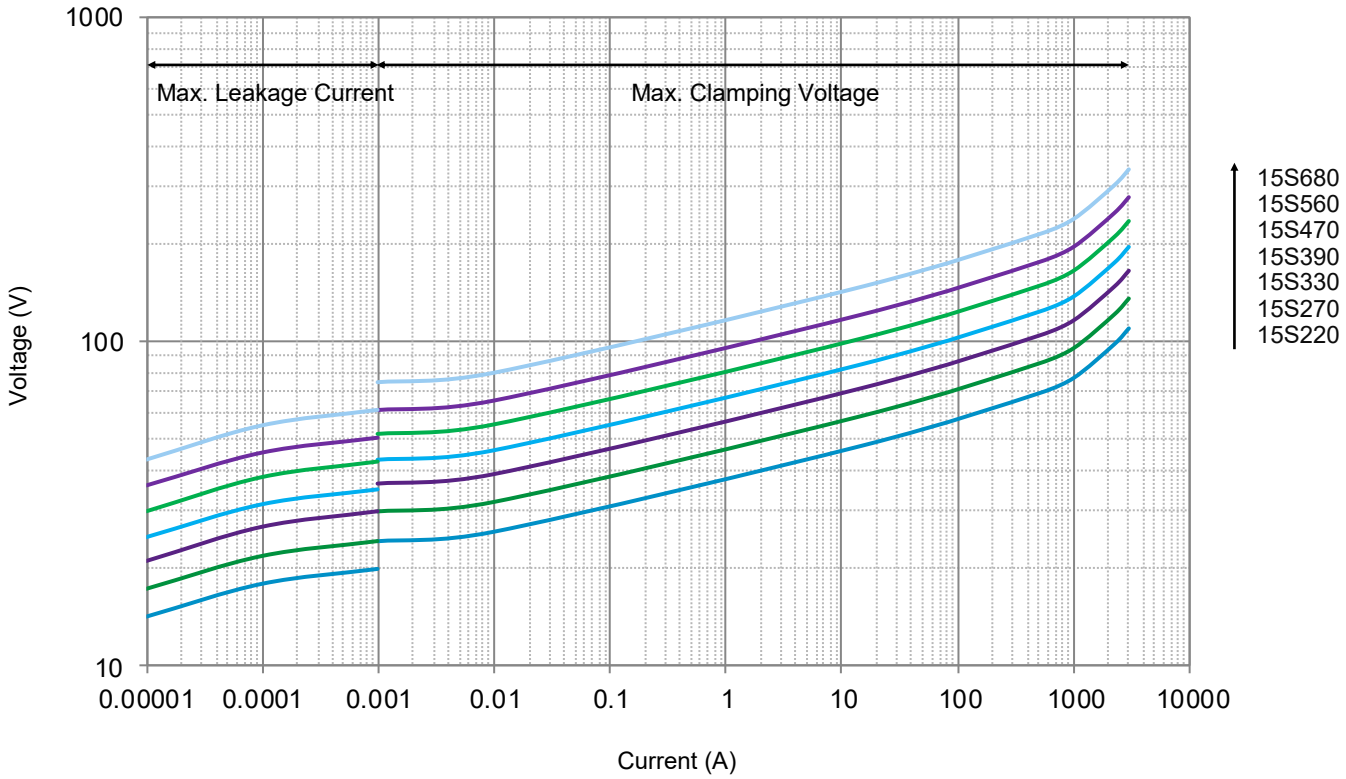

All Rights Reserved by Xiamen SET Electronics Co., Ltd. 2024-2026 V1.1

- Voltage-Current Characteristic Curves

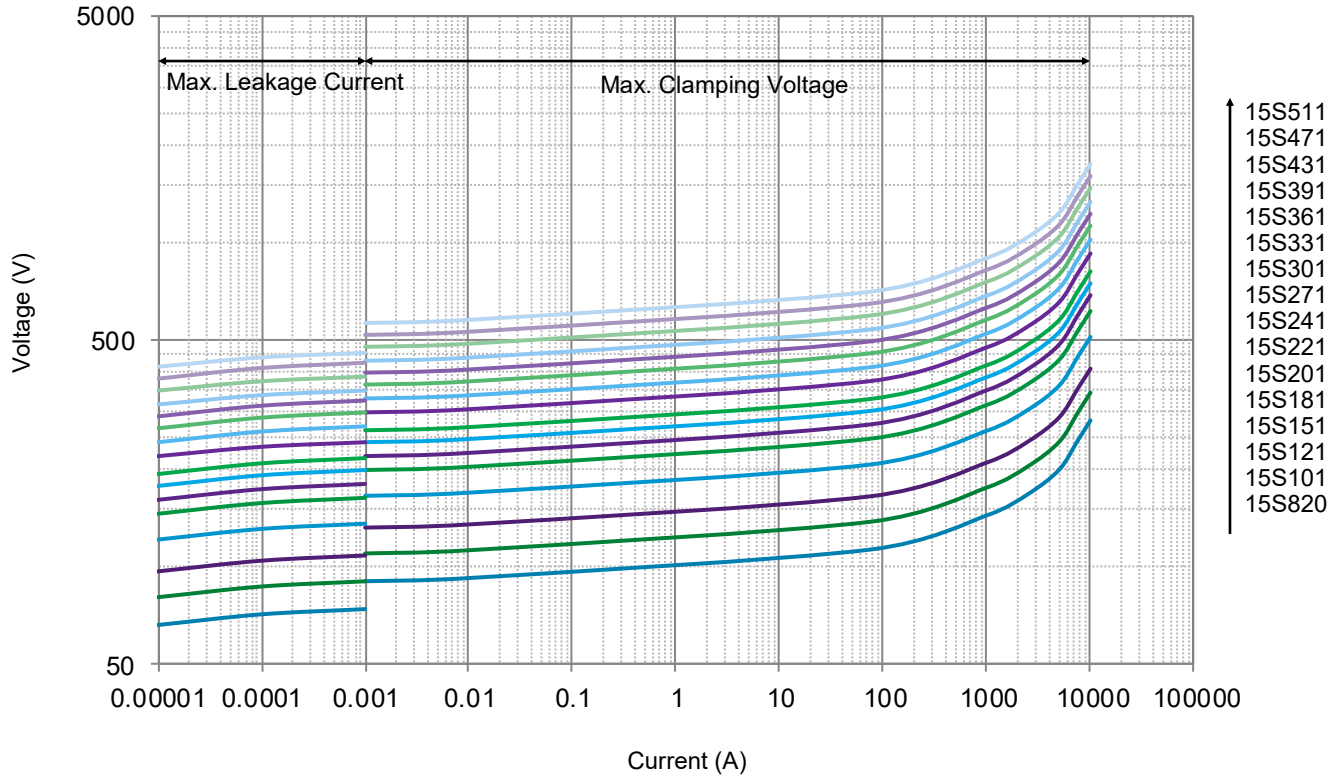

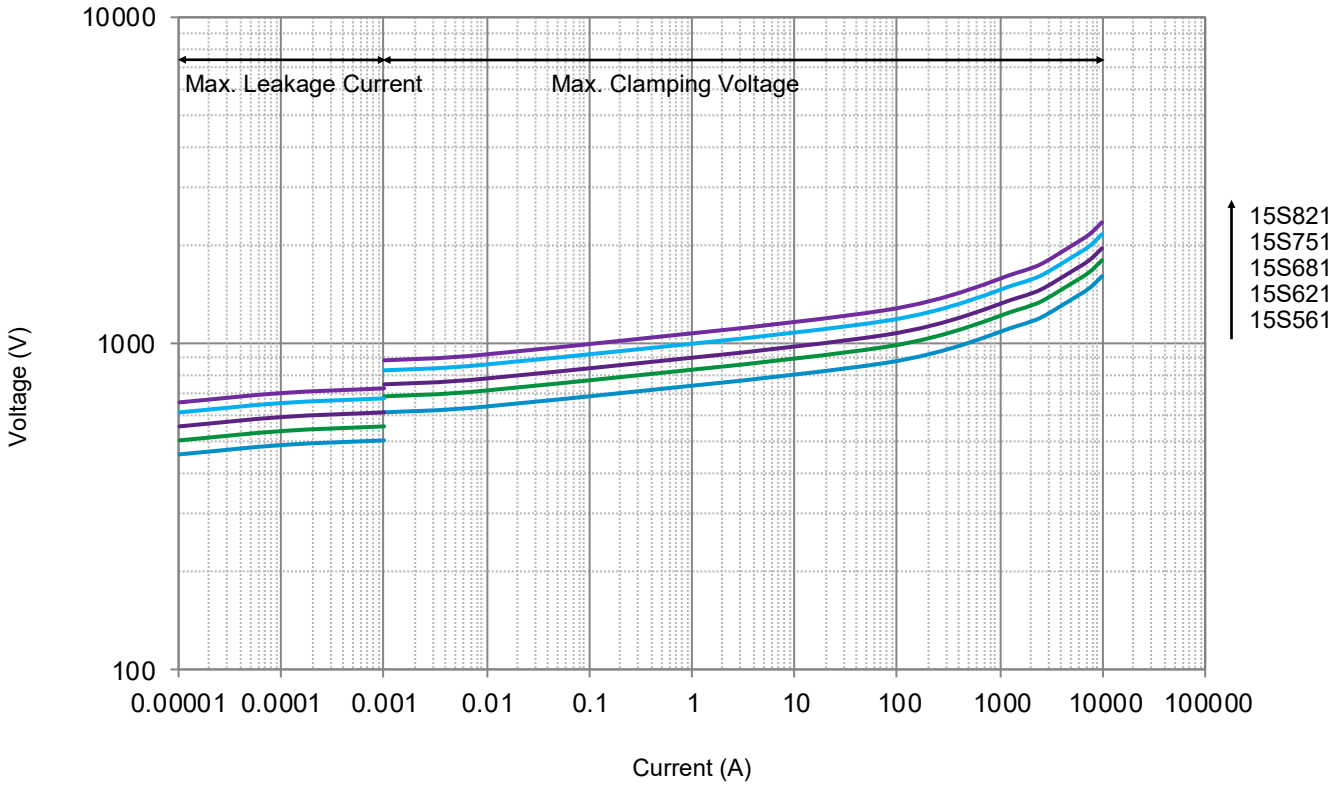

All Rights Reserved by Xiamen SET Electronics Co., Ltd. 2024-2026 V1.1

Packaging Information

- Bulk Packaging (Code: BUL)
- Bulk Packaging Quantity & Weight.

Series	Nominal Varistor Voltage	PE Bag	Box	Carton	G. W / Carton (365 × 265 × 245)
SFV15S Series	(V)	(PCS)	(PCS)	(PCS)	(kg)±10%
	180 ~ 361	200	400	2400	4 ~ 7
	391 ~ 751	150	300	1800	5 ~ 8
	821	100	200	1200	9

Note:
Other lead length packaging information, please contact SETsafe | SETfuse.

All Dimensions in mm

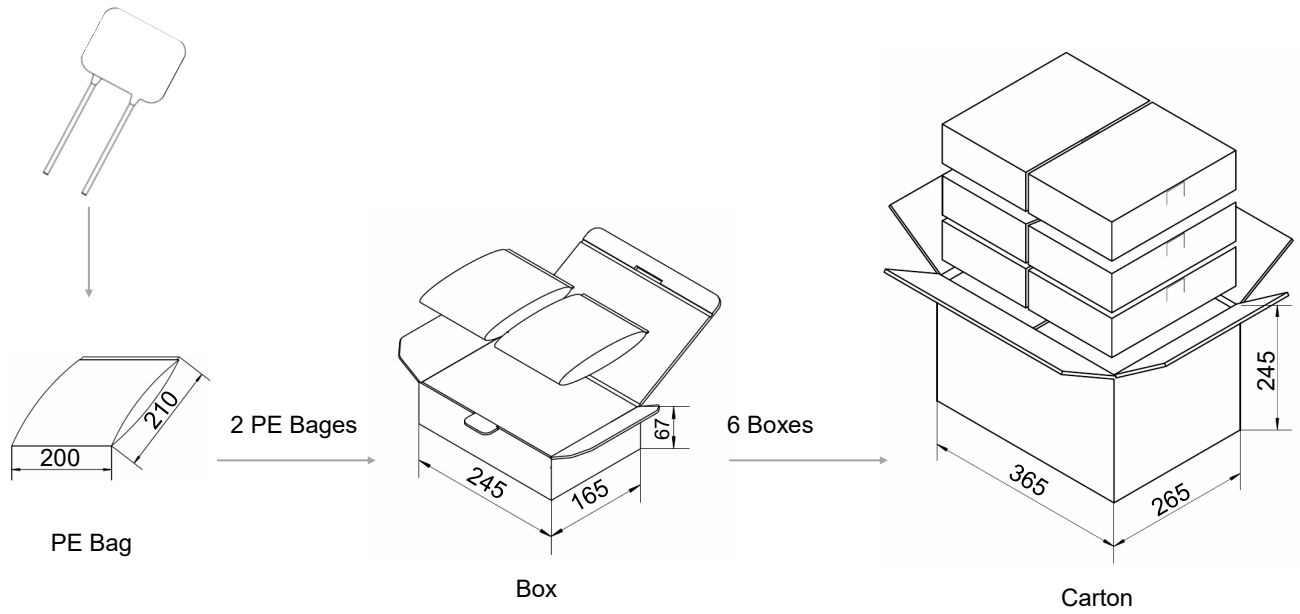

All Rights Reserved by Xiamen SET Electronics Co., Ltd. 2024-2026 V1.1

Dimensions (mm)

Model	L (Min.)	W (Max.)	H (Max.)	T (Max.)	d	F	F_1	A (Max.)
SFV20S220K	20	22	26	5.0	1.00±0.05	10.0±0.5	1.2 ~ 2.8	27.5
SFV20S270K	20	22	26	5.3	1.00±0.05	10.0±0.5	1.3 ~ 3.0	27.5
SFV20S330K	20	22	26	5.6	1.00±0.05	10.0±0.5	1.4 ~ 3.2	27.5
SFV20S390K	20	22	26	5.9	1.00±0.05	10.0±0.5	1.5 ~ 3.4	27.5
SFV20S470K	20	22	26	5.1	1.00±0.05	10.0±0.5	1.3 ~ 3.0	27.5
SFV20S560K	20	22	26	5.3	1.00±0.05	10.0±0.5	1.4 ~ 3.2	27.5
SFV20S680K	20	22	26	5.6	1.00±0.05	10.0±0.5	1.5 ~ 3.4	27.5
SFV20S820K	20	22	26	4.9	1.00±0.05	10.0±0.5	1.3 ~ 2.9	27.5
SFV20S101K	20	22	26	5.1	1.00±0.05	10.0±0.5	1.4 ~ 3.1	27.5
SFV20S121K	20	22	26	5.3	1.00±0.05	10.0±0.5	1.5 ~ 3.3	27.5
SFV20S151K	20	22	26	5.6	1.00±0.05	10.0±0.5	1.6 ~ 3.6	27.5
SFV20S181K	20	22	26	5.1	1.00±0.05	10.0±0.5	1.4 ~ 3.1	27.5
SFV20S201K	20	22	26	5.2	1.00±0.05	10.0±0.5	1.5 ~ 3.2	27.5
SFV20S221K	20	22	26	5.3	1.00±0.05	10.0±0.5	1.6 ~ 3.6	27.5
SFV20S241K	20	22	26	5.4	1.00±0.05	10.0±0.5	1.7 ~ 3.5	27.5
SFV20S271K	20	22	26	5.6	1.00±0.05	10.0±0.5	1.8 ~ 3.6	27.5
SFV20S301K	20	22	26	5.8	1.00±0.05	10.0±0.5	1.9 ~ 3.8	27.5
SFV20S331K	20	22	26	6.0	1.00±0.05	10.0±0.5	2.0 ~ 4.0	27.5
SFV20S361K	20	22	26	6.2	1.00±0.05	10.0±0.5	2.2 ~ 4.2	27.5
SFV20S391K	20	22	26	6.4	1.00±0.05	10.0±0.5	2.3 ~ 4.3	27.5
SFV20S431K	20	22	26	6.6	1.00±0.05	10.0±0.5	2.6 ~ 4.6	27.5
SFV20S471K	20	22	26	6.9	1.00±0.05	10.0±0.5	2.8 ~ 4.8	27.5
SFV20S511K	20	22	26	7.1	1.00±0.05	10.0±0.5	3.1 ~ 5.1	27.5
SFV20S561K	20	22	26	7.4	1.00±0.05	10.0±0.5	3.3 ~ 5.3	27.5
SFV20S621K	20	22	26	7.8	1.00±0.05	10.0±0.5	3.7 ~ 5.7	27.5
SFV20S681K	20	22	26	8.2	1.00±0.05	10.0±0.5	4.1 ~ 6.1	27.5
SFV20S751K	20	22	26	8.6	1.00±0.05	10.0±0.5	4.5 ~ 6.5	27.5
SFV20S821K	20	22	26	9.1	1.00±0.05	10.0±0.5	4.9 ~ 6.9	27.5
SFV20S911K	20	22	26	9.6	1.00±0.05	10.0±0.5	5.4 ~ 7.4	27.5
SFV20S102K	20	22	26	10.2	1.00±0.05	10.0±0.5	5.9 ~ 7.9	27.5
SFV20S112K	20	22	26	10.8	1.00±0.05	10.0±0.5	6.5 ~ 8.5	27.5
SFV20S122K	20	22	26	11.4	1.00±0.05	10.0±0.5	7.1 ~ 9.1	27.5

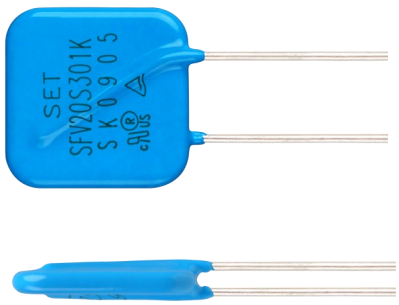

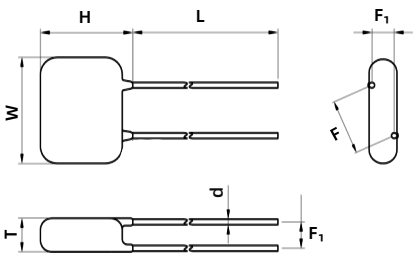

Straight Lead (A)

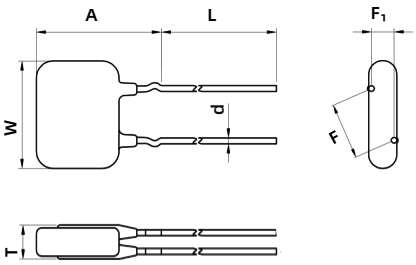

Outward Crimp (C)

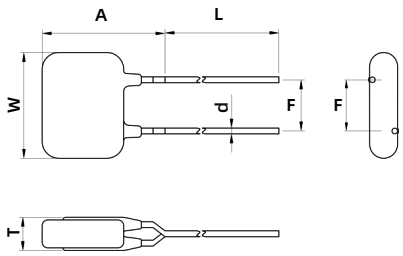

Inline Crimp (D)

Note:
The above data is for reference only.

All Rights Reserved by Xiamen SET Electronics Co., Ltd. 2024-2026 V1.1

Specification

Model	Max. Continuous Operating Voltage		Varistor Voltage @1 mA DC		Clamping Voltage (Max.)		Max. Discharge Current (8/20 μs)		Max. Energy (10/1000 μs)	Typical Capacitance (For reference only) @1 kHz	Agency Information			
	VAC	VDC	Min.	Max.	V_C	I_P	I_n	I_{max}	(J)	(pF)	UL	cUL	TUV	CQC
	(V)	(V)	(V)	(V)	(V)	(A)	(kA)	(kA)						
SFV20S220K	14	18	20	24	43	25	1.5	3	19.1	22200	●	●	○	○
SFV20S270K	17	22	24	31	53	25	1.5	3	23	15600	●	●	●	○
SFV20S330K	20	26	30	36	65	25	1.5	3	29	13800	●	●	●	○
SFV20S390K	25	31	35	43	77	25	1.5	3	33.5	10200	●	●	●	○
SFV20S470K	30	38	42	52	93	25	2.5	5	41	8880	●	●	●	○
SFV20S560K	35	45	50	62	110	25	2.5	5	49	7800	●	●	●	○
SFV20S680K	40	56	61	75	135	25	2.5	5	59	7000	●	●	●	○
SFV20S820K	50	65	74	90	135	125	8	15	67	5880	●	●	●	○
SFV20S101K	60	85	90	110	165	125	8	15	84	4800	●	●	●	○
SFV20S121K	75	100	108	132	200	125	8	15	102	4000	●	●	●	○
SFV20S151K	95	125	135	165	250	125	8	15	127	3200	●	●	●	○
SFV20S181K	115	150	162	198	300	125	8	15	156	2650	●	●	●	○
SFV20S201K	130	170	180	220	340	125	8	15	170	2400	●	●	●	○
SFV20S221K	140	180	198	242	360	125	8	15	185	2160	●	●	●	○
SFV20S241K	150	200	216	264	395	125	8	15	200	2000	●	●	●	○
SFV20S271K	175	225	243	297	455	125	8	15	230	1800	●	●	●	○
SFV20S301K	190	250	270	330	500	125	8	15	250	1560	●	●	●	○
SFV20S331K	210	275	297	363	550	125	8	15	270	1440	●	●	●	○
SFV20S361K	230	300	324	396	595	125	8	15	305	1320	●	●	●	○
SFV20S391K	250	320	351	429	650	125	8	15	330	1200	●	●	●	○
SFV20S431K	275	350	387	473	710	125	8	15	365	1160	●	●	●	○
SFV20S471K	300	385	423	517	775	125	8	15	420	1020	●	●	●	○
SFV20S511K	320	415	459	561	845	125	8	15	430	935	●	●	●	○
SFV20S561K	350	460	504	616	925	125	8	15	455	850	●	●	●	○
SFV20S621K	385	505	558	682	1025	125	8	15	465	780	●	●	●	○
SFV20S681K	420	560	612	748	1120	125	8	15	480	720	●	●	●	○
SFV20S751K	460	615	675	825	1240	125	8	15	500	635	●	●	●	○
SFV20S821K	510	670	738	902	1355	125	8	15	520	600	●	●	●	○
SFV20S911K	550	745	819	1001	1500	125	8	15	550	525	●	●	●	○
SFV20S102K	625	825	900	1100	1650	125	8	15	610	480	●	●	●	○
SFV20S112K	680	895	990	1210	1815	125	8	15	675	430	●	●	●	○
SFV20S122K	750	1000	1080	1320	1980	125	8	15	740	380	●	●	●	○

●: Approved ○: Unauthorized ● RoHS & REACH Compliant

All Rights Reserved by Xiamen SET Electronics Co., Ltd. 2024-2026 V1.1

Performance Curve (For reference only)

- Max. Peak Current Derating Curves

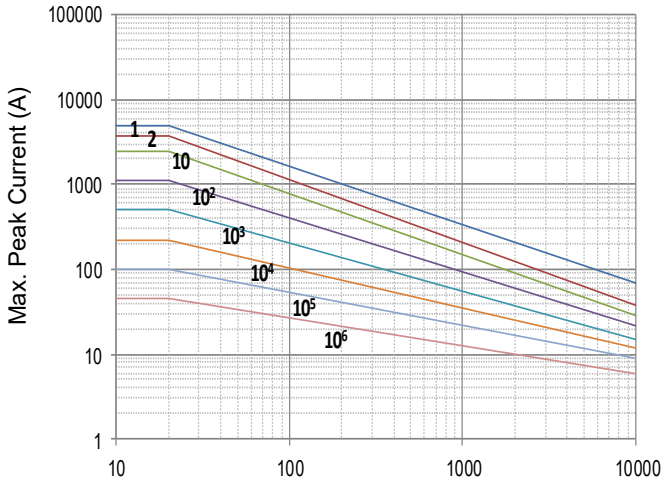

Impulse Duration (μs)

SFV20S220K to SFV20S680K

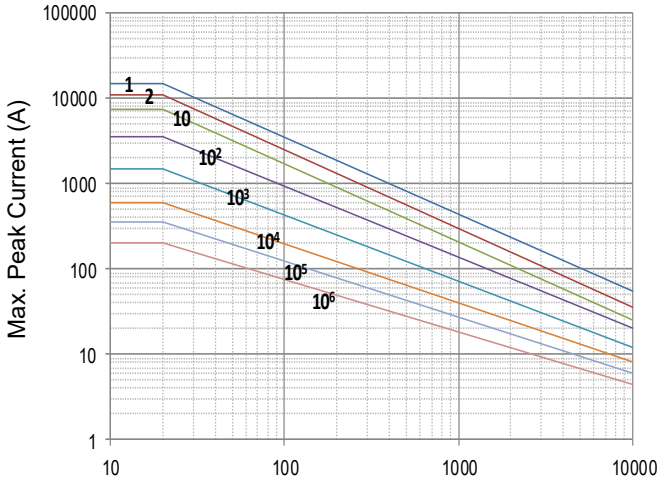

Impulse Duration (μs)

SFV20S820K to SFV20S122K

Note: 1, 2, 10, 10^2, 10^3, 10^4, 10^5, 10^6 Stand for Repetitions.

- Voltage-Current Characteristic Curves

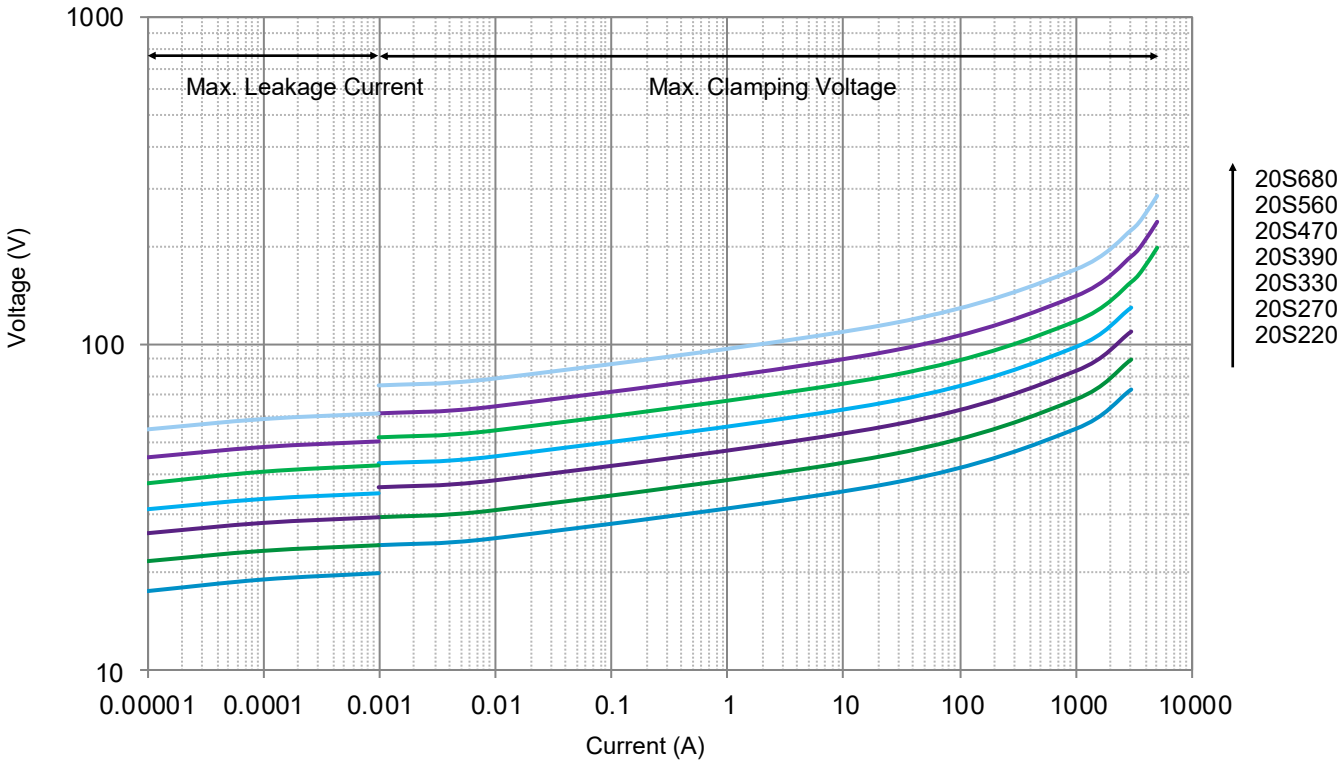

All Rights Reserved by Xiamen SET Electronics Co., Ltd. 2024-2026 V1.1

- Voltage-Current Characteristic Curves

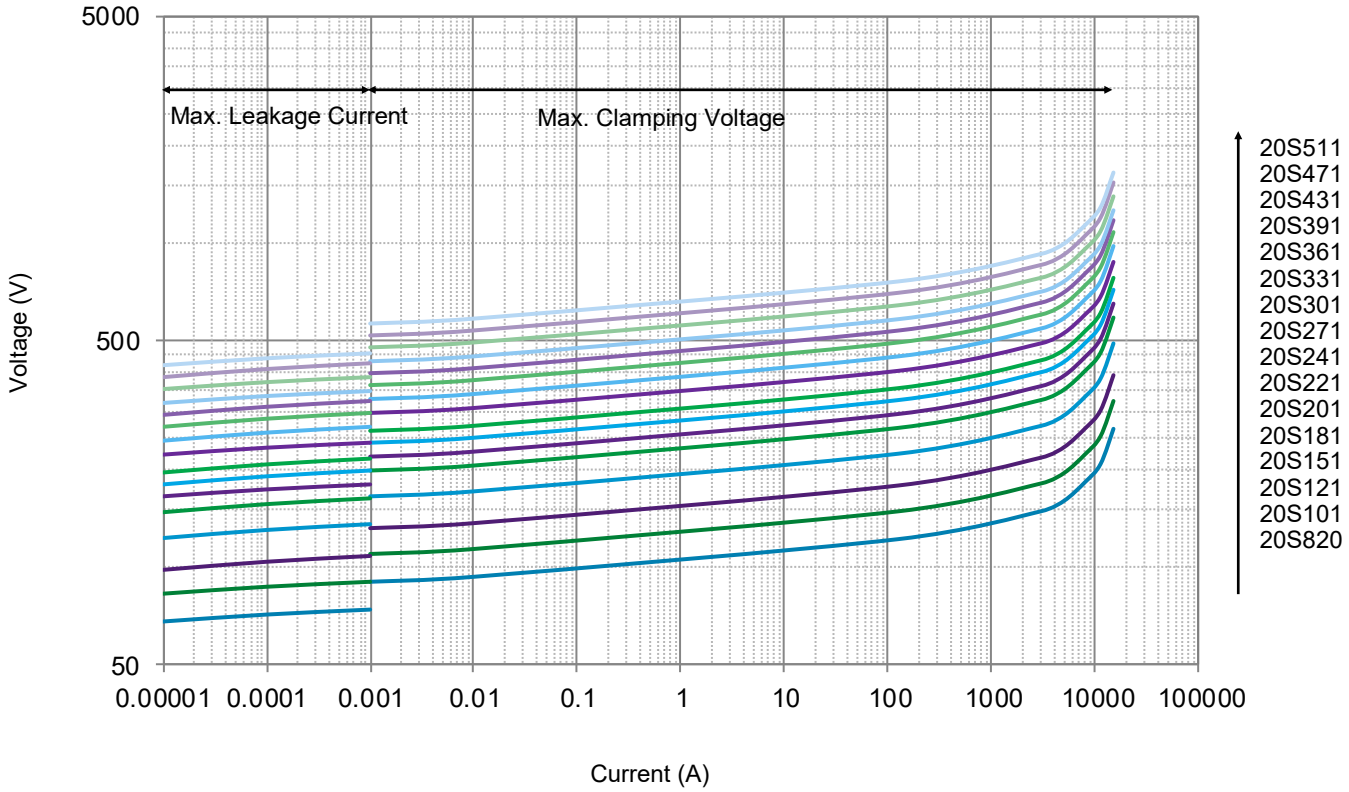

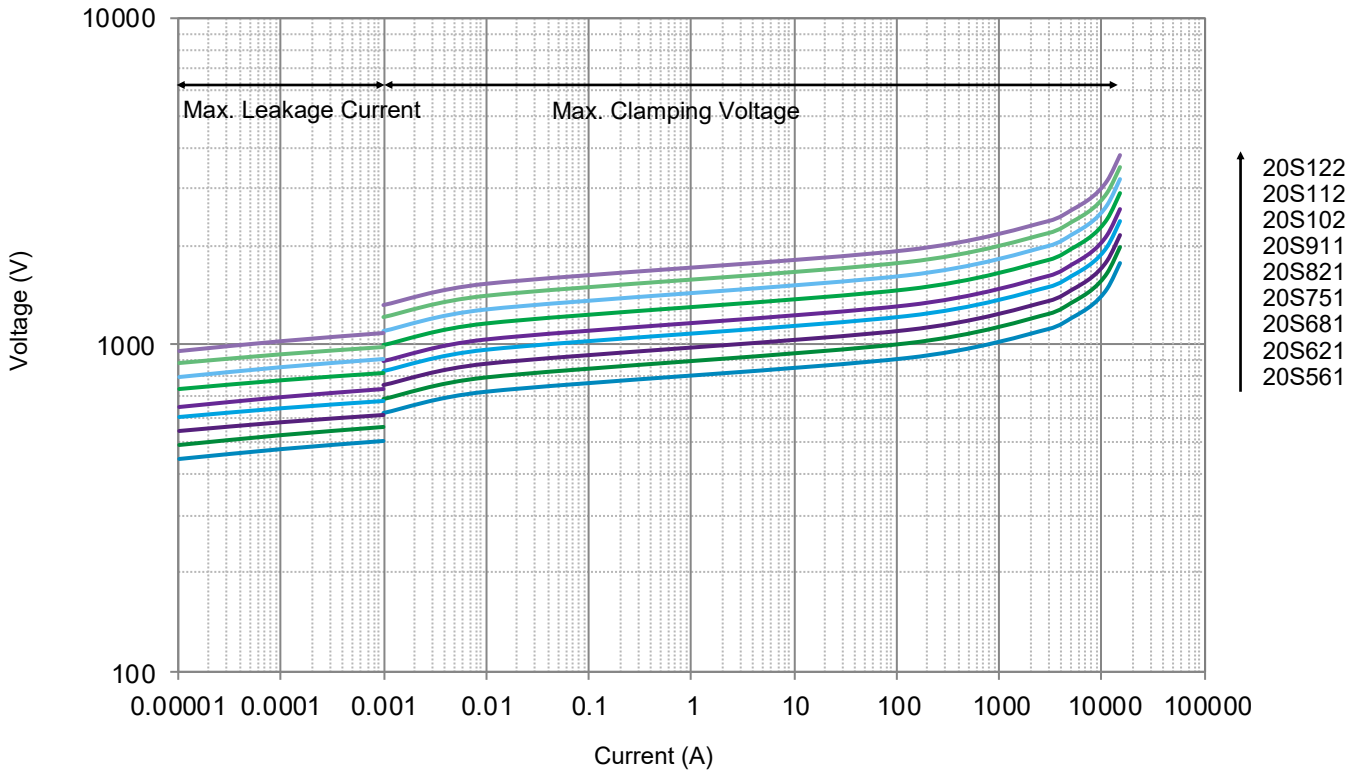

All Rights Reserved by Xiamen SET Electronics Co., Ltd. 2024-2026 V1.1

Packaging Information

- Bulk Packaging (Code: BUL)
- Bulk Packaging Quantity & Weight.

Series	Nominal Varistor Voltage	PE Bag	Box	Carton	G. W / Carton (365 × 265 × 245)
	(V)	(PCS)	(PCS)	(PCS)	(kg)±10%
SFV20S Series	220 ~ 391	100	200	1200	6 ~ 10
	431 ~ 122	80	160	960	9 ~ 20

Note:
Other lead length packaging information, please contact SETsafe | SETfuse.

All Dimensions in mm

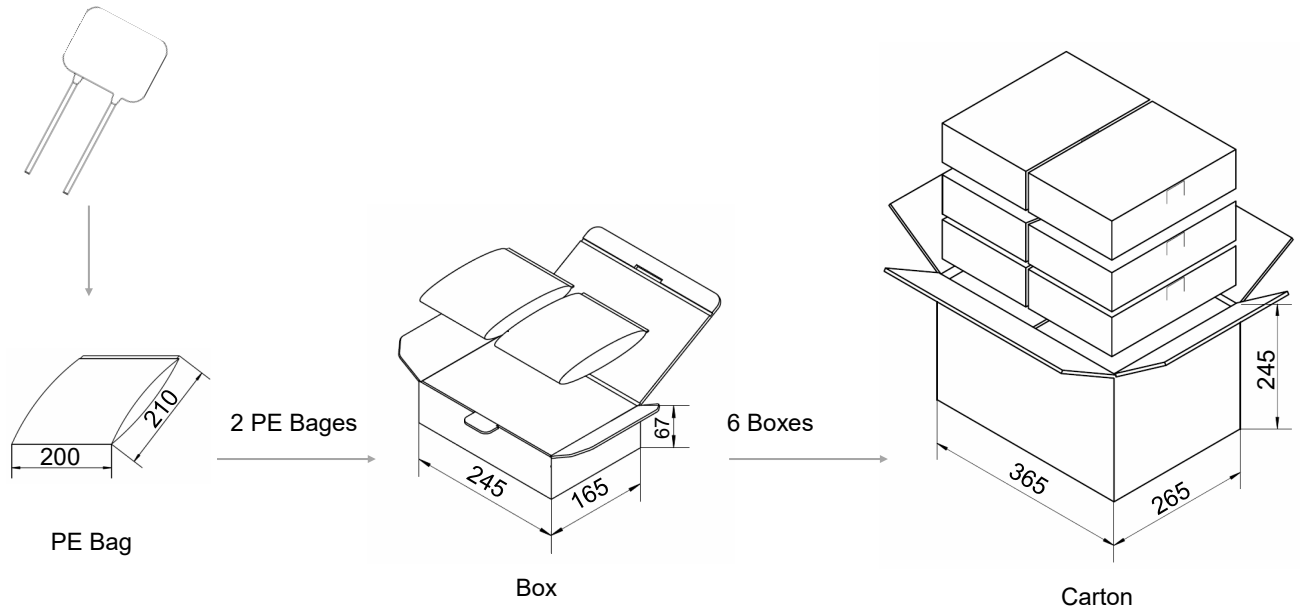

All Rights Reserved by Xiamen SET Electronics Co., Ltd. 2024-2026 V1.1

Dimensions (mm)

Straight Strap Lead

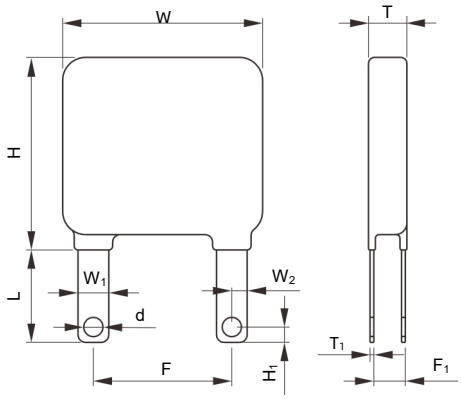

Model	L	W (Max.)	W_1	W_2	H (Max.)	H_1	T (Max.)	T_1	d	F	F_1
SFV25S220	12.0±3.0	28	4.00±0.05	2.00±0.05	30	2.00±0.05	4.2	0.50±0.05	2.50±0.05	18.0±1.0	0.8 ~ 2.2
SFV25S270	12.0±3.0	28	4.00±0.05	2.00±0.05	30	2.00±0.05	4.5	0.50±0.05	2.50±0.05	18.0±1.0	0.9 ~ 2.4
SFV25S330	12.0±3.0	28	4.00±0.05	2.00±0.05	30	2.00±0.05	4.8	0.50±0.05	2.50±0.05	18.0±1.0	1.0 ~ 2.6
SFV25S390	12.0±3.0	28	4.00±0.05	2.00±0.05	30	2.00±0.05	5.1	0.50±0.05	2.50±0.05	18.0±1.0	1.1 ~ 2.8
SFV25S470	12.0±3.0	28	4.00±0.05	2.00±0.05	30	2.00±0.05	4.3	0.50±0.05	2.50±0.05	18.0±1.0	0.9 ~ 2.4
SFV25S560	12.0±3.0	28	4.00±0.05	2.00±0.05	30	2.00±0.05	4.5	0.50±0.05	2.50±0.05	18.0±1.0	1.0 ~ 2.6
SFV25S680	12.0±3.0	28	4.00±0.05	2.00±0.05	30	2.00±0.05	4.8	0.50±0.05	2.50±0.05	18.0±1.0	1.2 ~ 2.9
SFV25S820	12.0±3.0	28	4.00±0.05	2.00±0.05	30	2.00±0.05	4.1	0.50±0.05	2.50±0.05	18.0±1.0	0.9 ~ 2.3
SFV25S101	12.0±3.0	28	4.00±0.05	2.00±0.05	30	2.00±0.05	4.3	0.50±0.05	2.50±0.05	18.0±1.0	1.0 ~ 2.5
SFV25S121	12.0±3.0	28	4.00±0.05	2.00±0.05	30	2.00±0.05	4.5	0.50±0.05	2.50±0.05	18.0±1.0	1.1 ~ 2.7
SFV25S151	12.0±3.0	28	4.00±0.05	2.00±0.05	30	2.00±0.05	4.8	0.50±0.05	2.50±0.05	18.0±1.0	1.4 ~ 3.0
SFV25S181	12.0±3.0	28	4.00±0.05	2.00±0.05	30	2.00±0.05	4.3	0.50±0.05	2.50±0.05	18.0±1.0	1.1 ~ 2.6
SFV25S201	12.0±3.0	28	4.00±0.05	2.00±0.05	30	2.00±0.05	4.4	0.50±0.05	2.50±0.05	18.0±1.0	1.2 ~ 2.7
SFV25S221	12.0±3.0	28	4.00±0.05	2.00±0.05	30	2.00±0.05	4.5	0.50±0.05	2.50±0.05	18.0±1.0	1.3 ~ 2.8
SFV25S241	12.0±3.0	28	4.00±0.05	2.00±0.05	30	2.00±0.05	4.6	0.50±0.05	2.50±0.05	18.0±1.0	1.4 ~ 2.9
SFV25S271	12.0±3.0	28	4.00±0.05	2.00±0.05	30	2.00±0.05	4.8	0.50±0.05	2.50±0.05	18.0±1.0	1.5 ~ 3.1
SFV25S301	12.0±3.0	28	4.00±0.05	2.00±0.05	30	2.00±0.05	5.0	0.50±0.05	2.50±0.05	18.0±1.0	1.6 ~ 3.3
SFV25S331	12.0±3.0	28	4.00±0.05	2.00±0.05	30	2.00±0.05	5.2	0.50±0.05	2.50±0.05	18.0±1.0	1.7 ~ 3.4
SFV25S361	12.0±3.0	28	4.00±0.05	2.00±0.05	30	2.00±0.05	5.4	0.50±0.05	2.50±0.05	18.0±1.0	1.8 ~ 3.6
SFV25S391	12.0±3.0	28	4.00±0.05	2.00±0.05	30	2.00±0.05	5.6	0.50±0.05	2.50±0.05	18.0±1.0	1.9 ~ 3.8
SFV25S431	12.0±3.0	28	4.00±0.05	2.00±0.05	30	2.00±0.05	5.8	0.50±0.05	2.50±0.05	18.0±1.0	2.0 ~ 4.0
SFV25S471	12.0±3.0	28	4.00±0.05	2.00±0.05	30	2.00±0.05	6.1	0.50±0.05	2.50±0.05	18.0±1.0	2.3 ~ 4.3
SFV25S511	12.0±3.0	28	4.00±0.05	2.00±0.05	30	2.00±0.05	6.3	0.50±0.05	2.50±0.05	18.0±1.0	2.5 ~ 4.5
SFV25S561	12.0±3.0	28	4.00±0.05	2.00±0.05	30	2.00±0.05	6.6	0.50±0.05	2.50±0.05	18.0±1.0	2.8 ~ 4.8
SFV25S621	12.0±3.0	28	4.00±0.05	2.00±0.05	30	2.00±0.05	7.0	0.50±0.05	2.50±0.05	18.0±1.0	3.1 ~ 5.1
SFV25S681	12.0±3.0	28	4.00±0.05	2.00±0.05	30	2.00±0.05	7.4	0.50±0.05	2.50±0.05	18.0±1.0	3.5 ~ 5.5
SFV25S751	12.0±3.0	28	4.00±0.05	2.00±0.05	30	2.00±0.05	7.8	0.50±0.05	2.50±0.05	18.0±1.0	3.9 ~ 5.9
SFV25S821	12.0±3.0	28	4.00±0.05	2.00±0.05	30	2.00±0.05	8.3	0.50±0.05	2.50±0.05	18.0±1.0	4.3 ~ 6.3
SFV25S911	12.0±3.0	28	4.00±0.05	2.00±0.05	30	2.00±0.05	8.8	0.50±0.05	2.50±0.05	18.0±1.0	4.9 ~ 6.9
SFV25S102	12.0±3.0	28	4.00±0.05	2.00±0.05	30	2.00±0.05	9.4	0.50±0.05	2.50±0.05	18.0±1.0	5.4 ~ 7.4
SFV25S112	12.0±3.0	28	4.00±0.05	2.00±0.05	30	2.00±0.05	10.0	0.50±0.05	2.50±0.05	18.0±1.0	6.0 ~ 8.0
SFV25S122	12.0±3.0	28	4.00±0.05	2.00±0.05	30	2.00±0.05	10.6	0.50±0.05	2.50±0.05	18.0±1.0	6.6 ~ 8.6

All Rights Reserved by Xiamen SET Electronics Co., Ltd. 2024-2026 V1.1

Dimensions (mm)

Model	L (Min.)	W (Max.)	H (Max.)	T (Max.)	d	F	F_1	A (Max.)
SFV25S220K	16.0±3	28	30	6.6	1.20±0.05	18.0±1.0	2.0 ~ 3.9	27.5
SFV25S270K	16.0±3	28	30	6.9	1.20±0.05	18.0±1.0	2.1 ~ 4.1	27.5
SFV25S330K	16.0±3	28	30	7.2	1.20±0.05	18.0±1.0	2.3 ~ 4.3	27.5
SFV25S390K	16.0±3	28	30	7.5	1.20±0.05	18.0±1.0	2.5 ~ 4.5	27.5
SFV25S470K	16.0±3	28	30	6.7	1.20±0.05	18.0±1.0	2.1 ~ 4.1	27.5
SFV25S560K	16.0±3	28	30	6.9	1.20±0.05	18.0±1.0	2.3 ~ 4.3	27.5
SFV25S680K	16.0±3	28	30	7.2	1.20±0.05	18.0±1.0	2.6 ~ 4.6	27.5
SFV25S820K	16.0±3	28	30	6.5	1.20±0.05	18.0±1.0	2.0 ~ 4.0	27.5
SFV25S101K	16.0±3	28	30	6.7	1.20±0.05	18.0±1.0	2.2 ~ 4.2	27.5
SFV25S121K	16.0±3	28	30	6.9	1.20±0.05	18.0±1.0	2.4 ~ 4.4	27.5
SFV25S151K	16.0±3	28	30	7.2	1.20±0.05	18.0±1.0	2.7 ~ 4.7	27.5
SFV25S181K	16.0±3	28	30	6.7	1.20±0.05	18.0±1.0	2.3 ~ 4.3	27.5
SFV25S201K	16.0±3	28	30	6.8	1.20±0.05	18.0±1.0	2.4 ~ 4.4	27.5
SFV25S221K	16.0±3	28	30	6.9	1.20±0.05	18.0±1.0	2.5 ~ 4.5	27.5
SFV25S241K	16.0±3	28	30	7.0	1.20±0.05	18.0±1.0	2.6 ~ 4.6	27.5
SFV25S271K	16.0±3	28	30	7.2	1.20±0.05	18.0±1.0	2.8 ~ 4.8	27.5
SFV25S301K	16.0±3	28	30	7.4	1.20±0.05	18.0±1.0	3.0 ~ 5.0	27.5
SFV25S331K	16.0±3	28	30	7.6	1.20±0.05	18.0±1.0	3.1 ~ 5.1	27.5
SFV25S361K	16.0±3	28	30	7.8	1.20±0.05	18.0±1.0	3.3 ~ 5.3	27.5
SFV25S391K	16.0±3	28	30	8.0	1.20±0.05	18.0±1.0	3.5 ~ 5.5	27.5
SFV25S431K	16.0±3	28	30	8.2	1.20±0.05	18.0±1.0	3.7 ~ 5.7	27.5
SFV25S471K	16.0±3	28	30	8.5	1.20±0.05	18.0±1.0	4.0 ~ 6.0	27.5
SFV25S511K	16.0±3	28	30	8.7	1.20±0.05	18.0±1.0	4.2 ~ 6.2	27.5
SFV25S561K	16.0±3	28	30	9.0	1.20±0.05	18.0±1.0	4.5 ~ 6.5	27.5
SFV25S621K	16.0±3	28	30	9.4	1.20±0.05	18.0±1.0	4.8 ~ 6.8	27.5
SFV25S681K	16.0±3	28	30	9.8	1.20±0.05	18.0±1.0	5.2 ~ 7.2	27.5
SFV25S751K	16.0±3	28	30	10.2	1.20±0.05	18.0±1.0	5.6 ~ 7.6	27.5
SFV25S821K	16.0±3	28	30	10.7	1.20±0.05	18.0±1.0	6.0 ~ 8.0	27.5
SFV25S911K	16.0±3	28	30	11.2	1.20±0.05	18.0±1.0	6.6 ~ 8.6	27.5
SFV25S102K	16.0±3	28	30	11.8	1.20±0.05	18.0±1.0	7.1 ~ 9.1	27.5
SFV25S112K	16.0±3	28	30	12.4	1.20±0.05	18.0±1.0	7.7 ~ 9.7	27.5
SFV25S122K	16.0±3	28	30	13.0	1.20±0.05	18.0±1.0	8.3 ~ 10.3	27.5

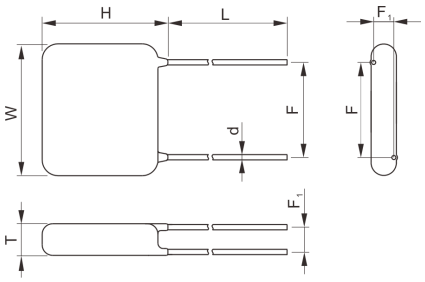

Straight Lead

Note:
The above data is for reference only.

All Rights Reserved by Xiamen SET Electronics Co., Ltd. 2024-2026 V1.1

Dimensions (mm)

Model	L (Min.)	W (Max.)	H (Max.)	T (Max.)	d	F	F_1	A (Max.)
SFV25S220K	20	28	30	6.6	1.20±0.05	18.0±0.	2.0 ~ 3.9	27.5
SFV25S270K	20	28	30	6.9	1.20±0.05	18.0±0.	2.1 ~ 4.1	27.5
SFV25S330K	20	28	30	7.2	1.20±0.05	18.0±0.	2.3 ~ 4.3	27.5
SFV25S390K	20	28	30	7.5	1.20±0.05	18.0±0.	2.5 ~ 4.5	27.5
SFV25S470K	20	28	30	6.7	1.20±0.05	18.0±0.	2.1 ~ 4.1	27.5
SFV25S560K	20	28	30	6.9	1.20±0.05	18.0±0.	2.3 ~ 4.3	27.5
SFV25S680K	20	28	30	7.2	1.20±0.05	18.0±0.	2.6 ~ 4.6	27.5
SFV25S820K	20	28	30	6.5	1.20±0.05	18.0±0.	2.0 ~ 4.0	27.5
SFV25S101K	20	28	30	6.7	1.20±0.05	18.0±0.	2.2 ~ 4.2	27.5
SFV25S121K	20	28	30	6.9	1.20±0.05	18.0±0.	2.4 ~ 4.4	27.5
SFV25S151K	20	28	30	7.2	1.20±0.05	18.0±0.	2.7 ~ 4.7	27.5
SFV25S181K	20	28	30	5.3	1.20±0.05	18.0±0.	1.4 ~ 3.2	27.5
SFV25S201K	20	28	30	5.4	1.20±0.05	18.0±0.	1.5 ~ 3.2	27.5
SFV25S221K	20	28	30	5.5	1.20±0.05	18.0±0.	1.6 ~ 3.4	27.5
SFV25S241K	20	28	30	5.7	1.20±0.05	18.0±0.	1.7 ~ 3.5	27.5
SFV25S271K	20	28	30	5.6	1.20±0.05	18.0±0.	1.8 ~ 3.6	27.5
SFV25S301K	20	28	30	5.7	1.20±0.05	18.0±0.	1.9 ~ 3.8	27.5
SFV25S331K	20	28	30	5.9	1.20±0.05	18.0±0.	2.0 ~ 4.0	27.5
SFV25S361K	20	28	30	6.0	1.20±0.05	18.0±0.	2.2 ~ 4.2	27.5
SFV25S391K	20	28	30	6.2	1.20±0.05	18.0±0.	2.3 ~ 4.3	27.5
SFV25S431K	20	28	30	6.4	1.20±0.05	18.0±0.	2.6 ~ 4.6	27.5
SFV25S471K	20	28	30	6.7	1.20±0.05	18.0±0.	2.8 ~ 4.8	27.5
SFV25S511K	20	28	30	6.8	1.20±0.05	18.0±0.	3.1 ~ 5.1	27.5
SFV25S561K	20	28	30	7.0	1.20±0.05	18.0±0.	3.3 ~ 5.3	27.5
SFV25S621K	20	28	30	7.3	1.20±0.05	18.0±0.	3.7 ~ 5.7	27.5
SFV25S681K	20	28	30	7.6	1.20±0.05	18.0±0.	4.1 ~ 6.1	27.5
SFV25S751K	20	28	30	8.0	1.20±0.05	18.0±0.	4.5 ~ 6.5	27.5
SFV25S821K	20	28	30	8.3	1.20±0.05	18.0±0.	4.9 ~ 6.9	27.5
SFV25S911K	20	28	30	8.8	1.20±0.05	18.0±0.	5.4 ~ 7.4	27.5
SFV25S102K	20	28	30	9.2	1.20±0.05	18.0±0.	5.9 ~ 7.9	27.5
SFV25S112K	20	28	30	9.7	1.20±0.05	18.0±0.	6.5 ~ 8.5	27.5
SFV25S122K	20	28	30	10.2	1.20±0.05	18.0±0.	7.1 ~ 9.1	27.5

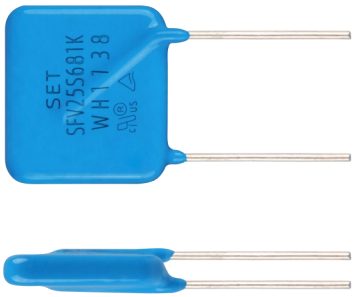

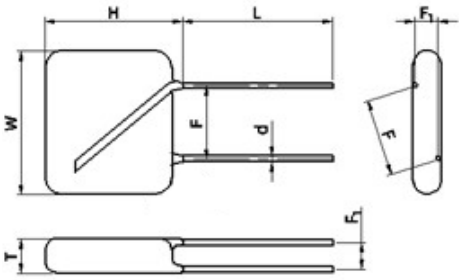

All Lead Wire A

Note:
The above data is for reference only.

All Rights Reserved by Xiamen SET Electronics Co., Ltd. 2024-2026 V1.1

Specification

Model	Max. Continuous Operating Voltage		Varistor Voltage @1 mA DC		Clamping Voltage (Max.)		Max. Discharge Current (8/20 μs)		Max. Energy (10/1000 μs)	Typical Capacitance (For reference only) @1 kHz	Agency Information			
	VAC	VDC	Min.	Max.	V_C	I_P	I_n	I_{max}	(J)	(pF)	UL	cUL	TUV	CQC
	(V)	(V)	(V)	(V)	(V)	(A)	(kA)	(kA)						
SFV25S220K	14	18	20	24	43	35	1.5	3	20	35000	●	●	○	○
SFV25S270K	17	22	24	31	53	35	3	6	33	30000	●	●	●	○
SFV25S330K	20	26	30	36	65	35	4	8	42	24500	●	●	●	○
SFV25S390K	25	31	35	43	77	35	4	8	49	21000	●	●	●	○
SFV25S470K	30	38	42	52	93	35	4	8	60	17250	●	●	●	○
SFV25S560K	35	45	50	62	110	35	5	10	72	14500	●	●	●	○
SFV25S680K	40	56	61	75	135	35	5	10	85	9500	●	●	●	○
SFV25S820K	50	65	74	90	135	175	10	25	98	8800	●	●	●	○
SFV25S101K	60	85	90	110	165	175	10	25	122	7200	●	●	●	○
SFV25S121K	75	100	108	132	200	175	10	25	146	6000	●	●	●	○
SFV25S151K	95	125	135	165	250	175	10	25	185	4400	●	●	●	○
SFV25S181K	115	150	162	198	300	175	10	25	218	3650	●	●	●	○
SFV25S201K	130	170	180	220	340	175	10	25	252	3300	●	●	●	○
SFV25S221K	140	180	198	242	360	175	10	25	280	3000	●	●	●	○
SFV25S241K	150	200	216	264	395	175	10	25	302	2800	●	●	●	○
SFV25S271K	175	225	243	297	455	175	10	25	340	2450	●	●	●	○
SFV25S301K	190	250	270	330	500	175	10	25	375	2200	●	●	●	○
SFV25S331K	210	275	297	363	550	175	10	25	410	2050	●	●	●	○
SFV25S361K	230	300	324	396	595	175	10	25	465	1850	●	●	●	○
SFV25S391K	250	320	351	429	650	175	10	25	520	1700	●	●	●	○
SFV25S431K	275	350	387	473	710	175	10	25	575	1600	●	●	●	○
SFV25S471K	300	385	423	517	775	175	10	25	630	1450	●	●	●	○
SFV25S511K	320	415	459	561	845	175	10	25	665	1300	●	●	●	○
SFV25S561K	350	460	504	616	925	175	10	25	720	1200	●	●	●	○
SFV25S621K	385	505	558	682	1025	175	10	25	790	1100	●	●	●	○
SFV25S681K	420	560	612	748	1120	175	10	25	790	1000	●	●	●	○
SFV25S751K	460	615	675	825	1240	175	10	25	825	900	●	●	●	○
SFV25S821K	510	670	738	902	1355	175	10	25	840	800	●	●	●	○
SFV25S911K	550	745	819	1001	1500	175	10	25	900	700	●	●	●	○
SFV25S102K	625	825	900	1100	1650	175	10	25	950	660	●	●	●	○
SFV25S112K	680	895	990	1210	1815	175	10	25	1040	615	●	●	●	○
SFV25S122K	750	1000	1080	1320	1980	175	10	25	1170	555	●	●	●	○

●: Approved ○: Unauthorized ● RoHS & REACH Compliant

All Rights Reserved by Xiamen SET Electronics Co., Ltd. 2024-2026 V1.1

Performance Curve (For reference only)

- Max. Peak Current Derating Curves

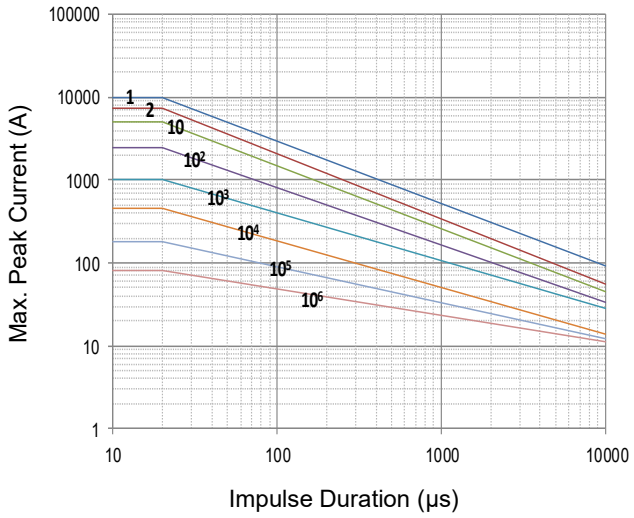

SFV25S220K to SFV25S680K

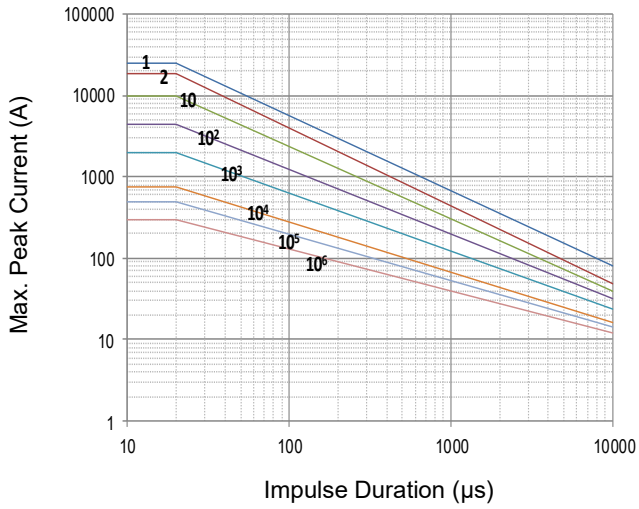

SFV25S820K to SFV25S122K

Note: 1, 2, 10, 10^2, 10^3, 10^4, 10^5, 10^6 Stand for Repetitions.

- Voltage-Current Characteristic Curves

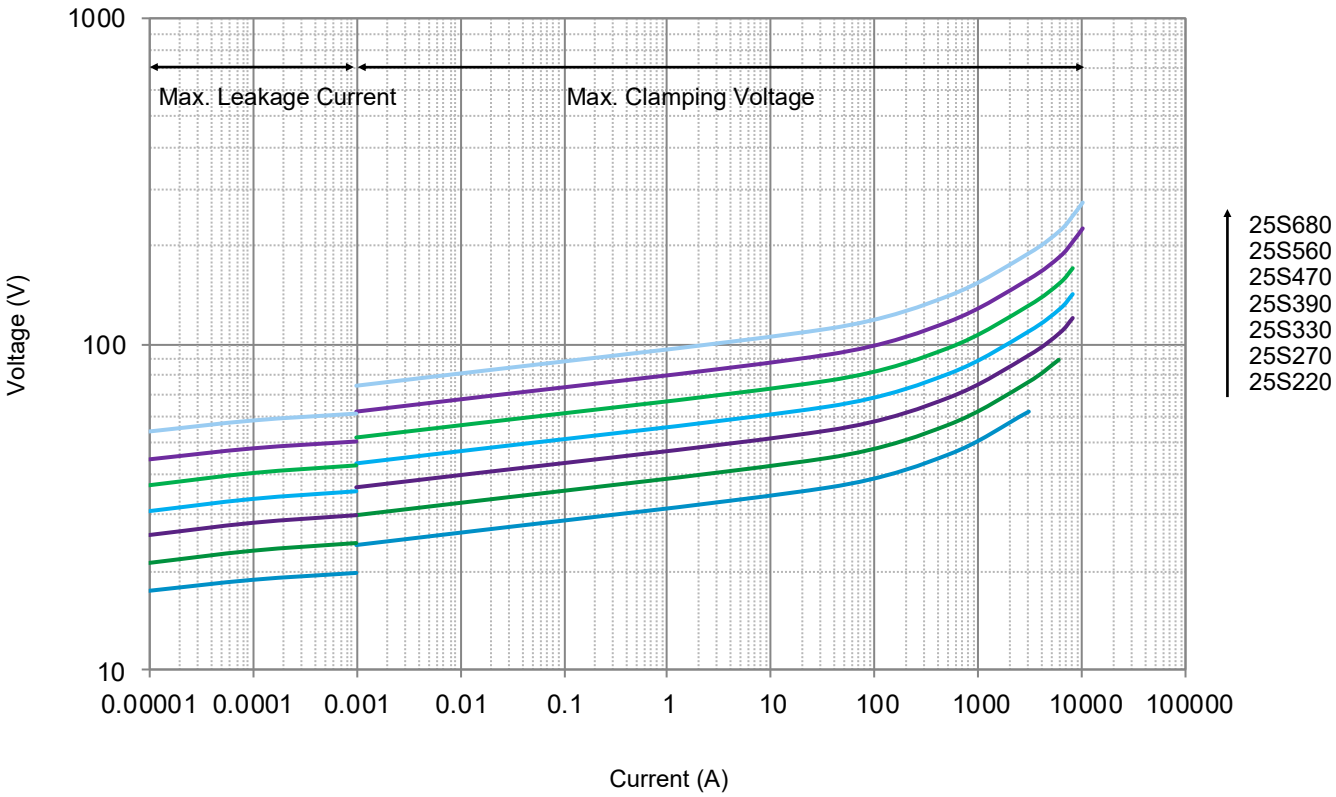

All Rights Reserved by Xiamen SET Electronics Co., Ltd. 2024-2026 V1.1

- Voltage-Current Characteristic Curves

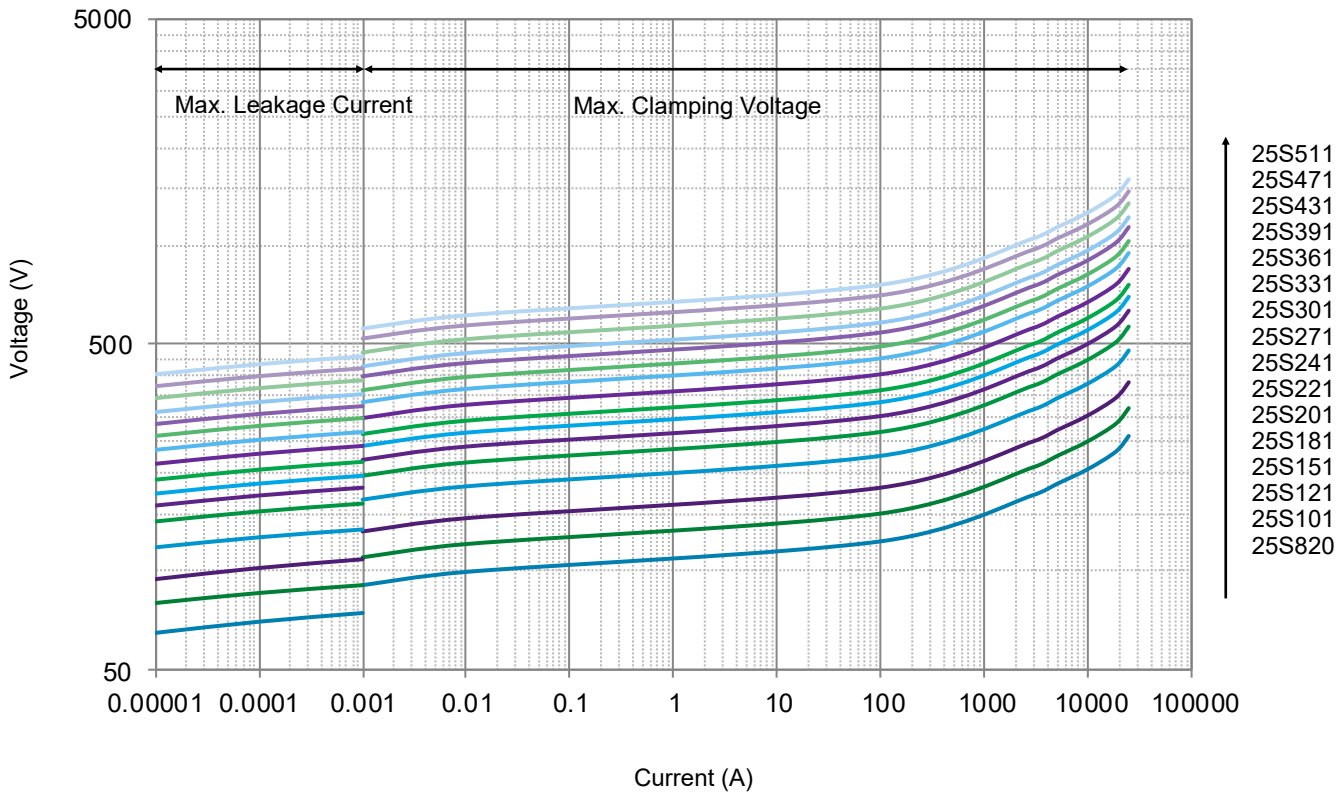

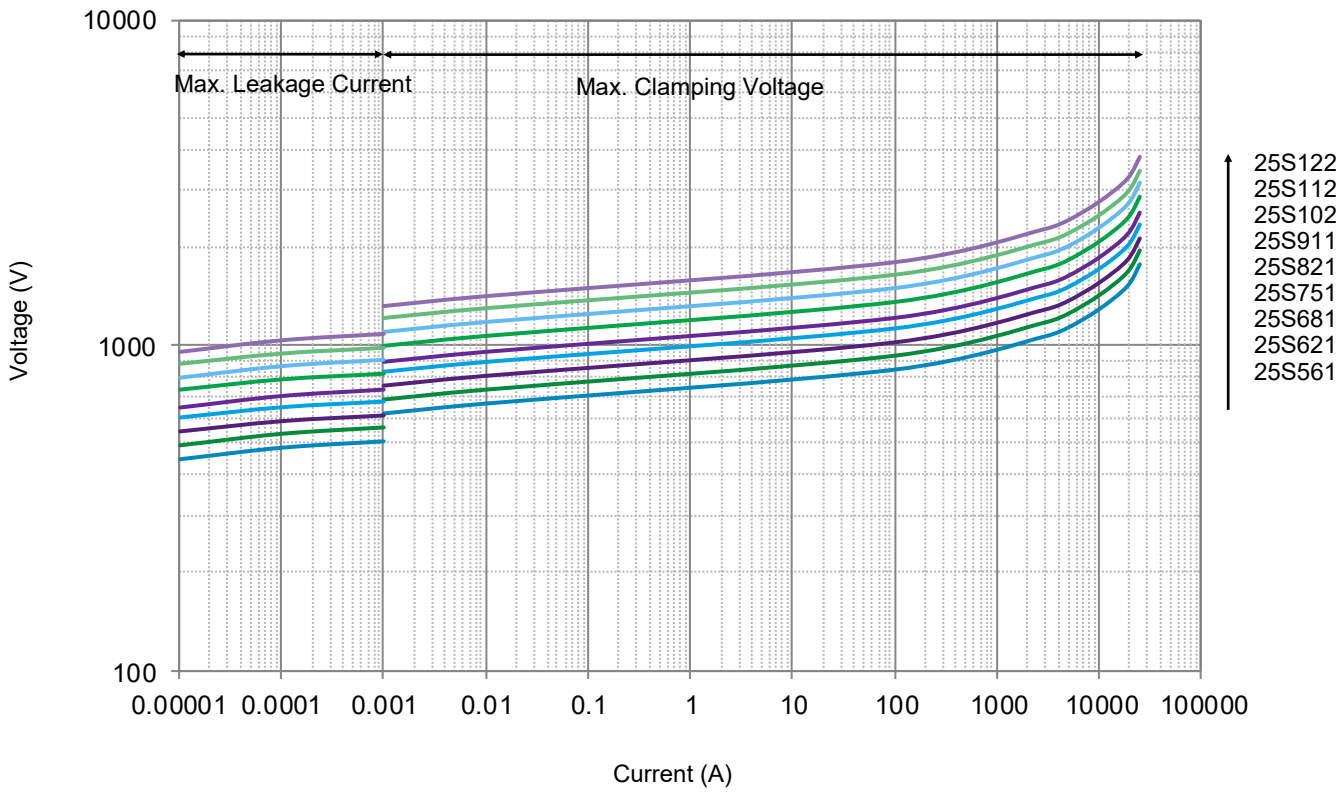

All Rights Reserved by Xiamen SET Electronics Co., Ltd. 2024-2026 V1.1

Packaging Information

- Bulk Packaging (Code: BUL)
- Bulk Packaging Quantity & Weight.

Series	Nominal Varistor Voltage	PE Bag	Box	Carton	G. W / Carton (365 × 265 × 245)
	(V)	(PCS)	(PCS)	(PCS)	(kg)±10%
SFV25S Series	220 ~ 821	100	200	1200	10 ~ 26
	911 ~ 122	80	160	960	23 ~ 28

Note:
Other lead length packaging information, please contact SETsafe | SETfuse.

All Dimensions in mm

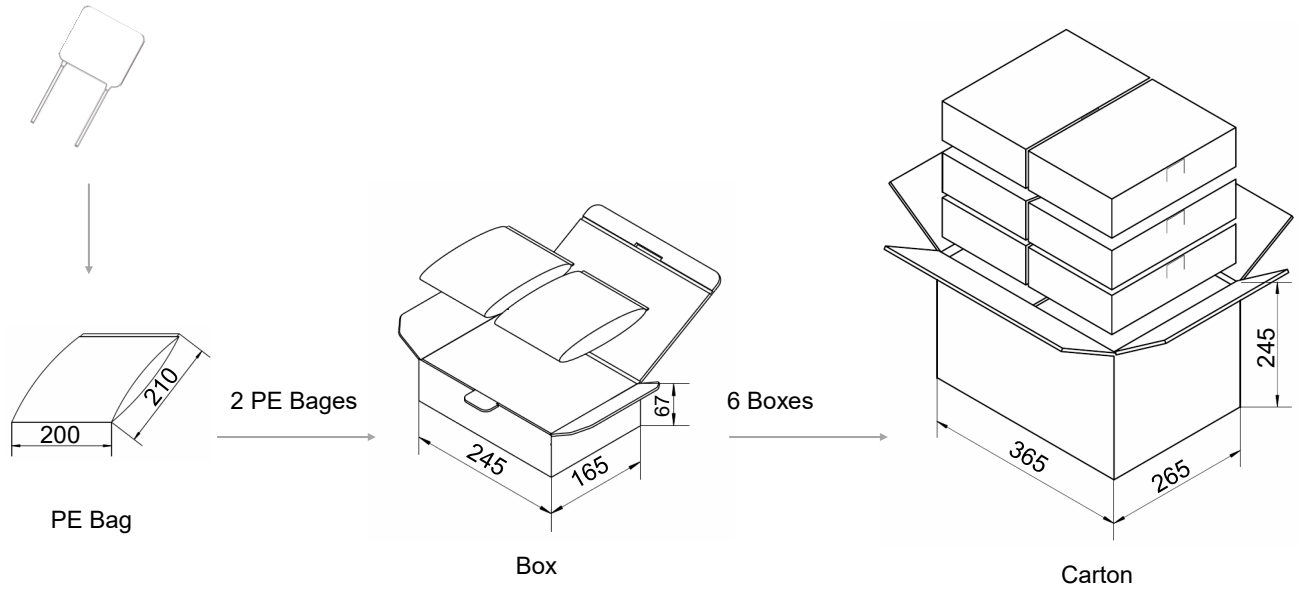

All Rights Reserved by Xiamen SET Electronics Co., Ltd. 2024-2026 V1.1

Dimensions (mm)

Straight Strap Lead

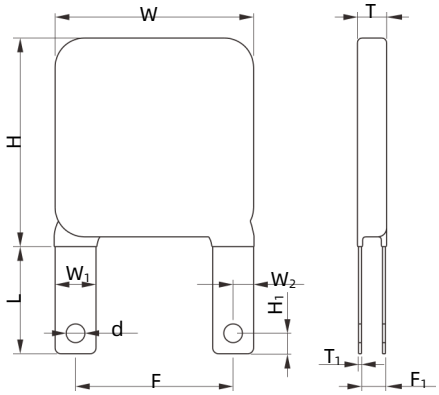

Model	L	W (Max.)	W_1	W_2	H (Max.)	H_1	T (Max.)	T_1	d	F	F_1
SFV34S470K	10.0±3.0	36	6.00±0.05	3.00±0.05	40	3.50±0.05	4.3	0.50±0.05	3.20±0.05	25.4±1.0	0.9 ~ 2.4
SFV34S560K	10.0±3.0	36	6.00±0.05	3.00±0.05	40	3.50±0.05	4.5	0.50±0.05	3.20±0.05	25.4±1.0	1.0 ~ 2.6
SFV34S680K	10.0±3.0	36	6.00±0.05	3.00±0.05	40	3.50±0.05	4.8	0.50±0.05	3.20±0.05	25.4±1.0	1.2 ~ 2.9
SFV34S820K	10.0±3.0	36	6.00±0.05	3.00±0.05	40	3.50±0.05	4.1	0.50±0.05	3.20±0.05	25.4±1.0	0.9 ~ 2.3
SFV34S101K	10.0±3.0	36	6.00±0.05	3.00±0.05	40	3.50±0.05	4.3	0.50±0.05	3.20±0.05	25.4±1.0	1.0 ~ 2.5
SFV34S121K	10.0±3.0	36	6.00±0.05	3.00±0.05	40	3.50±0.05	4.5	0.50±0.05	3.20±0.05	25.4±1.0	1.1 ~ 2.7
SFV34S151K	10.0±3.0	36	6.00±0.05	3.00±0.05	40	3.50±0.05	4.8	0.50±0.05	3.20±0.05	25.4±1.0	1.4 ~ 3.0
SFV34S181K	10.0±3.0	36	6.00±0.05	3.00±0.05	40	3.50±0.05	4.3	0.50±0.05	3.20±0.05	25.4±1.0	1.1 ~ 2.6
SFV34S201K	10.0±3.0	36	6.00±0.05	3.00±0.05	40	3.50±0.05	4.4	0.50±0.05	3.20±0.05	25.4±1.0	1.2 ~ 2.7
SFV34S221K	10.0±3.0	36	6.00±0.05	3.00±0.05	40	3.50±0.05	4.5	0.50±0.05	3.20±0.05	25.4±1.0	1.3 ~ 2.8
SFV34S241K	10.0±3.0	36	6.00±0.05	3.00±0.05	40	3.50±0.05	4.7	0.50±0.05	3.20±0.05	25.4±1.0	1.4 ~ 3.0
SFV34S271K	10.0±3.0	36	6.00±0.05	3.00±0.05	40	3.50±0.05	4.9	0.50±0.05	3.20±0.05	25.4±1.0	1.5 ~ 3.1
SFV34S301K	10.0±3.0	36	6.00±0.05	3.00±0.05	40	3.50±0.05	5.1	0.50±0.05	3.20±0.05	25.4±1.0	1.6 ~ 3.3
SFV34S331K	10.0±3.0	36	6.00±0.05	3.00±0.05	40	3.50±0.05	5.3	0.50±0.05	3.20±0.05	25.4±1.0	1.7 ~ 3.5
SFV34S361K	10.0±3.0	36	6.00±0.05	3.00±0.05	40	3.50±0.05	5.5	0.50±0.05	3.20±0.05	25.4±1.0	1.8 ~ 3.7
SFV34S391K	10.0±3.0	36	6.00±0.05	3.00±0.05	40	3.50±0.05	5.7	0.50±0.05	3.20±0.05	25.4±1.0	1.9 ~ 3.9
SFV34S431K	10.0±3.0	36	6.00±0.05	3.00±0.05	40	3.50±0.05	6.0	0.50±0.05	3.20±0.05	25.4±1.0	2.1 ~ 4.1
SFV34S471K	10.0±3.0	36	6.00±0.05	3.00±0.05	40	3.50±0.05	6.3	0.50±0.05	3.20±0.05	25.4±1.0	2.3 ~ 4.3
SFV34S511K	10.0±3.0	36	6.00±0.05	3.00±0.05	40	3.50±0.05	6.5	0.50±0.05	3.20±0.05	25.4±1.0	2.6 ~ 4.6
SFV34S561K	10.0±3.0	36	6.00±0.05	3.00±0.05	40	3.50±0.05	6.9	0.50±0.05	3.20±0.05	25.4±1.0	2.9 ~ 4.9
SFV34S621K	10.0±3.0	36	6.00±0.05	3.00±0.05	40	3.50±0.05	7.3	0.50±0.05	3.20±0.05	25.4±1.0	3.3 ~ 5.3
SFV34S681K	10.0±3.0	36	6.00±0.05	3.00±0.05	40	3.50±0.05	7.7	0.50±0.05	3.20±0.05	25.4±1.0	3.6 ~ 5.6
SFV34S751K	10.0±3.0	36	6.00±0.05	3.00±0.05	40	3.50±0.05	8.1	0.50±0.05	3.20±0.05	25.4±1.0	4.0 ~ 6.0
SFV34S821K	10.0±3.0	36	6.00±0.05	3.00±0.05	40	3.50±0.05	8.6	0.50±0.05	3.20±0.05	25.4±1.0	4.5 ~ 6.5
SFV34S911K	10.0±3.0	36	6.00±0.05	3.00±0.05	40	3.50±0.05	9.2	0.50±0.05	3.20±0.05	25.4±1.0	5.0 ~ 7.0
SFV34S102K	10.0±3.0	36	6.00±0.05	3.00±0.05	40	3.50±0.05	9.8	0.50±0.05	3.20±0.05	25.4±1.0	5.6 ~ 7.6
SFV34S112K	10.0±3.0	36	6.00±0.05	3.00±0.05	40	3.50±0.05	10.5	0.50±0.05	3.20±0.05	25.4±1.0	6.2 ~ 8.2
SFV34S122K	10.0±3.0	36	6.00±0.05	3.00±0.05	40	3.50±0.05	11.1	0.50±0.05	3.20±0.05	25.4±1.0	6.8 ~ 8.8

All Rights Reserved by Xiamen SET Electronics Co., Ltd. 2024-2026 V1.1

Specification

Model	Max. Continuous Operating Voltage		Varistor Voltage @1 mA DC		Clamping Voltage (Max.)		Max. Discharge Current (8/20 μs)		Max. Energy (10/1000 μs)	Typical Capacitance (For reference only) @1 kHz	Agency Information			
	VAC	VDC	Min.	Max.	V_C	I_P	I_n	I_{max}	(J)	(pF)	UL	cUL	TUV	CQC
	(V)	(V)	(V)	(V)	(V)	(A)	(kA)	(kA)						
SFV34S470K	30	38	42	52	93	60	10	20	96	35000	●	●	●	○
SFV34S560K	35	45	50	62	110	60	10	20	115	29500	●	●	●	○
SFV34S680K	40	56	61	75	135	60	10	20	136	24200	●	●	●	○
SFV34S820K	50	65	74	90	135	300	20	40	156	17950	●	●	●	○
SFV34S101K	60	85	90	110	165	300	20	40	195	15000	●	●	●	○
SFV34S121K	75	100	108	132	200	300	20	40	235	12200	●	●	●	○
SFV34S151K	95	125	135	165	250	300	20	40	296	10000	●	●	●	○
SFV34S181K	115	150	162	198	300	300	20	40	350	8250	●	●	●	○
SFV34S201K	130	170	180	220	340	300	20	40	400	6750	●	●	●	○
SFV34S221K	140	180	198	242	360	300	20	40	450	6400	●	●	●	○
SFV34S241K	150	200	216	264	395	300	20	40	480	5650	●	●	●	○
SFV34S271K	175	225	243	297	455	300	20	40	540	5100	●	●	●	○
SFV34S301K	190	250	270	330	500	300	20	40	600	4510	●	●	●	○
SFV34S331K	210	275	297	363	550	300	20	40	656	4150	●	●	●	○
SFV34S361K	230	300	324	396	595	300	20	40	745	3750	●	●	●	○
SFV34S391K	250	320	351	429	650	300	20	40	830	3500	●	●	●	○
SFV34S431K	275	350	387	473	710	300	20	40	920	2950	●	●	●	○
SFV34S471K	300	385	423	517	775	300	20	40	1000	2880	●	●	●	○
SFV34S511K	320	415	459	561	845	300	20	40	1060	2650	●	●	●	○
SFV34S561K	350	460	504	616	925	300	20	40	1150	2450	●	●	●	○
SFV34S621K	385	505	558	682	1025	300	20	40	1250	2200	●	●	●	○
SFV34S681K	420	560	612	748	1120	300	20	40	1250	2000	●	●	●	○
SFV34S751K	460	615	675	825	1240	300	20	40	1280	1820	●	●	●	○
SFV34S821K	510	670	738	902	1355	300	20	40	1300	1800	●	●	●	○
SFV34S911K	550	745	819	1001	1500	300	20	40	1475	1500	●	●	●	○
SFV34S102K	625	825	900	1100	1650	300	20	40	1550	1350	●	●	●	○
SFV34S112K	680	895	990	1210	1815	300	20	40	1750	1230	●	●	●	○
SFV34S122K	750	1000	1080	1320	1980	300	20	40	2000	1135	●	●	●	○

●: Approved ○: Unauthorized ● RoHS & REACH Compliant

All Rights Reserved by Xiamen SET Electronics Co., Ltd. 2024-2026 V1.1

Performance Curve (For reference only)

- Max. Peak Current Derating Curves

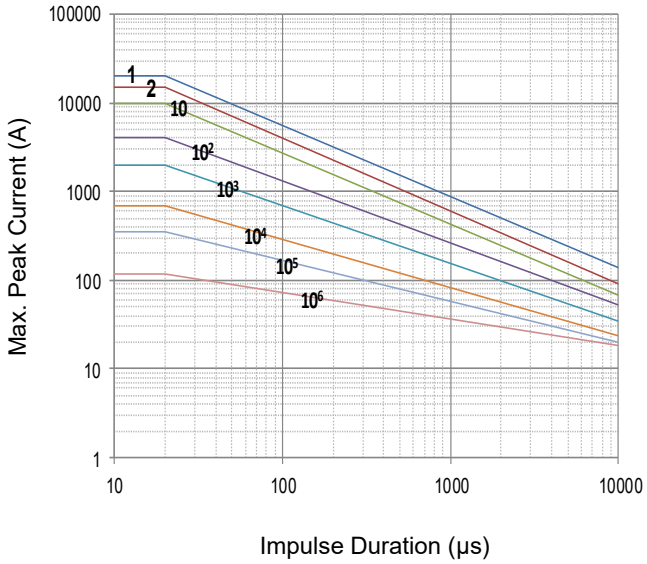

34S470K to 34S680K

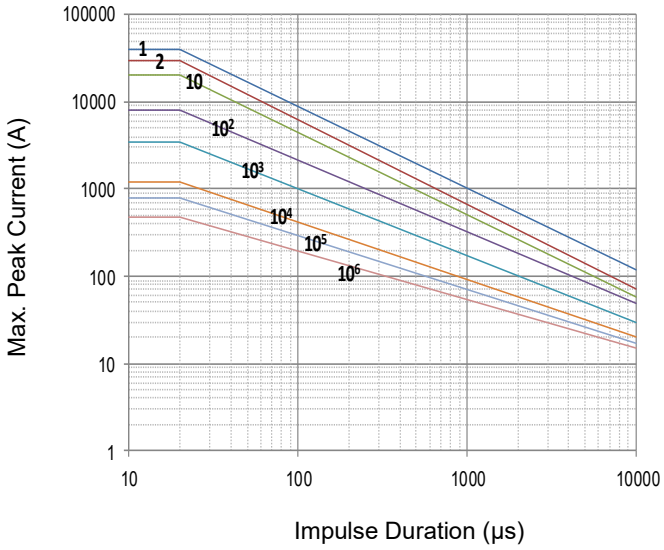

34S820K to 34S122K

Note: 1, 2, 10, 10^2, 10^3, 10^4, 10^5, 10^6 Stand for Repetitions.

- Voltage-Current Characteristic Curves

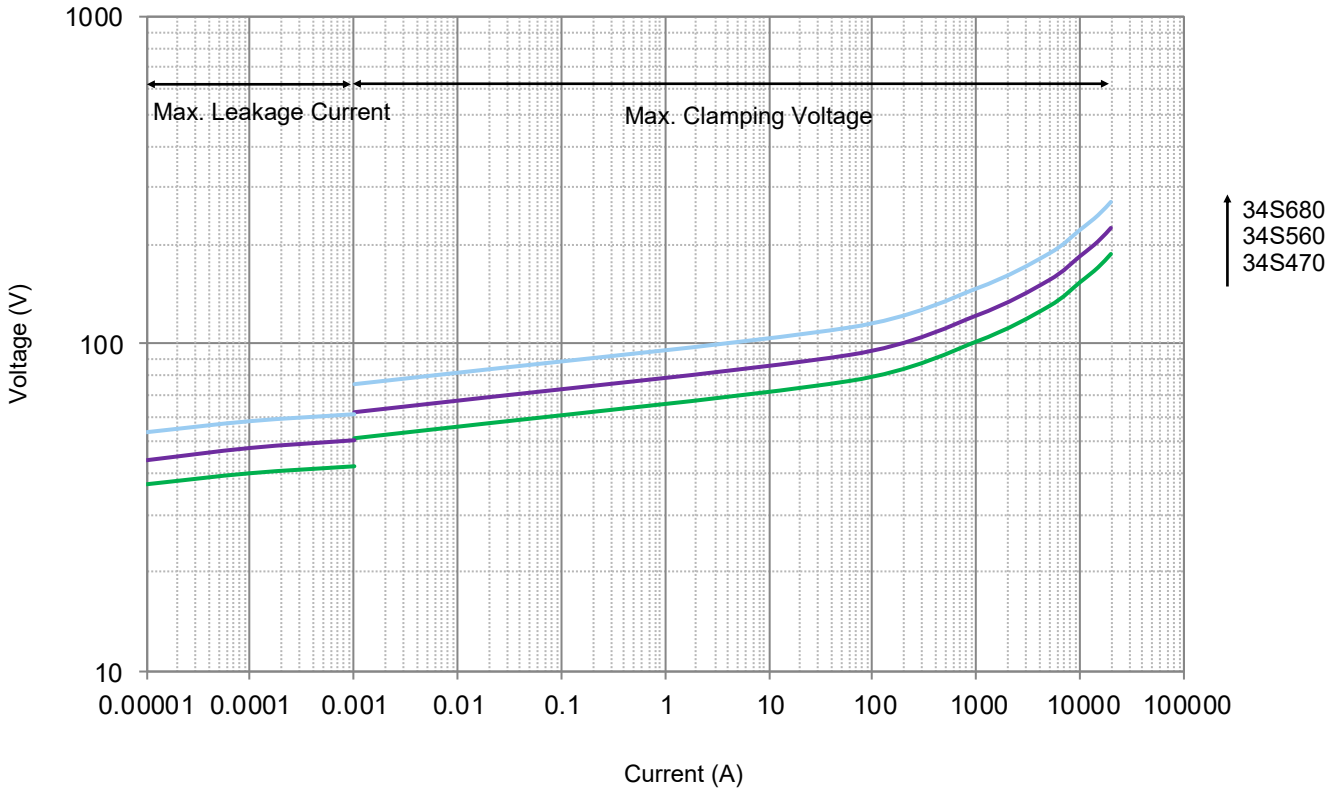

All Rights Reserved by Xiamen SET Electronics Co., Ltd. 2024-2026 V1.1

- Voltage-Current Characteristic Curves

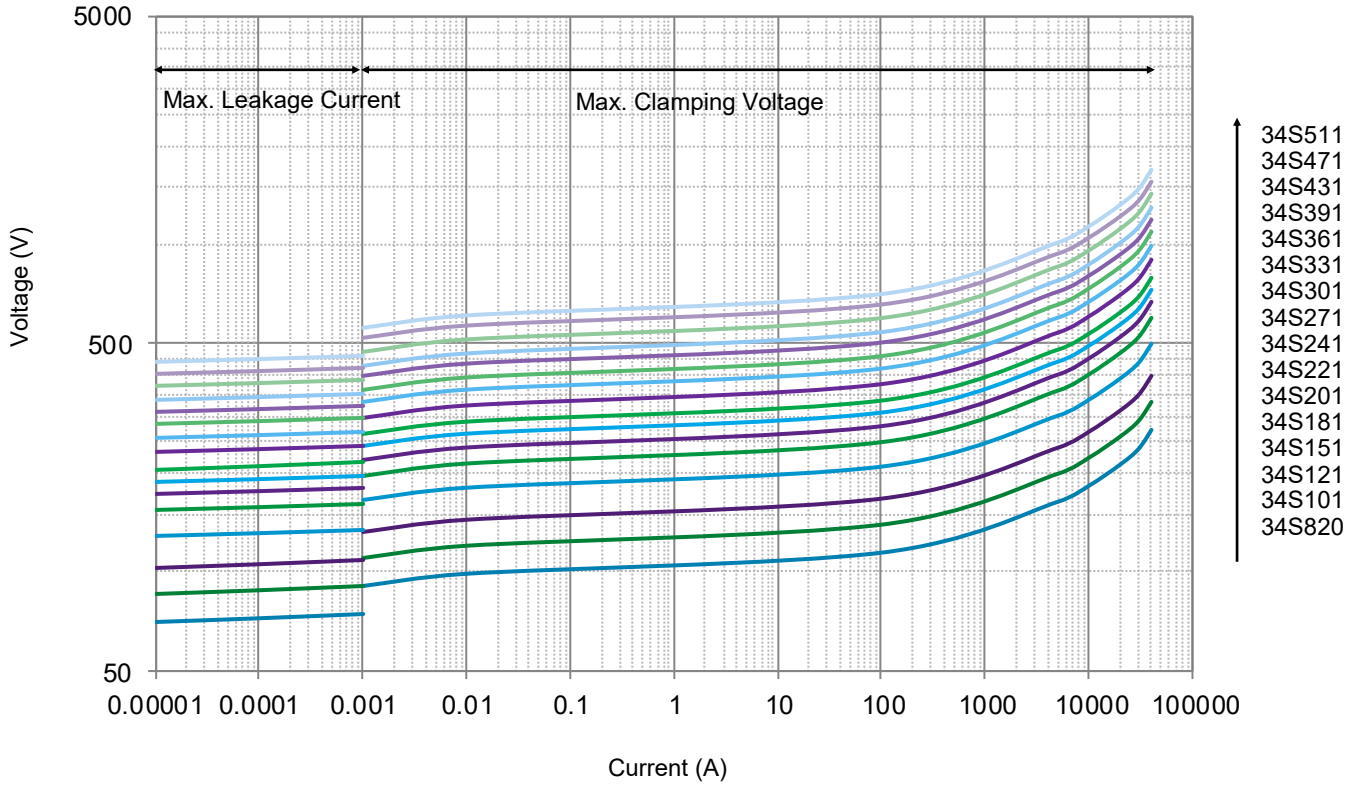

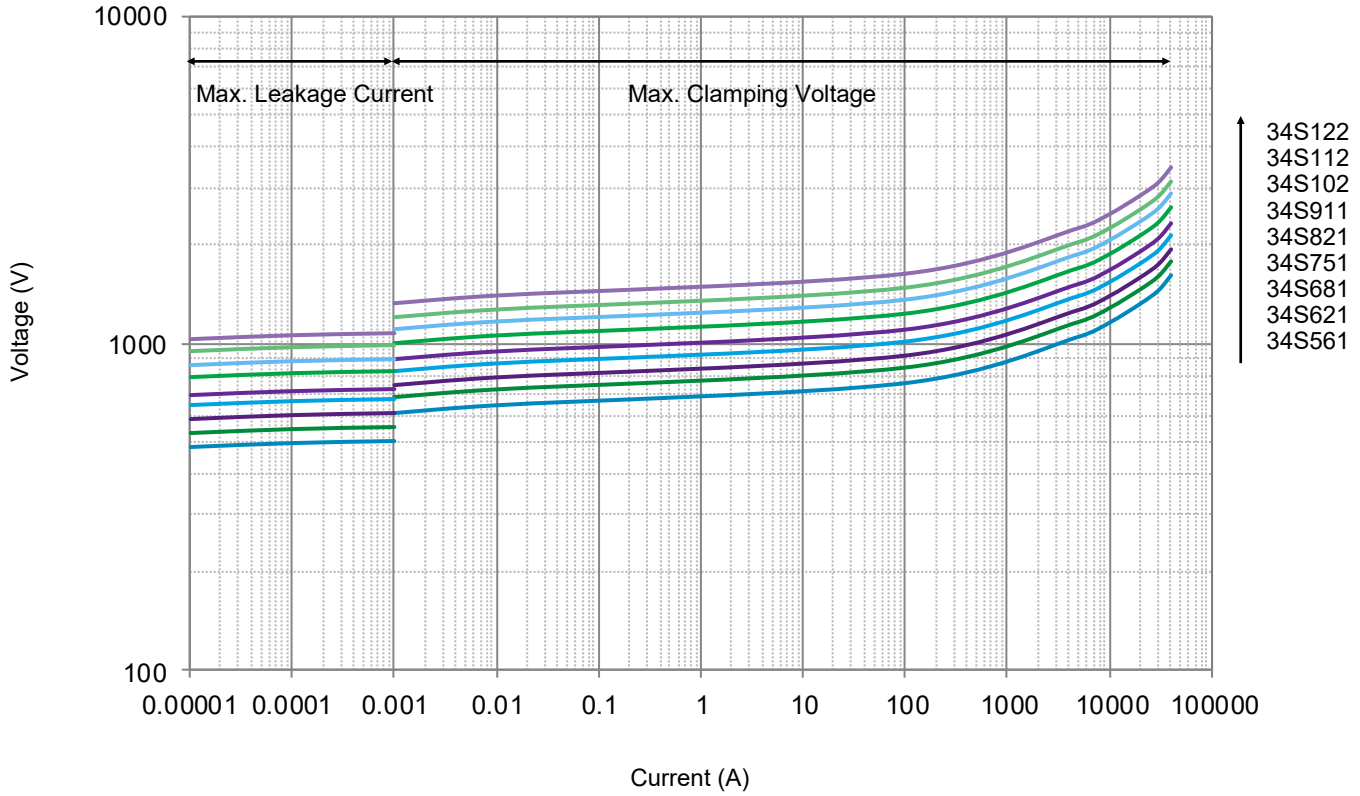

All Rights Reserved by Xiamen SET Electronics Co., Ltd. 2024-2026 V1.1

Packaging Information

- Bulk Packaging (Code: BUL)
- Bulk Packaging Quantity & Weight.

Series	Nominal Varistor Voltage	PE Bag	Box	Carton	G. W / Carton (365 × 265 × 245)
SFV34S Series	(V)	(PCS)	(PCS)	(PCS)	(kg)±10%
	220 ~ 301	40	80	480	9 ~ 10
	331 ~ 821	30	60	360	7 ~ 14
	911 ~ 122	20	40	240	10 ~ 13

Note:
Other lead length packaging information, please contact SETsafe | SETfuse.

All Dimensions in mm

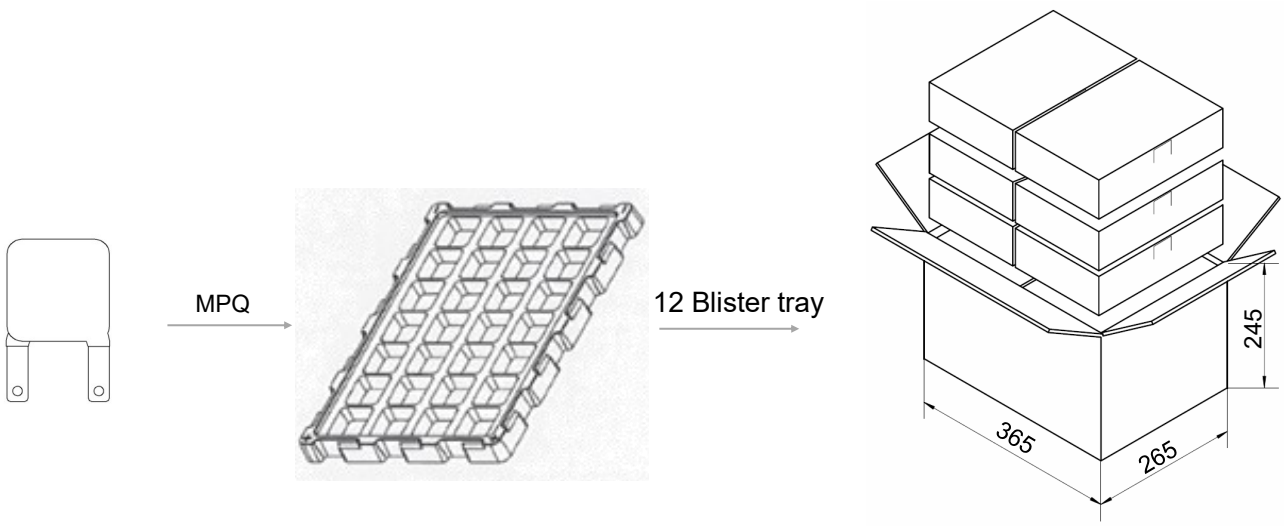

Carton

All Rights Reserved by Xiamen SET Electronics Co., Ltd. 2024-2026 V1.1

Specification

Model	Max. Continuous Operating Voltage		Varistor Voltage @1 mA DC		Clamping Voltage (Max.)		Max. Discharge Current (8/20 μs)		Max. Energy (10/1000 μs)	Typical Capacitance (For reference only) @1 kHz	T	Agency Information	
	VAC	VDC	Min.	Max.	V_C	I_P	I_n	I_{max}	(J)	(pF)	(mm)	UL	cUL
	(V)	(V)	(V)	(V)	(V)	(A)	(kA)	(kA)					
YMJ20S820K	50	65	74	90	135	125	8	15	67	5880	0.7 - 1.0	●	●
YMJ20S101K	60	85	90	110	165	125	8	15	84	4800	0.8 - 1.2	●	●
YMJ20S121K	75	100	108	132	200	125	8	15	102	4000	1.0 - 1.4	●	●
YMJ20S151K	95	125	135	165	250	125	8	15	127	3200	1.2 - 1.8	●	●
YMJ20S181K	115	150	162	198	300	125	8	15	156	2650	0.9 - 1.2	●	●
YMJ20S201K	130	170	180	220	340	125	8	15	170	2400	1.0 - 1.3	●	●
YMJ20S221K	140	180	198	242	360	125	8	15	185	2160	1.1 - 1.4	●	●
YMJ20S241K	150	200	216	264	395	125	8	15	200	2000	1.2 - 1.6	●	●
YMJ20S271K	175	225	243	297	455	125	8	15	230	1800	1.4 - 1.7	●	●
YMJ20S301K	190	250	270	330	500	125	8	15	250	1560	1.5 - 1.9	●	●
YMJ20S331K	210	275	297	363	550	125	8	15	270	1440	1.7 - 2.1	●	●
YMJ20S361K	230	300	324	396	595	125	8	15	305	1320	1.8 - 2.3	●	●
YMJ20S391K	250	320	351	429	650	125	8	15	330	1200	2.0 - 2.5	●	●
YMJ20S431K	275	350	387	473	710	125	8	15	365	1160	2.2 - 2.7	●	●
YMJ20S471K	300	385	423	517	775	125	8	15	420	1020	2.4 - 3.0	●	●
YMJ20S511K	320	415	459	561	845	125	8	15	430	935	2.6 - 3.2	●	●
YMJ20S561K	350	460	504	616	925	125	8	15	455	850	2.9 - 3.5	●	●
YMJ20S621K	385	505	558	682	1025	125	8	15	465	780	3.2 - 3.9	●	●
YMJ20S681K	420	560	612	748	1120	125	8	15	480	720	3.5 - 4.3	●	●
YMJ20S751K	460	615	675	825	1240	125	8	15	500	635	3.9 - 4.7	●	●
YMJ20S821K	510	670	738	902	1355	125	8	15	520	600	4.3 - 5.2	●	●
YMJ20S911K	550	745	819	1001	1500	125	8	15	550	525	4.7 - 5.7	●	●
YMJ20S102K	625	825	900	1100	1650	125	8	15	610	480	5.2 - 6.3	●	●
YMJ20S112K	680	895	990	1210	1815	125	8	15	675	430	5.7 - 6.9	●	●
YMJ20S122K	750	1000	1080	1320	1980	125	8	15	740	380	6.3 - 7.5	●	●

●: Approved ○: Unauthorized ● RoHS & REACH Compliant

All Rights Reserved by Xiamen SET Electronics Co., Ltd. 2024-2026 V1.1

Specification

Model	Max. Continuous Operating Voltage		Varistor Voltage @1 mA DC		Clamping Voltage (Max.)		Max. Discharge Current (8/20 μs)		Max. Energy (10/1000 μs)	Typical Capacitance (For reference only) @1 kHz	T	Agency Information	
	VAC	VDC	Min.	Max.	V_C	I_P	I_n	I_{max}	(J)	(pF)	(mm)	UL	cUL
	(V)	(V)	(V)	(V)	(V)	(A)	(kA)	(kA)					
YMJ25S820K	50	65	74	90	135	175	10	25	98	8800	0.7 - 1.0	●	●
YMJ25S101K	60	85	90	110	165	175	10	25	122	7200	0.8 - 1.2	●	●
YMJ25S121K	75	100	108	132	200	175	10	25	146	6000	1.0 - 1.5	●	●
YMJ25S151K	95	125	135	165	250	175	10	25	185	4400	1.2 - 1.9	●	●
YMJ25S181K	115	150	162	198	300	175	10	25	218	3650	0.9 - 1.2	●	●
YMJ25S201K	130	170	180	220	340	175	10	25	252	3300	1.0 - 1.3	●	●
YMJ25S221K	140	180	198	242	360	175	10	25	280	3000	1.1 - 1.4	●	●
YMJ25S241K	150	200	216	264	395	175	10	25	302	2800	1.2 - 1.6	●	●
YMJ25S271K	175	225	243	297	455	175	10	25	340	2450	1.4 - 1.7	●	●
YMJ25S301K	190	250	270	330	500	175	10	25	375	2200	1.5 - 1.9	●	●
YMJ25S331K	210	275	297	363	550	175	10	25	410	2050	1.7 - 2.1	●	●
YMJ25S361K	230	300	324	396	595	175	10	25	465	1850	1.8 - 2.3	●	●
YMJ25S391K	250	320	351	429	650	175	10	25	520	1700	2.0 - 2.5	●	●
YMJ25S431K	275	350	387	473	710	175	10	25	575	1600	2.2 - 2.7	●	●
YMJ25S471K	300	385	423	517	775	175	10	25	630	1450	2.4 - 3.0	●	●
YMJ25S511K	320	415	459	561	845	175	10	25	665	1300	2.6 - 3.2	●	●
YMJ25S561K	350	460	504	616	925	175	10	25	720	1200	2.9 - 3.5	●	●
YMJ25S621K	385	505	558	682	1025	175	10	25	790	1100	3.2 - 3.9	●	●
YMJ25S681K	420	560	612	748	1120	175	10	25	790	1000	3.5 - 4.3	●	●
YMJ25S751K	460	615	675	825	1240	175	10	25	825	900	3.9 - 4.7	●	●
YMJ25S821K	510	670	738	902	1355	175	10	25	840	800	4.3 - 5.2	●	●
YMJ25S911K	550	745	819	1001	1500	175	10	25	900	700	4.7 - 5.7	●	●
YMJ25S102K	625	825	900	1100	1650	175	10	25	950	660	5.2 - 6.3	●	●
YMJ25S112K	680	895	990	1210	1815	175	10	25	1040	615	5.7 - 6.9	●	●
YMJ25S122K	750	1000	1080	1320	1980	175	10	25	1170	555	6.3 - 7.5	●	●

●: Approved ○: Unauthorized ● RoHS & REACH Compliant

All Rights Reserved by Xiamen SET Electronics Co., Ltd. 2024-2026 V1.1

Specification

Model	Max. Continuous Operating Voltage		Varistor Voltage @1 mA DC		Clamping Voltage (Max.)		Max. Discharge Current (8/20 μs)		Max. Energy (10/1000 μs)	Typical Capacitance (For reference only) @1 kHz	T	Agency Information	
	VAC	VDC	Min.	Max.	V_C	I_P	I_n	I_{max}	(J)	(pF)	(mm)	UL	cUL
	(V)	(V)	(V)	(V)	(V)	(A)	(kA)	(kA)					
YMJ34S820K	50	65	74	90	135	300	20	40	156	17950	0.7 ~ 1.1	●	●
YMJ34S101K	60	85	90	110	165	300	20	40	195	15000	0.8 ~ 1.2	●	●
YMJ34S121K	75	100	108	132	200	300	20	40	235	12200	1.0 ~ 1.5	●	●
YMJ34S151K	95	125	135	165	250	300	20	40	296	10000	1.2 ~ 1.9	●	●
YMJ34S181K	115	150	162	198	300	300	20	40	350	8250	0.9 ~ 1.2	●	●
YMJ34S201K	130	170	180	220	340	300	20	40	400	6750	1.0 ~ 1.3	●	●
YMJ34S221K	140	180	198	242	360	300	20	40	450	6400	1.1 ~ 1.5	●	●
YMJ34S241K	150	200	216	264	395	300	20	40	480	5650	1.2 ~ 1.6	●	●
YMJ34S271K	175	225	243	297	455	300	20	40	540	5100	1.4 ~ 1.8	●	●
YMJ34S301K	190	250	270	330	500	300	20	40	600	4510	1.5 ~ 2.0	●	●
YMJ34S331K	210	275	297	363	550	300	20	40	656	4150	1.7 ~ 2.2	●	●
YMJ34S361K	230	300	324	396	595	300	20	40	745	3750	1.9 ~ 2.4	●	●
YMJ34S391K	250	320	351	429	650	300	20	40	830	3500	2.1 ~ 2.6	●	●
YMJ34S431K	275	350	387	473	710	300	20	40	920	2950	2.2 ~ 2.8	●	●
YMJ34S471K	300	385	423	517	775	300	20	40	1000	2880	2.4 ~ 3.1	●	●
YMJ34S511K	320	415	459	561	845	300	20	40	1060	2650	2.6 ~ 3.3	●	●
YMJ34S561K	350	460	504	616	925	300	20	40	1150	2450	2.9 ~ 3.7	●	●
YMJ34S621K	385	505	558	682	1025	300	20	40	1250	2200	3.2 ~ 4.0	●	●
YMJ34S681K	420	560	612	748	1120	300	20	40	1250	2000	3.5 ~ 4.4	●	●
YMJ34S751K	460	615	675	825	1240	300	20	40	1280	1820	3.9 ~ 4.9	●	●
YMJ34S821K	510	670	738	902	1355	300	20	40	1300	1800	4.3 ~ 5.3	●	●
YMJ34S911K	550	745	819	1001	1500	300	20	40	1475	1500	4.8 ~ 5.9	●	●
YMJ34S102K	625	825	900	1100	1650	300	20	40	1550	1350	5.2 ~ 6.5	●	●
YMJ34S112K	680	895	990	1210	1815	300	20	40	1750	1230	5.8 ~ 7.1	●	●
YMJ34S122K	750	1000	1080	1320	1980	300	20	40	2000	1135	6.3 ~ 7.8	●	●

●: Approved ○: Unauthorized ● RoHS & REACH Compliant

All Rights Reserved by Xiamen SET Electronics Co., Ltd. 2024-2026 V1.1

21

21 YEARS OF DESIGNING, MANUFACTURING AND SELLING OF CIRCUIT PROTECTION COMPONENTS

>40

SOLD TO MORE THAN 40 COUNTRIES AND REGIONS

Automatic

AUTOMATIC PROCESS PRODUCTION

500

A BRAND CHOSEN BY FORTUNE 500 COMPANIES

INNOVATIVE DESIGN
ORIGINAL MANUFACTURING
WORLD-CLASS MANUFACTURING

NO. 8067, 8001 West Xiang'an Road,Torch High-tech industrial District,Xiang'an 361101 Xiamen P.R. China
www.SETsafe.com www.SETfuse.com
Tel:+ 86-592-5715-838 sales@SETfuse.com

SET safe | SET fuse

All Rights Reserved by Xiamen SET Electronics Co., Ltd. 2021-2023