SPD

Signaling Networks

- Hot-plug Module
- DIN Rail 35 mm Installation
- Pluggable Module for Easy Replacement
- Small Size
- Comply with IEC 61643-21

SET safe | SET fuse

Providing a Total Solution for High Standard Safety Circuit Protection

SPD for Signal Network

- Surveillance Camera
- POE Equipment
- Switch
- Control System Interface
- Instrument

All Rights Reserved by Xiamen SET Electronics Co., Ltd. 2021-2023 V2.0

Glossary

Item	Description
U_c	**Maximum Continuous Operating Voltage** Maximum voltage (d.c. or r.m.s.) which may be continuously applied to SPD terminals without causing any degradation in the transmission characteristics of the SPD — (IEC 61643-21)
8/20 μs	**8/20 Current Impulse** Current impulse with a nominal virtual front time of 8 μs and a nominal time to half-value of 20 μs.
I_n	**Nominal Discharge Current** Crest value of the current through the SPD having a current waveshape of 8/20 — (IEC 61643-21)
I_L	**Rated Current** Maximum current a current-limiting SPD can conduct continuously with no change in the impedance of the current-limiting components — (IEC 61643-21)
U_p	**Voltage Protection Level** Parameter that characterizes the performance of the SPD in limiting the voltage across its terminals. This value of voltage is greater than the highest measured value of impulse-limiting voltage and is specified by the manufacturer. — (IEC 61643-21)
IP	**Degrees of Protection Provided by Enclosure (IP Code)** Classification preceded by the symbol IP indicating the extent of protection provided by an enclosure against access to hazardous parts, against ingress of solid foreign objects and possibly harmful ingress of water.

SPD

All Rights Reserved by Xiamen SET Electronics Co., Ltd. 2021-2023 V2.0

ATTENTION

Usage

1. The voltage applied continuously to the SPD must not exceed its maximum continuous operating voltage U_c.
2. When atmosphere press is from 80 kPa to 106 kPa, the related altitude shall be from 2000 m to - 500 m.
3. Do not touch the product body or wires directly when power is on, to avoid electric shock.

Replacement

As SPD is a non-repairable product, for safety sake, please use the same type of SPD for replacement.

Storage

Do not store SPD at high temperature, high humidity or corrosive gas environment, to avoid oxidation of the wires. Use them up within 2 years after receiving the goods.

Installation

1. Installation and startup may only be carried out by qualified personnel. The relevant country-specific regulations must be observed.
2. Check the device for external damage before installation. If the device is defective, it must not be used.
3. Pay attention to risk of electric shock. Please cutoff all electrical power before installation or service.
4. Lay the output cables to the surge protective devices (SPDs) as short as possible, without loops.
5. Do not apply mechanical stress to the SPD body during or after the installation.

Maintenance

1. Check SPD status according to instructions before and after the thunderstorm season each year.
2. Ensure electrical connections and mountings are correct before energizing the circuit.
3. SPD`s quality is well controlled and strictly inspected before delivery. If non-functional ones are found during operation, please contact us early enough.

All Rights Reserved by Xiamen SET Electronics Co., Ltd. 2021-2023 V2.0

Features

- Hot-plug Module
- DIN Rail 35 mm Installation
- Pluggable Module for Easy Replacement
- Small Size

Schematics

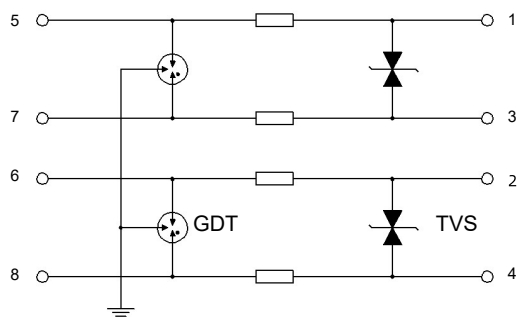

Dimensions (mm)

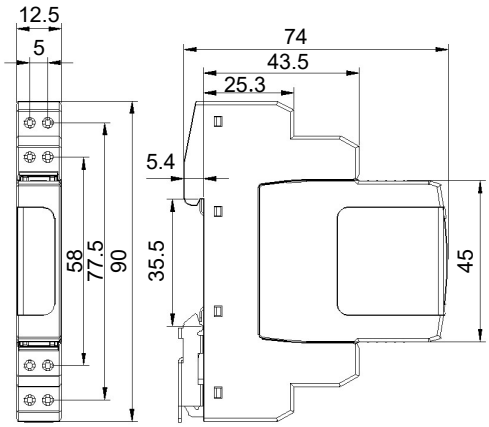

Features		Specifications		
Model		SSPA0K5BT05	SSPA0K5BT12	SSPA0K5BT24
Nominal System Voltage (U_n)		5 VDC	12 VDC	24 VDC
Max. Continuous Operating Voltage (U_c)		6 VDC	15 VDC	33 VDC
Nominal Discharge Current (8/20 μs) (I_n)		5 kA	5 kA	5 kA
Rated Current (I_L)		1.0 A	1.0 A	1.0 A
Voltage Protection Level (U_p)	Line to Line @In	≤ 15 V	≤ 27 V	≤ 55 V
	Line to PE @In	≤ 600 V	≤ 600 V	≤ 600 V
Cut-off frequency		10 MHz		
Wiring Ability		(0.2 to 2.5) mm^2 (Flexible) / (0.2 to 0.4) mm^2 (Rigid)		
Degrees of Protection		IP20		
Installation		DIN rail 35 mm		
Standard		IEC/EN 61643-21, GB/T 18802.21		
Operational Temperature Range		(-40 to 85) °C		

All Rights Reserved by Xiamen SET Electronics Co., Ltd. 2021-2023 V2.0

21

21 YEARS OF DESIGNING, MANUFACTURING AND SELLING OF CIRCUIT PROTECTION COMPONENTS

>40

SOLD TO MORE THAN 40 COUNTRIES AND REGIONS

Automatic

AUTOMATIC PROCESS PRODUCTION

500

A BRAND CHOSEN BY FORTUNE 500 COMPANIES

INNOVATIVE DESIGN
ORIGINAL MANUFACTURING
WORLD-CLASS MANUFACTURING

NO. 8067, 8001 West Xiang'an Road,Torch High-tech industrial District,Xiang'an 361101 Xiamen P.R. China
www.SETsafe.com www.SETfuse.com
Tel:+ 86-592-5715-838 sales@SETfuse.com

SET safe | SET fuse

All Rights Reserved by Xiamen SET Electronics Co., Ltd. 2021-2023